Hitachi Construction Machinery Co., Ltd.
URL:http://www.hitachi-c-m.com

PRINTED IN THE NETHERLANDS 2021, 12

ZX 120-7 • 160-7 • 180-7 • 200-7 • 240-7 • 300-7 • 330-7 class HYDRAULIC EXCAVATOR OPERATOR'S MANUAL ENMDFY-EN2-3

PART NO. ENMDFY-EN2-3

HITACHI

Reliable solutions

Operator's Manual

ZAXIS

120-7 class
130-7 · 130LCN-7

160-7 class
160LC-7

180-7 class
180LC-7 · 180LCN-7

200-7 class
210LC-7 · 210LCN-7 · 240N-7

240-7 class
250LC-7 · 250LCN-7

300-7 class
300LC-7 · 300LCN-7

330-7 class
350LC-7 · 350LCN-7

Hydraulic Excavator

Serial No.
ZX120-7 class 90001 and up
ZX160-7, 180-7, 200-7 class 500001 and up
ZX240-7 class 70001 and up
ZX300-7 class 80001 and up
ZX330-7 class 90001 and up

CALIFORNIA

Proposition 65 Warning

Diesel engine exhaust and some of its constituents are known to the State of California to cause cancer, birth defects, and other reproductive harm.

INTRODUCTION

Read this manual carefully to learn how to operate and service your machine correctly. Failure to do so could result in personal injury or machine damage.

This standard specification machine can be operated under the following conditions without being modified.
Atmospheric Temperature: –20 °C to 40 °C (–4 °F to 104 °F) Altitude: 0 m to 2000 m (0 ft to 6600 ft)

In case the machine is used under conditions other than described above, consult your authorized dealer.

This manual should be considered a permanent part of your machine and should remain with the machine when you sell it.

This machine is of metric design. Measurements in this manual are metric. Use only metric hardware and tools as specified.

Right-hand and left-hand sides are determined by facing in the direction of forward travel.

Write product identification numbers in the Machine Numbers section. Accurately record all the numbers to help in tracing the machine should it be stolen. Your dealer also needs these numbers when you order parts. If this manual is kept on the machine, also file the identification numbers in a secure place off the machine.

Be sure to use fuel that complies with JIS K-2204, EN-590 or ASTM D-975. Also use fuel that complies with solid contamination level of class 18/16/13 of ISO4406-1999 (solid contamination includes dust). If the fuel specified above is not used, exhaust gas that exceeds the regulation values may be discharged, causing serious problem on the engine. Consult your authorized dealer.

Warranty is provided as a part of Hitachi's support program for customers who operate and maintain their equipment as described in this manual. The warranty is explained on the warranty certificate which you should have received from your dealer.

This warranty provides you the assurance that Hitachi will back its products where defects appear within the warranty period. In some circumstances, Hitachi also provides field improvements, often without charge to the customer, even if the product is out of warranty. **Should the equipment be abused, or modified to change its performance beyond the original factory specifications, the warranty will become void and field improvements may be denied.** Setting fuel delivery above specifications or otherwise overpowering machines will result in such action.

Only qualified, experienced operators officially licensed (according to local law) should be allowed to operate the machine. Moreover, only officially licensed personnel should be allowed to inspect and service the machine.

PRIOR TO OPERATING THIS MACHINE, INCLUDING COMMUNICATION SYSTEM, IN A COUNTRY OTHER THAN A COUNTRY OF ITS INTENDED USE, IT MAY BE NECESSARY TO MAKE MODIFICATIONS TO IT SO THAT IT COMPLIES WITH THE LOCAL REGULATORY STANDARDS (INCLUDING SAFETY STANDARDS) AND LEGAL REQUIREMENTS OF THAT PARTICULAR COUNTRY. PLEASE DO NOT EXPORT OR OPERATE THIS MACHINE OUTSIDE OF THE COUNTRY OF ITS INTENDED USE UNTIL SUCH COMPLIANCE HAS BEEN CONFIRMED. PLEASE CONTACT HITACHI CONSTRUCTION MACHINERY CO., LTD. OR ANY OF OUR AUTHORIZED DISTRIBUTOR OR DEALER IF YOU HAVE ANY QUESTIONS CONCERNING COMPLIANCE.

In this manual, urea water is indicated as DEF/ AdBlue®.

"DEF" stands for the Diesel Exhaust Fluid.

AdBlue® is a registered trademark of the Verband der Automobilindustrie e.V. (VDA).

Jubilee® is a registered trademark of the L Robinson & Co (Gillingham) Limited.
Hycolin® is a registered trademark of the USUI CO., LTD.

The Bluetooth® word mark and logos are registered trademarks owned by Bluetooth SIG, Inc. and any use of such marks by Hitachi Construction Machinery Co., Ltd. is under license. Other trademarks and trade names are those of their respective owners.

All information, illustrations and specifications in this manual are based on the latest product information available at the time of publication. The right is reserved to make changes at any time without notice.

©2021 Hitachi Construction Machinery Co., Ltd.
All rights reserved.

MEMO

INDEX

MACHINE NUMBERS
INTENDED USE
SAFETY
BEFORE OPERATION
OPERATOR'S STATION
BREAK-IN
OPERATING THE ENGINE
DRIVING THE MACHINE
OPERATING THE MACHINE
TRANSPORTING
MAINTENANCE
HYDRAULIC CIRCUIT
MAINTENANCE UNDER SPECIAL ENVIRONMENTAL CONDITIONS
STORAGE
TROUBLESHOOTING
SPECIFICATIONS
OPTIONAL ATTACHMENTS AND DEVICES
INDEX

MEMO

CONTENTS

MACHINE NUMBERS 1

INTENDED USE 1

Intended Use 1

SAFETY S-1

Recognize Safety Information S-1
Understand Signal Words S-1
Follow Safety Instructions S-2
Prepare for Emergencies S-3
Wear Protective Clothing S-3
Protect Against Noise S-4
Inspect Machine S-4
General Precautions for the Cab S-5
Use Handrail and Steps S-5
Adjust the Operator's Seat S-6
Ensure Safety Before Rising from or Leaving Operator's Seat S-6
Fasten Your Seat Belt S-6
Move and Operate Machine Safely S-7
Start the Engine Only from Operator's Seat S-7
Jump Starting S-8
Keep Riders off Machine S-8
Precautions for Operations S-9
Perform Job Site Risk Assessment Beforehand S-10
Install OPG Guard S-11
Restriction of Attachment Installation S-11
Provide Signals for Jobs Involving Multiple Machines S-11
Confirm Direction of Machine Travel S-12
Drive Machine Safely S-13
Avoid Injury from Rollaway Accidents S-15
Avoid Accidents from Reversing and Swing Operation S-16
Keep People Clear from Working Area S-17
Never Position the Bucket Over Anyone S-17
Avoid Undercutting S-18
Avoid Tipping S-18
Never Undercut a High Bank S-19
Dig with Caution S-19
Caution with an Overhead Obstacle S-20
Avoid Power Lines S-20
Precautions for Lightning S-21
Object Handling S-21
Protect Against Flying Debris and Falling Object S-22
Park Machine Safely S-23
Handle Fluids Safely–Avoid Fires S-24
Transport Safely S-25
Practice Maintenance Safely S-26
Warn Others of Service Work S-27
Support Machine Properly S-28
Stay Clear of Moving Parts S-28
Prevent Parts from Flying S-29
Avoid Injury from Attachment Falling Accident S-29
Prevent Burns S-30
Replace Rubber Hoses Periodically S-31
Avoid High-Pressure Fluids S-31
Prevent Fires S-32
Check for Oil Leaks: S-32
Check for Short circuits: S-32
Clean up Flammable Materials: S-33
Check Key Switch: S-33
Check Heat Shields: S-33
Evacuating in Case of Fire S-34
Beware of Exhaust Fumes S-34
Precautions for Welding and Grinding S-35
Avoid Heating Near Pressurized Fluid Lines S-35
Avoid Applying Heat to Lines Containing Flammable Fluids S-35
Precautions for Handling Accumulator and Gas Damper S-36
Remove Paint Before Welding or Heating S-36
Beware of Asbestos and Silica Dust and Other Contamination S-36
Prevent Battery Explosions S-37
Service Air Conditioning System Safely S-37
Handle Chemical Products Safely S-38
Dispose of Waste Properly S-38
Never Ride Attachment S-39
Notes on Aftertreatment Device S-39
Precautions for Communication Terminal S-39
Precautions for Communication Terminal Equipment S-40
Notes on Protection by Operator's Station when the Machine Rolls Over S-41
Visibility Map for Machine Model ZX120-7 class with Monoblock Boom Personal Hazard S-42
Conditions: Driver's visibility on 1mRB and VTC are evaluated under ISO 5006. ..... S-42
Visibility Map for Machine Model ZX120-7 class with 2-Piece Boom Personal Hazard S-44
Conditions: Driver's visibility on 1mRB and VTC are evaluated under ISO 5006. ..... S-44
Visibility Map for Machine Model ZX160-7 class with Monoblock Boom Personal Hazard S-46
Conditions: Driver's visibility on 1mRB and VTC are evaluated under ISO 5006. ..... S-46
Visibility Map for Machine Model ZX160-7 class with 2-Piece Boom Personal Hazard S-48
Conditions: Driver's visibility on 1mRB and VTC are evaluated under ISO 5006. ..... S-48
Visibility Map for Machine Model ZX180-7 class with Monoblock Boom Personal Hazard S-50
Conditions: Driver's visibility on 1mRB and VTC are evaluated under ISO 5006. ..... S-50
Visibility Map for Machine Model ZX180-7 class with 2-Piece Boom Personal Hazard S-52
Conditions: Driver's visibility on 1mRB and VTC are evaluated under ISO 5006. ..... S-52

CONTENTS

Visibility Map for Machine Model ZX210LC-7 with Monoblock Boom Personal Hazard S-54
Conditions: Driver's visibility on 1mRB and VTC are evaluated under ISO 5006. ..... S-54
Visibility Map for Machine Model ZX210LC-7 with 2-Piece Boom Personal Hazard S-56
Conditions: Driver's visibility on 1mRB and VTC are evaluated under ISO 5006. ..... S-56
Visibility Map for Machine Model ZX210LCN-7, ZX240N-7 with Monoblock Boom Personal Hazard S-58
Conditions: Driver's visibility on 1mRB and VTC are evaluated under ISO 5006. ..... S-58
Visibility Map for Machine Model ZX210LCN-7, ZX240N-7 with 2-Piece Boom Personal Hazard.. ..... S-60
Conditions: Driver's visibility on 1mRB and VTC are evaluated under ISO 5006. ..... S-60
Visibility Map for Machine Model ZX250LC-7, ZX250LCN-7 with Monoblock Boom Personal Hazard S-62
Visibility Map for Machine Model ZX250LC-7, ZX250LCN-7 with 2-Piece Boom Personal Hazard S-64
Visibility Map for Machine Model ZX300LC-7, ZX300LCN-7 with Monoblock Boom Personal Hazard S-66
Visibility Map for Machine Model ZX300LC-7, ZX300LCN-7 with 2-Piece Boom Personal Hazard S-68
Visibility Map for Machine Model ZX350LC-7, ZX350LCN-7 with Monoblock Boom Personal Hazard S-70
Visibility Map for Machine Model ZX350LC-7, ZX350LCN-7 with 2-Piece Boom Personal Hazard S-72
Aerial Angle (Surround View) Visibility Map for ZX120-7 class S-74
Area where a person is recognizably displayed on the monitor S-74
Aerial Angle (Surround View) Visibility Map for ZX160-7, 180-7 class S-76
Area where a person is recognizably displayed on the monitor S-76
Aerial Angle (Surround View) Visibility Map for ZX210LC-7 ..... S-78
Area where a person is recognizably displayed on the monitor S-78
Aerial Angle (Surround View) Visibility Map for ZX210LCN-7, ZX240N-7 ..... S-80
Area where a person is recognizably displayed on the monitor S-80
Aerial Angle (Surround View) Visibility Map for ZX240-7 class S-82
Aerial Angle (Surround View) Visibility Map for ZX300-7 class S-84
Aerial Angle (Surround View) Visibility Map for ZX330-7 class S-86
Safety Signs S-88

BEFORE OPERATION 1-1

Name of Components 1-1
Getting ON and OFF the Machine 1-2
About Aftertreatment Device 1-3

OPERATOR'S STATION 1-5

Layout of Equipment in Operator's Station (Illustration Contents) 1-5
Multi Function Monitor 1-7
Summary 1-7
Basic Operation of Multi-Function Monitor 1-9
Basic Screen (Illustration Content) 1-16
Alarm Display and Description of Alarms 1-20
Aftertreatment Device 1-28
Engine Output Restriction Suspend 1-33
Attachments 1-35
Information 1-52
Display 1-67
Settings 1-78
Auto Air Conditioner 1-92
Summary 1-92
Name of Components 1-93
Air Conditioner Display (Monitor) 1-94
Air Conditioner Operation (When Operating with Switches) 1-95
Air Conditioner Operation (When Operating with Monitor) 1-97
Tips for Optimal Air Conditioner Usage 1-105
Audio Operation 1-107
Summary 1-107
Features 1-107
Name of Components and Control Guide (Switches) 1-108
Monitor Display 1-110
Operating the Audio System from the Multi-Monitor 1-112
Switch Panel (Illustration Content) 1-130
Engine Control Dial 1-131
Auto-Idle Switch 1-131
Travel Mode Switch 1-131
Power Mode Switch 1-132
Work Light Switch 1-132
Wiper/Washer Switch 1-133
Skylight Wiper/Washer Switch (Optional) 1-135
Key Switch 1-136
Switch Panel (for Optional Equipments) 1-137
Seat Heater Switch 1-138
Rear Light Switch (Optional) 1-139
Perimeter Lights Switch (Optional) 1-139
Rotating Lamp Switch (Optional) 1-139
Overload Alarm Switch 1-140
Quick Coupler Switch 1-140

CONTENTS

Electrical Control Main Switch 1-141
Control Lever 1-142
AUX Function Lever 1 1-142
AUX Function Lever 2 (Optional) 1-143
Facilities in Operator's Station 1-146
12/24V Power Socket 1-146
Room Light Switch 1-149
Pilot Shut-off Lever 1-150
Control Lever Auto-Lock 1-151
Engine Stop Switch 1-153
Magazine Rack 1-153
Net-Use Hook 1-153
Drink Holder 1-154
Fuse Box 1-155
Installing a Fire Extinguisher (Optional) 1-161
Handling the Cab Door and Window 1-162
Adjusting Operator's Seat and Console 1-174
Adjusting the Operator's Seat (Air Suspension Type) 1-175
Seat Belt 1-179
Aerial Angle 1-180
Switching the Monitor Display 1-182
Screen Description 1-183
Installation and Adjustment of Mirrors 1-187
Mirror Installation Locations 1-188
Emergency Exit 1-189
Battery Disconnect Switch 1-190
Switch Operation 1-191

BREAK-IN 2-1

Observe Engine Operation Closely 2-1
Every 8 Hours or Daily 2-1
After the First 50 Hours 2-1
After the First 100 Hours 2-1

OPERATING THE ENGINE 3-1

Inspect Machine Daily Before Starting 3-1
Before Starting the Engine 3-3
Starting the Engine 3-4
Check Instruments After Starting 3-10
Using the Booster Battery 3-11
Stopping the Engine 3-14
Engine Auto-Stop at Extremely Low Temperatures 3-16

DRIVING THE MACHINE 4-1

Travel Levers and Pedals 4-1
Travel Mode Switch 4-3
Traveling on Soft Ground 4-4
Raising One Track Using the Boom and Arm 4-5
Retrieval 4-6
Operating in Water or Mud 4-7
Parking the Machine on Slopes 4-8
Parking 4-8
How to Park 4-8
Prohibition of Sudden Control Operations when Traveling at High Speed 4-9
Prohibition of Traveling for Long Periods 4-9

OPERATING THE MACHINE 5-1

Control Lever (ISO Pattern) 5-1
Pilot Shut-Off Lever 5-2
Warming-Up Operation 5-3
Engine Speed Control 5-5
Auto-Idle 5-6
Auto Shut-Down 5-8
Operating Condition 5-8
Aftertreatment Device Manual Regeneration 5-12
Attachments 5-15
Power Boost Switch 5-18
Power Mode 5-19
Attachment Settings 5-20
Boom Raise Speed Priority 5-20
Front Speed Adjustment for Heavy Load 5-20
Operating Backhoe 5-21
Shovel 5-22
Grading Operation 5-23
Do Not Strike the Ground with Bucket Teeth 5-23
Avoid Hammer Work 5-24
Avoid Abusive Operation 5-24
Never Move an Object Sideways with the Bucket 5-25
Retracting the Arm and Bucket 5-25
Never use Wide Track Shoes on Rough Ground 5-26
Using the Towing Hole on the Track Frame 5-26
Pilot Accumulator Functions 5-27
Guide to Releasing Pressure in the Hydraulic Circuit 5-27
How to Lower Boom in Case of Emergency and When Engine Stops (Without hose-rupture safety valve) 5-28
How to Lower Front Equipment and Attachment in Case of Emergency and When Engine Stops (With hose-rupture safety valve) 5-30
Precautions for After Operations 5-31

TRANSPORTING 6-1

Transporting by Road 6-1
Loading/Unloading on a Trailer 6-2
Loading 6-3
Fastening the Machine for Transport 6-5
Unloading 6-6
Lifting the Machine 6-7
Lifting 6-7

MAINTENANCE 7-1

Correct Maintenance and Inspection Procedures 7-1
Layout 7-3
Inspection and Maintenance Intervals 7-4
Maintenance Guide Table 7-4

CONTENTS

Preparation for Inspection and Maintenance....7-8
Hood and Access Covers....7-9
ZX120-7 class....7-9
ZX160-7, 180-7 class....7-10
Maintenance Guide....7-14
Periodic Replacement of Parts....7-24
Kind of Oils....7-25
List of Consumable Parts....7-29
ZX120-7 class....7-29
ZX160-7, 180-7 class....7-31
ZX200-7 class....7-34
A. Greasing....7-43
Front Joint Pins....7-43
Swing Bearing....7-47
Swing Gear....7-48
B. Engine....7-50
Check Engine Oil Level....7-50
Change Engine Oil....7-52
Replace Engine Oil Filter....7-52
Check and Clean around the Engine....7-57
Check the Blowby Hose....7-58
Replace Oil Separator Element....7-60
Timing Belt....7-62
Timing Belt Cover....7-62
C. Transmission....7-63
Pump Transmission....7-63
Swing Reduction Gear....7-65
Gear Oil in Travel Device....7-67
D. Hydraulic System....7-69
Check Hydraulic Oil Level....7-71
Change Hydraulic Oil....7-72
Suction Filter Cleaning....7-77
Replace Full-Flow Filter....7-78
Replace Pilot Oil Filter....7-79
Replace Air Breather Element....7-81
Check Hoses and Lines....7-82
E. Fuel System....7-87
Drain Fuel Tank Sump....7-90
Drain Fuel Pre-Filter....7-91
Replace Fuel Main Filter Element....7-96
Replace Fuel Pre-Filter Element....7-99
Check Fuel Hoses....7-102
F. Air Cleaner....7-103
Clean and Replace Air Cleaner Element (Outer)....7-103
Replace Air Cleaner Element (Inner)....7-106
G. Cooling System....7-107
Check Coolant Level....7-109
Inspect V-belt....7-111
Check and Adjust V-belt Tension....7-112
Change Coolant....7-114
Clean Radiator, Oil Cooler and Intercooler Core....7-117
Clean Oil Cooler, Radiator and Intercooler Front Screen....7-121
Clean Air Conditioner Condenser....7-122
Clean fuel oil cooler....7-122
H. Electrical System....7-123
Battery....7-124
Replace Fuses....7-131
I. Miscellaneous....7-139
Check and Replace Bucket Teeth....7-139
Change Bucket....7-145
Convert Bucket Connection Into Face Shovel....7-147
Adjust Bucket Linkage....7-149
Remove Travel Levers....7-150
Check and Replace Seat Belt....7-151
Clean Mobile Phone (Smartphone) Holder....7-152
Clean Drink Holder....7-153
Clean Storage Pocket....7-154
Wide View Wiper Maintenance....7-155
Clean Rain Visor....7-158
Grease Cab Door Hinge....7-158
Grease Console Height Adjustment Pin....7-159
Check Windshield Washer Fluid Level....7-160
Check & Adjust Track Sag....7-161
Clean and Replace Air Conditioner Filter....7-166
Check Air Conditioner....7-169
Clean Cab Floor....7-172
Retighten Engine Cylinder Head Bolt....7-173
Inspect and Adjust Valve Clearance....7-173
Measure Engine Compression Pressure....7-173
Check Starter and Alternator....7-173
Check and Clean EGR Valve....7-173
EGR Cooler Cleaning....7-173
Check Turbo Charger....7-173
Check and Clean Injector....7-174
Check ECM and Related Sensors and Actuators....7-174
Check Aftertreatment Device and Related Sensors and Actuators....7-174
Check Gas Damper....7-174
Check Reed Valve....7-174
Tightening and Retightening Torque of Nuts and Bolts....7-175
J. Aftertreatment Device....7-208
Check, Clean and/or Replace Filter of Aftertreatment Device....7-208
Check and Clean Aftertreatment Device....7-208
K. Urea SCR System (Except ZX120-7 class)....7-209
Check DEF....7-210
Replace DEF Supply Module Main Filter....7-219
Replace DEF Tank Water Supply Inlet Filter....7-221
L. Aerial Angle....7-222
Daily Check of Camera Images used to Compose the Aerial Angle....7-222
Check Camera Images Used to Compose the Aerial Angle....7-223
Reference Information....7-225

HYDRAULIC CIRCUIT.... 8-1

CONTENTS

Hydraulic Circuit 8-1

MAINTENANCE UNDER SPECIAL ENVIRONMENTAL CONDITIONS 9-1

STORAGE 10-1

Storing the Machine 10-1

TROUBLESHOOTING 11-1

SPECIFICATIONS 12-1

Specifications ZX120-7 class 12-1
Dimensions ZX120-7 class 12-2
Working Ranges ZX120-7 class 12-3
Shoe Types and Applications ZX130-7 12-4
Shoe Types and Applications ZX130LCN-7 12-5
Bucket Types and Applications ZX120-7 class 12-6
Specifications ZX160-7, 180-7 class 12-7
Dimensions ZX160-7, 180-7 class 12-8
Working Ranges ZX160-7, 180-7 class 12-9
Shoe Types and Applications ZX160LC-7 12-10
Shoe Types and Applications ZX180LC-7 12-11
Shoe Types and Applications ZX180LCN-7 12-12
Bucket Types and Applications ZX160LC-7 12-13
Bucket Types and Applications ZX180LC-7, 180LCN-7 12-14
Specifications ZX210LC-7 12-15
Specifications ZX210LCN-7, 240N-7 12-16
Dimensions ZX210LC-7 12-17
Dimensions ZX210LCN-7, 240N-7 12-18
Working Ranges ZX200-7 class 12-19
Shoe Types and Applications ZX210LC-7 12-20
Shoe Types and Applications ZX210LCN-7 12-21
Shoe Types and Applications ZX240N-7 12-22
Bucket Types and Applications ZX200-7 class 12-23
Specifications ZX250LC-7, 250LCN-7 12-25
Dimensions ZX250LC-7, 250LCN-7 12-26
Working Ranges ZX250LC-7, 250LCN-7 12-27
Shoe Types and Applications ZX250LC-7 12-28
Shoe Types and Applications ZX250LCN-7 12-29
Bucket Types and Applications ZX250LC-7, 250LCN-7 12-30
Specifications ZX300LC-7, 300LCN-7 12-32
Dimensions ZX300LC-7, 300LCN-7 12-33
Working Ranges ZX300LC-7, 300LCN-7 12-34
Shoe Types and Applications ZX300LC-7 12-35
Shoe Types and Applications ZX300LCN-7 12-36
Bucket Types and Applications ZX300LC-7, 300LCN-7 12-37
Specifications ZX350LC-7, 350LCN-7 12-39
Dimensions ZX350LC-7, 350LCN-7 12-40
Working Ranges ZX350LC-7, 350LCN-7 12-41
Shoe Types and Applications ZX350LC-7 12-42
Shoe Types and Applications ZX350LCN-7 12-43
Bucket Types and Applications ZX350LC-7, 350LCN-7 12-44
The Value of the Carbon Dioxide (CO_2) emissions 12-46

OPTIONAL ATTACHMENTS AND DEVICES 13-1

Link with Hook 13-1
--- daily inspection 13-1
Pad Crawler Shoe 13-2
Using Pad Crawler Shoe 13-2
Traveling and Other Cautions 13-2
Transporting 13-2
Long Arm 13-8
Long Arm Operation --- If Equipped 13-8
Blade 13-9
Blade Lever 13-9
Avoid Hitting Blade with Front-End Attachment 13-10
Blade Maintenance 13-11
Specifications 13-12
Working Ranges 13-14
Shoe Types and Applications 13-15
Bucket Teeth 13-16
Bucket Teeth (Transverse-Type-Pin-Used Type) (ZX200-7, 240-7, 300-7, 330-7 class only) 13-16
Replacement Procedure 13-16
2-Piece Boom 13-17
2-piece Boom Operation 13-17
Maintenance (2-Piece Boom) 13-18
Specifications ZX120-7 class 2-piece Boom 13-21
Working Ranges ZX120-7 class 2-piece Boom 13-23
Shoe Types and Applications ZX130-7 2-piece Boom 13-24
Shoe Types and Applications ZX130LCN-7 2-piece Boom 13-24
Specifications ZX160-7, 180-7 class 2-piece Boom 13-25
Working Ranges ZX160-7, 180-7 class 2-piece Boom 13-26
Shoe Types and Applications ZX160LC-7 2-piece Boom 13-27
Shoe Types and Applications ZX180LC-7 2-piece Boom 13-28
Shoe Types and Applications ZX180LCN-7 2-piece Boom 13-29
Specifications ZX200-7 class 2-piece Boom 13-30
Working Ranges ZX200-7 class 2-piece Boom 13-31
Shoe Types and Applications ZX210LC-7 2-piece Boom 13-32
Shoe Types and Applications ZX210LCN-7 2-piece Boom 13-33
Shoe Types and Applications ZX240N-7 2-piece Boom 13-33

CONTENTS

Specifications ZX250LC-7, 250LCN-7 2-piece Boom 13-34
Working Ranges ZX250LC-7, 250LCN-7 2-piece Boom 13-35
Shoe Types and Applications ZX250LC-7 2-piece Boom 13-36
Shoe Types and Applications ZX250LCN-7 2-piece Boom 13-37
Specifications ZX300LC-7, 300LCN-7 2-piece Boom 13-38
Working Ranges ZX300LC-7, 300LCN-7 2-piece Boom 13-39
Shoe Types and Applications ZX300LC-7 2-piece Boom 13-40
Shoe Types and Applications ZX300LCN-7 2-piece Boom 13-41
Specifications ZX350LC-7, 350LCN-7 2-piece Boom 13-42
Working Ranges ZX350LC-7, 350LCN-7 2-piece Boom 13-43
Shoe Types and Applications ZX350LC-7 2-piece Boom 13-44
Shoe Types and Applications ZX350LCN-7 2-piece Boom 13-45
Attachment Pedal 13-46
Attachment Pedal (Hydraulic Breaker) (Optional) 13-46
Attachment Pedal (Hydraulic Crusher) (Optional) 13-47
Hydraulic Breaker, Crusher, Quick Coupler 13-48
Selection of Hydraulic Breaker, Crusher, Quick Coupler 13-48
Warnings about Use 13-48
Precautions for Hydraulic Breaker, Crusher, Quick Coupler Lines 13-48
Piping for Breaker and Crusher 13-49
Breaker Valve Relief Pressure Adjustment 13-50
How to Use Quick Couplers 13-51
....13-54
Precautions for Breaker Operation 13-55
Change Hydraulic Oil and Replace Full-Flow Filter Element 13-59
Precautions for Crusher Operation 13-60
Never Use a Hydraulic-Driven Attachment (Breaker, Crusher, etc.) for Slinging Work 13-61
Attachment 13-62
Attachment Connections 13-63
Precautions when Retracting the Arm and Bucket 13-65
Automatic Refueling Device 13-66
Operating the Automatic Refueling Device 13-66
Inspection and Maintenance of the Automatic Refueling Device 13-69

INDEX 16-1

MACHINE NUMBERS

The product identification number discussed in this chapter is a number unique to each machine. It is necessary to have it when making inquiries about the machine. Please enter the ID number of your machine in the blank in this chapter.

Machine

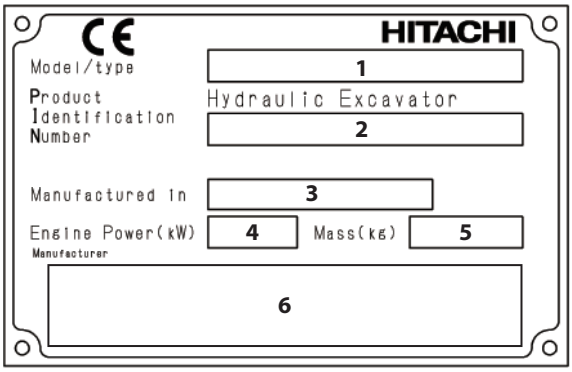

MADR-00-002-1 ja

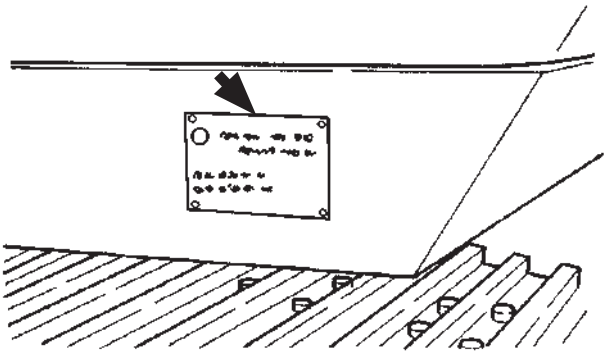

M157-00-001-1 ja

1. MODEL/TYPE
2. Product Identification Number
3. Manufactured in
4. Engine power in kW according to ISO14396 ; 2002
5. Operating mass (standard version)
6. Manufacturer (Authorized Representative, if applicable)

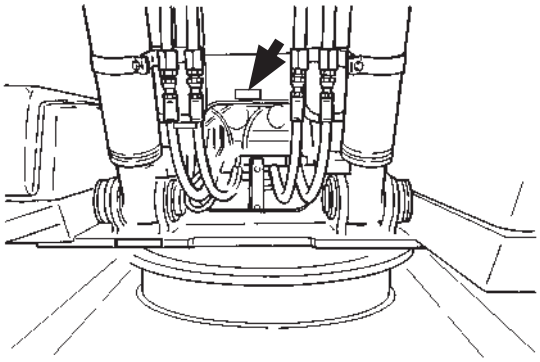

M157-12-008-1 ja

Product Identification Number

NOTE

HCM++++++++++

Marks to indicate the start and end of the PIN

PRODUCT IDENTIFICATION NUMBER (PIN)

Engine

TYPE :

MFG. NO. :

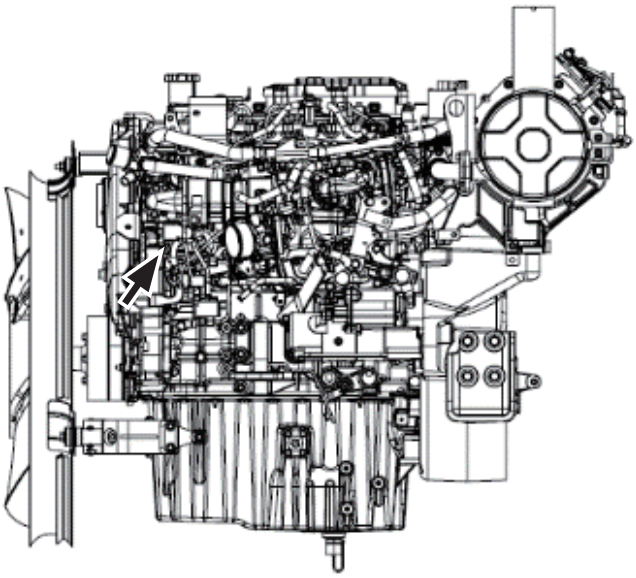

ZX120-7 class

MDFY-00-067-1 ja

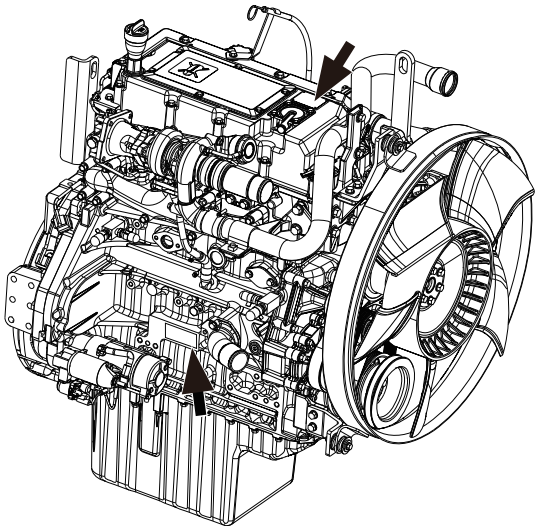

ZX160-7, 180-7 class

MDFY-01-173-1 ja

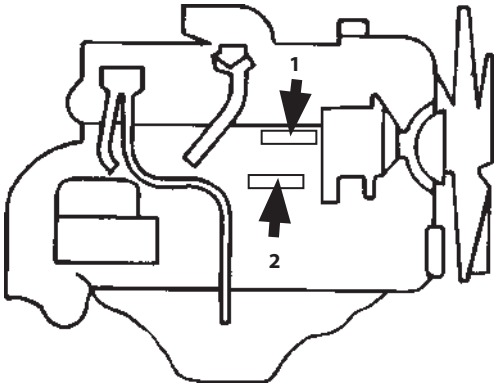

HCME-MDAA-00-001-2 ja

1 ZX300-7, 330-7 class 2 ZX200-7, 240-7 class

SCR (Selective Catalytic Reduction) Catalyst

TYPE :

MFG. NO. :

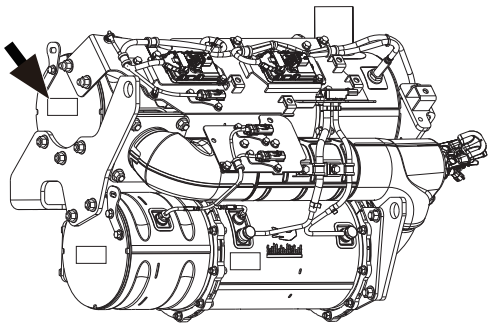

ZX160-7, 180-7 class

MDFY-01-174-1 ja

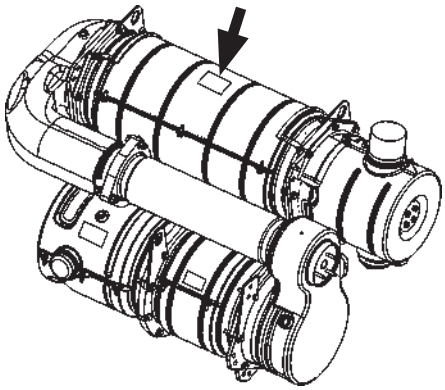

ZX200-7, 240-7 class

MDC1-00-001-1 ja

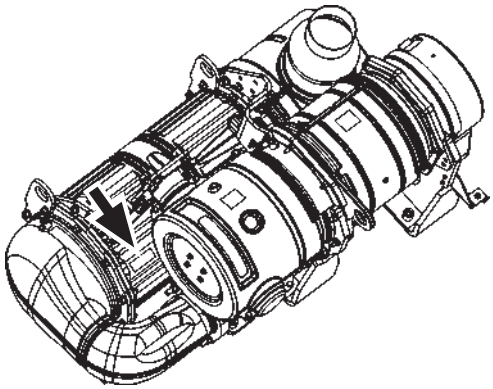

ZX300-7, 330-7 class

MDC1-01-510-1 ja

DOC (Diesel Oxidation Catalyst)

TYPE :

MFG. NO. :

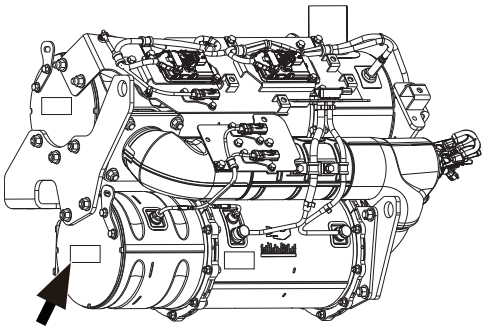

ZX160-7, 180-7 class

MDFY-01-174-2 ja

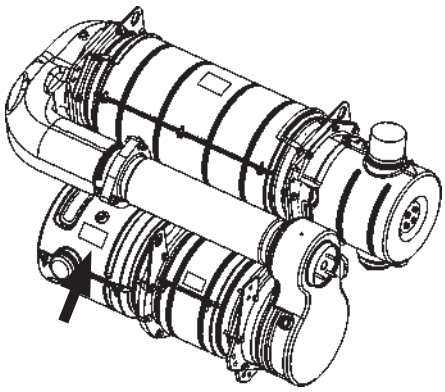

ZX200-7, 240-7 class

MDC1-00-001-3 ja

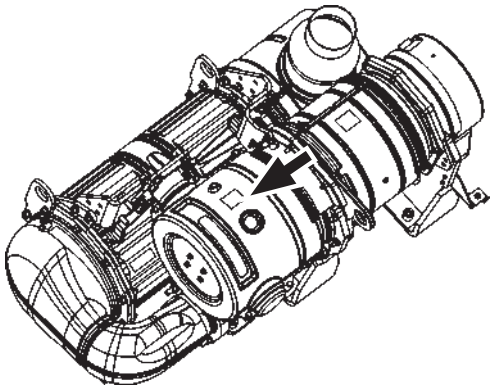

ZX300-7, 330-7 class

MDC1-01-510-3 ja

CSF (Catalysed Soot Filter)

TYPE :

MFG. NO. :

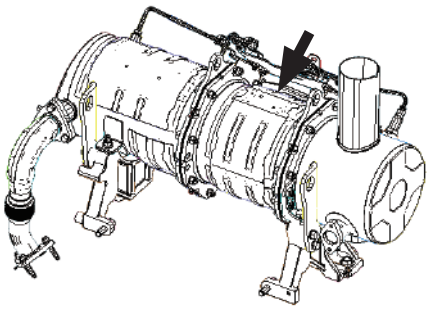

ZX120-7 class

MDFY-01-176-2 ja

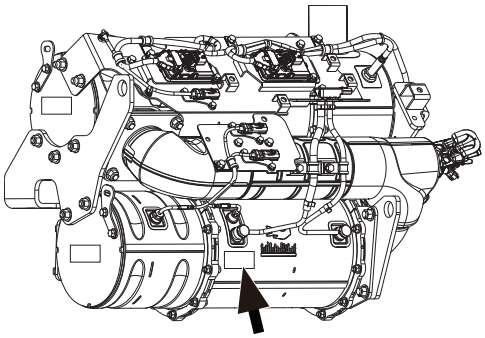

ZX160-7, 180-7 class

MDFY-01-174-3 ja

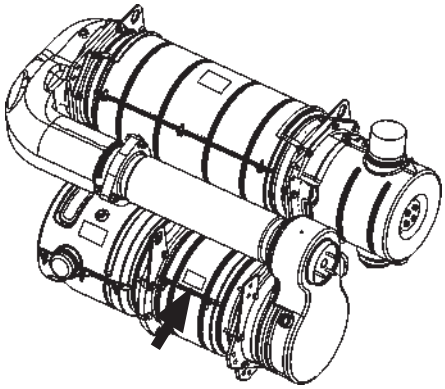

ZX200-7, 240-7 class

MDC1-00-001-4 ja

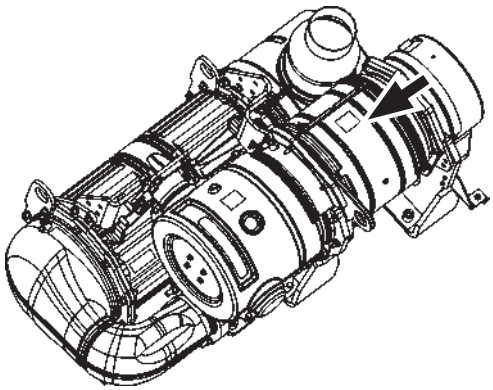

ZX300-7, 330-7 class

MDC1-01-510-4 ja

Travel Motor

Right side
TYPE :
MFG. NO. :

Left side
TYPE :
MFG. NO. :

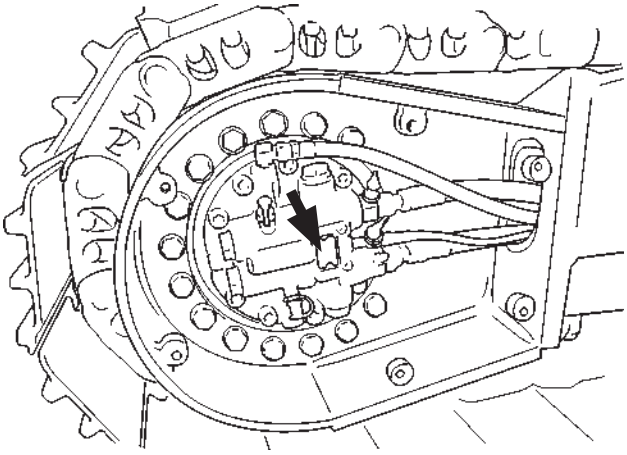

M178-07-047-2 ja

Swing Motor

TYPE :
MFG. NO. :

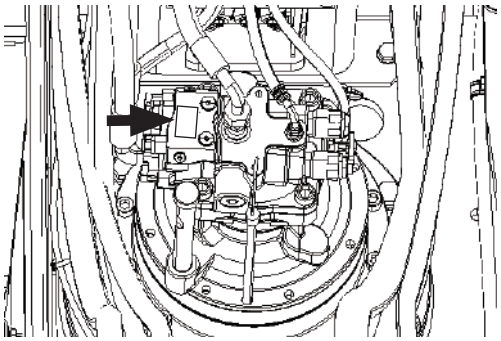

MDFY-00-030-1 ja

Hydraulic Pump

TYPE :

MFG. NO. :

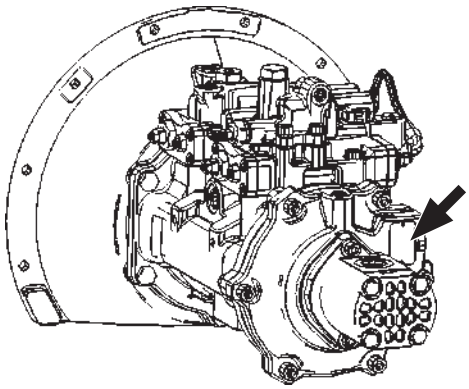

ZX120-7 class

MDAA-07-072-1 ja

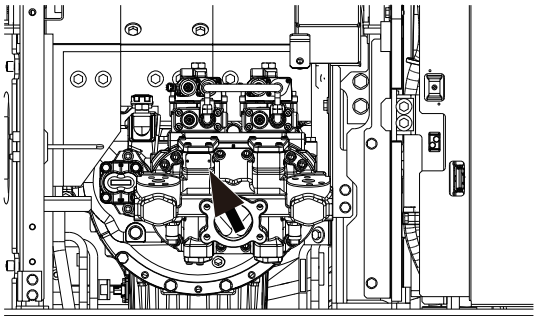

ZX160-7, 180-7 class

MDFY-01-175-1 ja

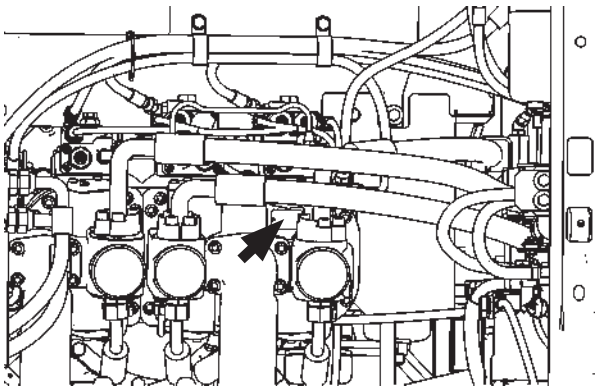

ZX200-7, 240-7, 300-7, 330-7 class

MDAA-00-003-1 ja

Cab

MFG. NO. :

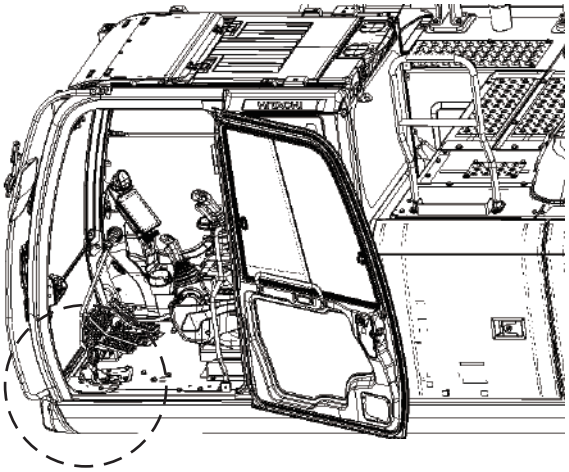

MDFY-07-043-2 ja

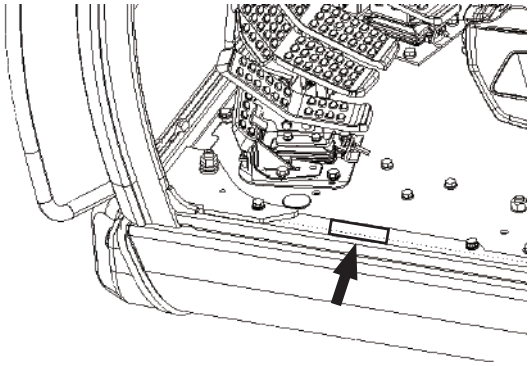

MDFY-00-066-1 ja

Intended Use

This machine is designed and intended to be used for excavating with a bucket or working with tools/attachments described in this manual or approved in writing by the manufacturer.
Risk assessment related to the specific application and working conditions of the machine may require additional safety measures such as protective guards, safety glazing, filtration of cabin air, etc. to be installed, enabling the machine to be operated safely under the specific conditions. Consult your authorized dealer for further information on possibilities to adapt the machine accordingly.
This machine can be used for lifting applications that are within the lifting capacity of the machine. Use approved lifting points and lifting devices and follow the instructions provided in this manual.
Local regulations and instructions must be respected when using the machine. Using this machine and its equipment for operations other than those intended or approved by the manufacturer, are prohibited.

Modifications

No modification affecting the intended use or structural integrity and therefore safety of the machine should be made without written approval of the manufacturer. Modifications which are not approved include the use of unauthorized accessories, assemblies, parts or attachments, including but not limiting to those connected with a coupling device.
Any legal or natural person performing unapproved modifications to the machine assumes all liability directly or indirectly related to the modification.
The manufacturer reserves the right to reject any warranty claim arising from or related to unapproved modifications.

MEMO

Recognize Safety Information

- These are the **SAFETY ALERT SYMBOLS**.
  - When you see these symbols on your machine or in this manual, be alert to the potential for injury to persons.
  - Follow recommended precautions and safe operating practices.

SA-2644 ja

Understand Signal Words

- On machine safety signs, signal words designating the degree or level of hazard - DANGER, WARNING, or CAUTION are used with the safety alert symbol.
  - **DANGER** indicates an imminently hazardous situation which, if not avoided, will result in death or serious injury.
  - **WARNING** indicates a potentially hazardous situation which, if not avoided, could result in death or serious injury.
  - **CAUTION** indicates a potentially hazardous situation which, if not avoided, may result in minor or moderate injury.
  - **DANGER or WARNING safety signs** are located near specific hazards. General precautions are listed on **CAUTION safety signs**.
  - Some safety signs are occasionally used on this machine that do not use any of the designated signal words mentioned above after the safety alert symbol.
- To avoid confusing machine protection with personal safety messages, a signal word IMPORTANT indicates a situation which, if not avoided, could result in damage to the machine.

SA-632 en_GB

- NOTE: Indicates an additional explanation for a piece of information.

Follow Safety Instructions

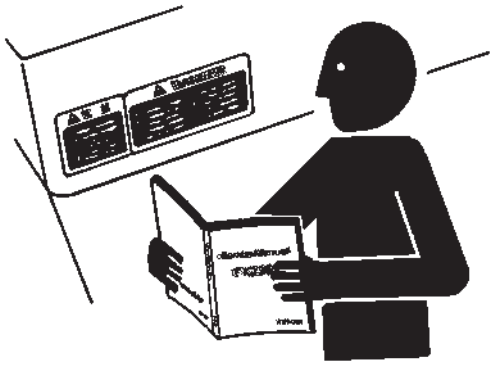

SA-003 ja

- Carefully read and follow all safety instructions on the machine and in this manual.
- Safety signs should be readable and replaced when necessary.
  - If a safety sign or this manual is damaged or missing, order a replacement from your authorized dealer in the same way you order other replacement parts (be sure to state machine model and serial number when ordering).
- Learn how to operate the machine and its controls correctly and safely.
- Only trained, qualified and authorized personnel should operate the machine.
- Keep your machine in proper working condition.
  - Unauthorized modifications of the machine may impair its function and/or safety and affect machine life.
  - Do not modify any machine parts without authorization. Failure to do so may deteriorate the safety, function, and/or service life of the machine and will void Hitachi Warranty.
  - Never attempt to modify or disassemble the inlet/exhaust parts of the engine and the aftertreatment device. Avoid shocks to the aftertreatment device, such as striking or dropping objects onto the device. Failure to do so may affect the exhaust gas purifying function, possibly damaging it or lowering its performance.
- Attachments and/or optional parts or equipment not matching machine characteristics and -capacities may cause injuries to persons, machine trouble and/or damage to material. If you are not sure of the suitability of attachments, optional parts, and/or equipment, contact your authorized Hitachi dealer. The safety messages in this SAFETY chapter are intended to illustrate basic safety procedures when working with machines. However, it is impossible to cover every hazardous situation you may encounter in these safety messages. Adequate measures resulting from job site risk assessment allow safe operation of machines. If you have any questions, you should first consult your supervisor and/or your authorized dealer before operating or performing maintenance work on the machine.

Prepare for Emergencies

- Be prepared for a fire or an accident.
  - Keep a first aid kit and fire extinguisher on hand.
  - Thoroughly read and understand the label attached on the fire extinguisher to use it properly.
  - To ensure that a fire extinguisher can be always used when necessary, check and service the fire extinguisher at the recommended intervals as specified in the fire extinguisher manual.
  - Establish emergency procedure guidelines to cope with fires and accidents.
  - Keep emergency numbers for doctors, ambulance service, hospital, and fire department posted near your telephone.

SA-437 ja

Wear Protective Clothing

- Wear close fitting clothing and safety equipment appropriate to the job.

  You may need:
  - A hard hat
  - Safety shoes
  - Safety glasses, goggles, or face shield
  - Heavy gloves
  - Hearing protection
  - Reflective clothing
  - Wet weather gear
  - Respirator or filter mask

  Be sure to wear the correct equipment and clothing for the job.
  - Avoid wearing loose clothing, jewelry, or other items that can catch on control levers or other parts of the machine.
- Operating equipment safely requires the full attention of the operator. Do not wear radio or music headphones while operating the machine.

SA-438 ja

Protect Against Noise

- Prolonged exposure to loud noise can cause, stress, fatigue and impairment or loss of hearing.
  - Wear a suitable hearing protective device such as earmuffs or earplugs to protect against noise.

SA-434 ja

Inspect Machine

- Inspect your machine carefully each day or shift before you start operating it to ensure the machine is in full working order.
  - During the inspection be sure to cover all points described in the "Inspect Machine Daily Before Starting" section in the operator's manual.

SA-435 ja

General Precautions for the Cab

- Before entering the cab, thoroughly remove all dirt and/or oil such as mud, grease, soil or stones from the soles of your work boots. If a control such as a pedal is operated with dirt and/or oil on the soles of the operator's work boots, the operator's foot may slip off the pedal, potentially resulting in a personal accident.
- Keep your cabin clean. Parts, tools, soil, stones, cans or lunch box or other obstacles may fold up or turn over, potentially blocking control levers or pedals which may result in unintended movement of the machine with the risk of accidents. serious injury or death.
- Avoid storing transparent bottles in the cab. Do not attach any transparent type window decorations on the windowpanes as they may focus sunlight, possibly starting a fire.
- Refrain from listening to the radio or using music headphones or mobile telephones in the cab while operating the machine.
- Keep all flammable materials and/or explosives away from the machine.
- After using the ashtray, always cover it to extinguish the match and/or tobacco.
- Do not leave cigarette lighters in the cab. When the temperature in the cab increases, the lighter may explode.
- If a floor mat is used, use an original Hitachi floor mat specific to the machine model. If a floor mat other than original Hitachi mat is used, it may be displaced and interfere with pedal movement during operation, potentially resulting in serious injury or death.

Use Handrail and Steps

- Falling is one of the major causes of injury.
  - When you get on and off the machine, always face the machine and maintain a three-point contact with the steps and handrails.
  - Do not use any controls as hand-holds.
  - Never jump on or off the machine. Never mount or dismount a moving machine.
  - Before getting on or off the machine, check the condition of the steps and handrails for sticking of slippery material like grease or mud. Thoroughly remove such material if stuck.
  - Repair any damage to the steps and/or handrails before using the machine. Retighten loose bolts.
  - Never get on and off the machine with tools or other items in your hands.

SA-439 ja

Adjust the Operator's Seat

- A seat which is poorly adjusted for the individual operator, or the work to be undertaken, may quickly fatigue the operator leading to loss of focus and maloperation.
  - The seat should be adjusted whenever the operator of the machine changes.
  - The operator should be able to fully depress the pedals in any direction and to operate the control levers in any direction while his back remains against the seat back.
  - If not, adjust the seat and check again.
  - Depending on the work, the seat may need to be moved forward or backward to improve visibility into the working area. Do not stand up from your seat while operating the machine.
  - Adjust the mirrors to maximize visibility into areas without direct visibility, in particular areas close to the machine. For mirror adjustment, refer to the mirror adjustment section of this manual.

SA-378 ja

Ensure Safety Before Rising from or Leaving Operator's Seat

- Before rising from the operator's seat to e. g. open or close a window or to adjust the seat position, be sure to first lower the front attachment to the ground and move the pilot shut-off lever to the LOCK position. Failure to do so may allow the machine to unexpectedly move when a body part unintentionally comes in contact with a control lever and/or pedal, potentially resulting in serious injury or death.
- Before leaving the machine, be sure to first lower the front attachment to the ground and move the pilot shut-off lever to the LOCK position. Turn the key switch OFF to stop the engine.
- Before leaving the machine, close all windows, doors, and access covers and lock them.

Fasten Your Seat Belt

- Be sure to remain seated with the seat belt securely fastened at all times when the machine is in operation to minimize the chance of injury from an accident.
  - If the machine should overturn, the seat belt keeps the operator within the safe zone provided by the cabin- or canopy structure. Failure to use the seat belt may result in the operator being injured, thrown from the cab and subsequently crushed by the overturning machine, potentially resulting in serious injury or death.
  - Prior to operating the machine, thoroughly examine webbing, buckle and attaching hardware. If any item is damaged or worn, replace the seat belt or component before operating the machine.
  - We recommend that the seat belt is replaced every three years regardless of its apparent condition.

SA-237 ja

Move and Operate Machine Safely

- Be aware of bystanders.
  - Take extra care not to run over bystanders. Confirm the location of bystanders before moving, swinging, or operating the machine.
  - Always keep the travel alarm and horn in working condition (if equipped). It allows you to warn people when you plan to start moving the machine.
  - Use a signal person when moving, swinging, or operating the machine in confined areas. Coordinate hand signals before starting the machine.
  - Use appropriate illumination. Check that all lights are functioning correctly before operating the machine. If any faulty illumination is present, immediately repair it.

SA-426 ja

  - Ensure the cab door, windows, doors and covers are closed and securely locked.
  - Check the mirrors and the monitor in the cab for visibility.
    Keep mirrors, camera lenses and the monitor display clean. Repair or replace any defective part(s).
    Refer to Rear View Monitor section for information on cleaning the camera lenses and the monitor display.

Start the Engine Only from Operator's Seat

- Inappropriate engine starting procedures may cause the machine to run away, possibly resulting in serious injury or death.
  - Start the engine only while seated in the operator's seat.
  - Never start the engine while standing on the track or ground.
  - Do not start engine by shorting across starter terminals.
  - Before starting the engine, confirm that all control levers are in neutral position and the pilot shut-off lever in the LOCK position.
  - Before starting the engine, confirm the safety around the machine and sound the horn to alert bystanders.

SA-444 ja

Jump Starting

- Battery gas can explode, resulting in serious injury.
  - If the engine must be jump started, be sure to follow the instructions shown in the "OPERATING THE ENGINE" chapter in the operator's manual.
  - The operator must be in the operator's seat so that the machine will be under control when the engine starts. Jump starting is a two-person operation.
  - If battery is frozen, warm and defrost before use.
  - Failure to follow correct jump starting procedures could result in a battery explosion or a runaway machine.

SA-032 ja

Keep Riders off Machine

- Riders on machine are subject to injury such as being struck by foreign objects or being thrown off the machine.
  - Only the operator should be on the machine. Keep riders off.
  - Riders also distract the operator and obstruct the operator's view, resulting in the machine being operated in an unsafe manner.

SA-379 ja

Precautions for Operations

- Perform job site risk assessment before starting operations.
  - Be sure to wear close fitting clothing and safety equipment appropriate for the job, when operating the machine.
  - Keep bystanders and obstacles clear of the area of machine operation.
    Keep bystanders away from areas where there is danger, such as from flying objects.
    Always be aware of the surroundings while operating.
    When working in a confined area surrounded by obstacles, take care not to hit the upperstructure against obstacles.
  - When loading onto trucks, bring the bucket over the truck beds from the rear side. Take care not to swing the bucket over the cab or over any person.

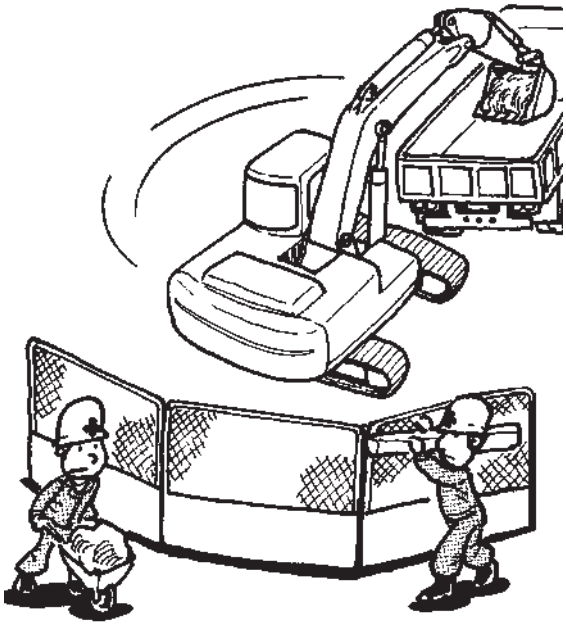

M178-05-007 ja

Perform Job Site Risk Assessment Beforehand

SA-380 ja

- Make a work plan. Use machines appropriate to the work and job site.
- Investigate the configuration and ground conditions of the job site beforehand to prevent the machine from falling and to prevent the ground, stockpiles or banks from collapsing.
- When working at the edge of an excavation or on a road shoulder, the machine could fall, possibly resulting in serious injury or death.
  - Reinforce ground, edges and road shoulders as necessary. Keep the machine well back from the edges of excavations and road shoulders.
- When working on an incline or on a road shoulder, employ a signal person as required.
- Confirm that your machine is equipped with a FOPS cab before working in areas where the possibility of falling stones or debris exist.
- When the ground footing is weak, reinforce the ground before starting work.
  - When working on frozen ground, be extremely alert. As ambient temperatures rise, footing becomes loose and slippery.
- Beware the possibility of fire when operating the machine near flammable materials such as dry grass.
- When working close to an excavation or at road shoulders, operate the machine with the tracks positioned perpendicular to the cliff face with travel motors at the rear, so that the machine can more easily evacuate if the cliff face collapses.
  - If working on the bottom of a cliff or a high bank is required, be sure to investigate the area first and confirm that no danger of the cliff or bank collapsing. In case of a risk of cliff or bank collapsing, do not work In the area.
  - Soft ground may collapse when the machine is operated on it, possibly causing the machine to fall. When working on soft ground is required, be sure to reinforce the ground first using steel plates strong and firm enough to easily support the machine.
  - Note that there is always a possibility of machine tipping over when working on rough terrain or on slopes. To reduce the risk of tipping over:
    - Reduce the engine speed.
    - Select slow travel speed mode.
    - Operate the machine slowly and be cautious with machine movements.

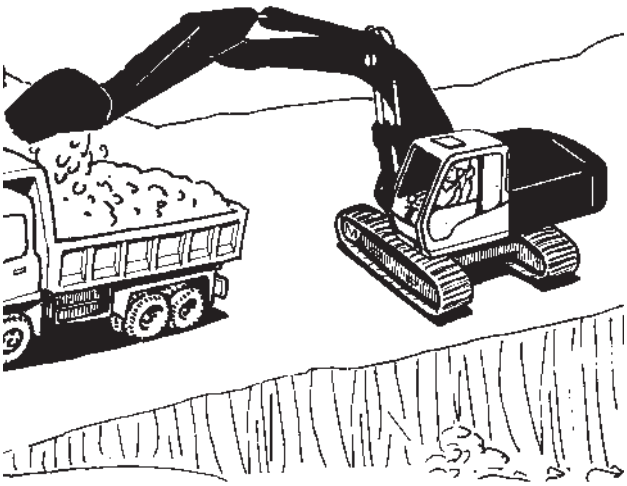

M104-05-016 ja

Install OPG Guard

In case the machine is operated in areas where the possibility of falling stones or debris exist, equip the cabin with Hitachi OPG guards.

Consult your authorized dealer for installing the OPG guards.

In order not to impair operator protection:

Replace damaged OPG guards. Never attempt to repair or modify a guard.

OPG : Operator Protective Guard

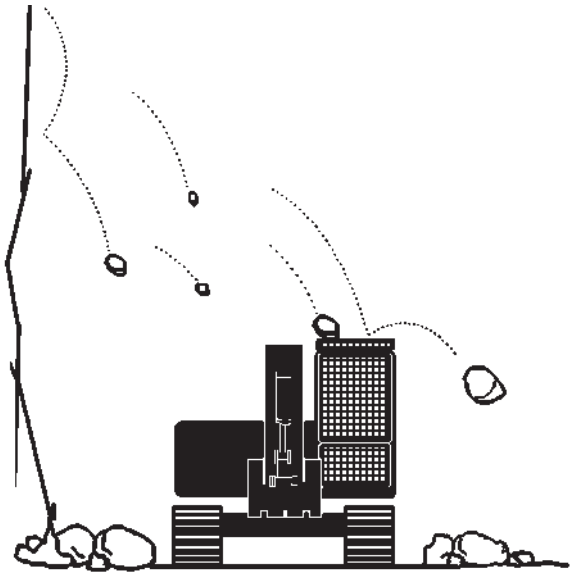

SA-490 ja

Restriction of Attachment Installation

Do not install an attachment which exceeds the permissible weight for the concerning machine configuration. Take into account the additional weight of any payload.

Provide Signals for Jobs Involving Multiple Machines

- For jobs involving multiple machines, provide signals known and understood by all personnel involved. Also, appoint a signal person to coordinate the work. Make sure that all personnel obey the signal person's directions.

SA-481 ja

Confirm Direction of Machine Travel

- Incorrect travel pedal/lever operation may result in serious injury or death.
  - Before travelling with the machine, confirm the position of the undercarriage in relation to the operator's station. Arrows on the inner side of the trackframe indicated the forward position of the undercarriage. If the travel motors are visible in front of the cab, the machine will move in opposite direction compared to lever/pedal movement.

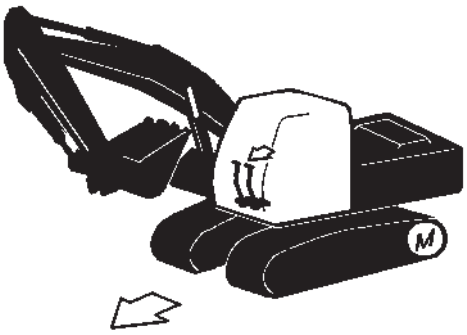

SA-491 ja

Drive Machine Safely

- Before driving the machine, always confirm that the travel levers/pedals direction corresponds to the direction you wish to drive.
  - Avoid traveling over obstructions. Soil, fragments of rocks, and/or metal pieces may scatter around the machine. Do not allow bystanders near the machine while traveling.
- Travelling on a slope may cause the machine to slip or overturn, possibly resulting in serious injury or death.
  - Never attempt to ascend or descend slopes steeper than 35 degrees.
  - Always fasten the seat belt.
  - When driving up or down a slope, keep the bucket facing the direction of travel, approximately 0.2 to 0.3 m (see A on the right) above the ground.
  - If the machine starts to skid or becomes unstable, immediately lower the bucket to the ground and stop.
  - Driving across the face of a slope or steering on a slope may cause the machine to skid or turnover. If the direction must be changed, move the machine to level ground, then, change the direction to ensure safe operation.

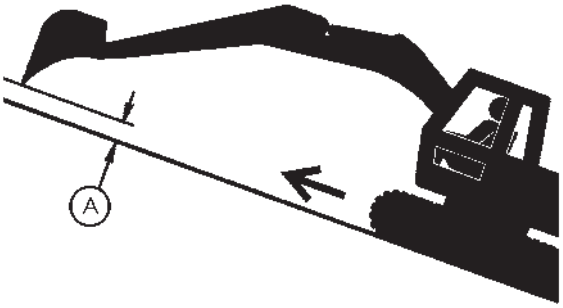

SA-387 ja

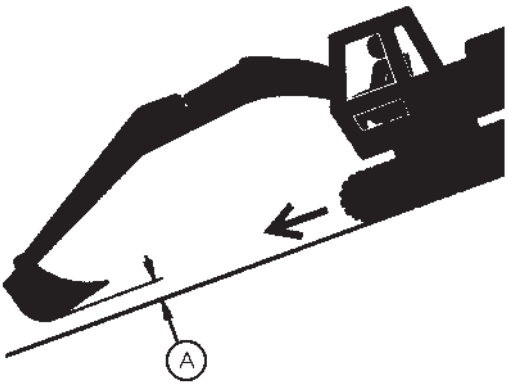

SA-388 ja

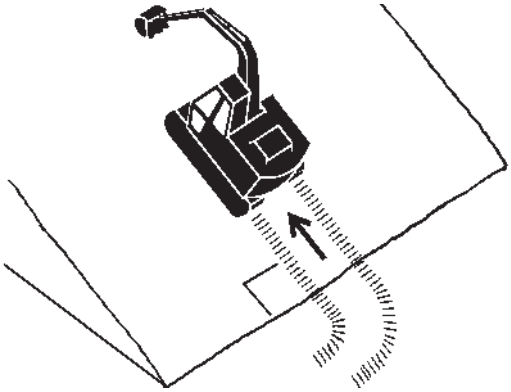

SA-441 ja

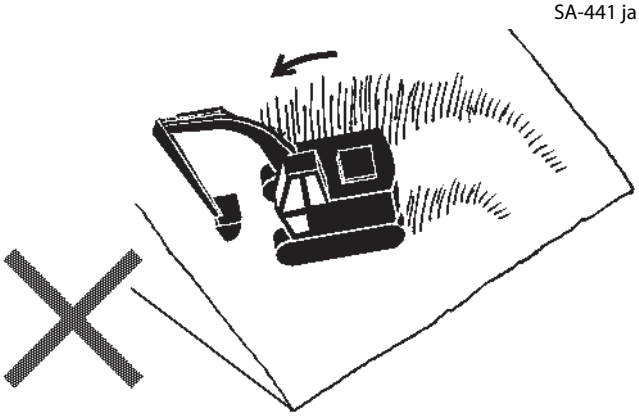

SA-442 ja

- Avoid swinging the upperstructure on slopes. The machine may tip over. Before swinging, preferably travel to level ground before swinging the upperstructure. If swinging is unavoidable, carefully operate the upperstructure and boom at slow speed.
- If the engine stalls on a slope, immediately lower the bucket to the ground. Return the control levers to neutral. Then, restart the engine.
- Warm up the machine, including the hydraulic oil, before ascending steep slopes. If hydraulic oil has not warmed up sufficiently, necessary performance may not be available.
- Use a signal person when moving, swinging or operating the machine in confined spaces. Ensure mutual understanding of hand signals before starting the machine.
- Before moving machine, determine which way to move travel pedals/levers for the direction you want to go. When the travel motors (M) are in the rear, pushing down on the front of the travel pedals or pushing the levers forward moves the machine forward. An arrow-mark (1) is affixed on the inside surface of the side frame to indicate the machine forward direction.
- Select a travel route that is as flat as possible. Steer the machine as straight as possible, making small gradual changes in direction.
- Before traveling on them, confirm the strength of bridges and road shoulders, and reinforce if necessary.
- Use wood plates in order not to damage the road surface. Be careful of steering when operating on asphalt roads in summer.
- When crossing rail road tracks, use wood plates in order not to damage them.
- When crossing a river, measure the depth of the river using the bucket, and cross slowly. Do not cross the river when the depth of the river is deeper than the upper edge of the upper roller.
- When traveling on rough terrain, reduce engine speed. Select slow travel speed. Slower speed will reduce the possiblility of damage to the machine.

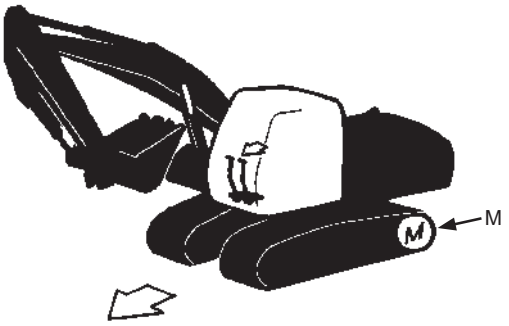

M104-05-008-2 ja

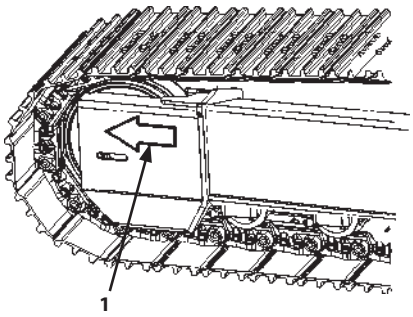

M178-03-001-2 ja

- Avoid operations that may damage the track and undercarriage components.
- In winter time, always clean snow and ice from track shoes before loading and unloading the machine, to prevent the machine from slipping.

Avoid Injury from Rollaway Accidents

- Do not try to enter a moving machine. Serious injury or death may result if you attempt to mount or stop a moving machine.
- To avoid rollaways:
  - Park the machine on a level ground.
  - Position the machine to prevent rolling.
  - Park at a reasonable distance from other machines.
  - Lower the bucket or work tool to the ground. Thrust the bucket teeth into the ground if you must park on a slope.
  - Set the pilot shut-off lever to LOCK position.
  - Block both tracks.

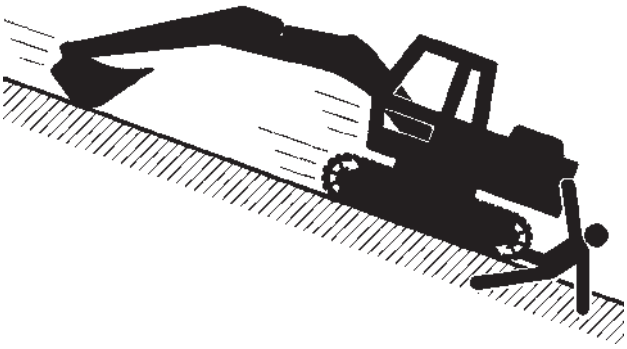

SA-391 ja

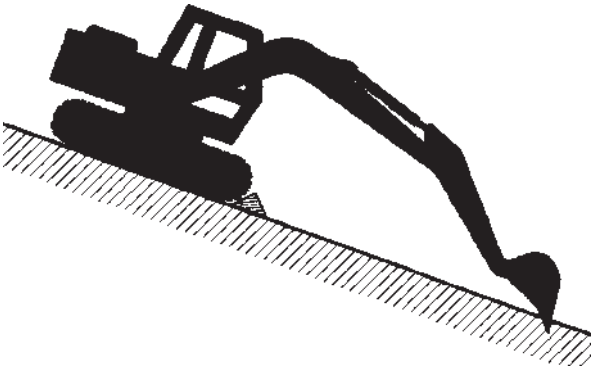

SA-2273 ja

Avoid Accidents from Reversing and Swing Operation

- If any person is present near the machine when reversing the machine or swinging the upperstructure, the machine may hit or run over that person, resulting in serious injury or death.
  To avoid accidents:
  - Before you reverse or swing the machine, be sure that no bystanders are IN THE WORK AREA. Always be alert for bystanders moving into the work area. Use the horn to warn bystanders before moving machine.
  - Use a signal person during reversing if your view is obstructed. Always keep the signal person in view.
  - Keep windows, mirrors, and lights clean and functional.
  - Dust, heavy rain, fog, etc., can reduce visibility. As visibility decreases, adapt machine movements accordingly to maintain safe operation and use proper lighting.

SA-383 ja

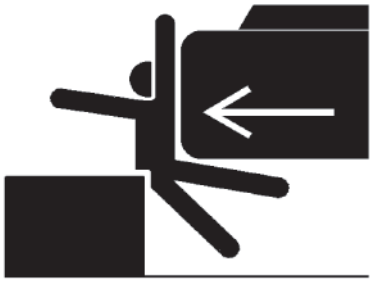

SA-384 ja

Keep People Clear from Working Area

- Bystanders in the vicinity of an operating machine may be hit severely by the swinging front attachment or counterweight, be caught by other objects, and/or be struck by flying objects, resulting in serious injury or death.
  - Set up barriers to keep bystanders away from areas where risk exist. Use appropriate measures to prevent anyone from entering the machine's work area, e.g. setting up barriers.
  - Follow instructions and respect local regulations concerning segregation of persons and machines.

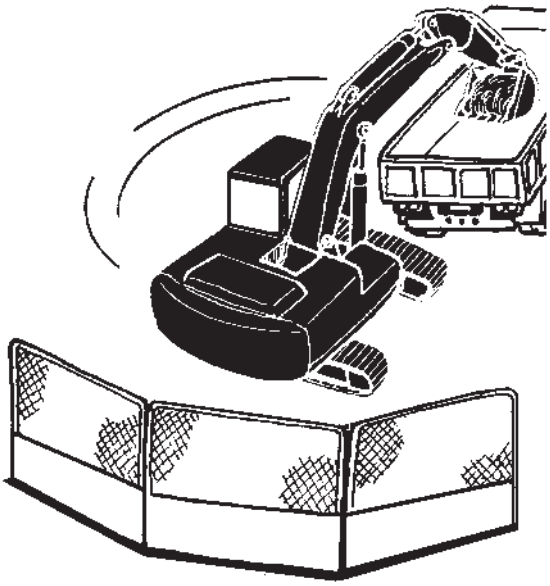

SA-386 ja

Never Position the Bucket Over Anyone

- Never lift, move, or swing the bucket above anyone or above the truck cab.
  Serious injury or machine damage may result due to bucket load spill or due to collision with the bucket.

SA-487 ja

Avoid Undercutting

- Ensure stability of the ground before starting work. Keep sufficient clearance from the excavation to avoid change in stability of the ground, potentially causing it to slide away.
  - In order to be able to move the machine away from the edge of an excavation if the ground should collapse despite the precautions taken, always position the undercarriage perpendicular to the edge of the excavation with the travel motors at the rear.
  - If the ground starts to collapse and moving the machine away from the edge is not possible, lower the front attachment in such cases to minimize the risk of tip-over.

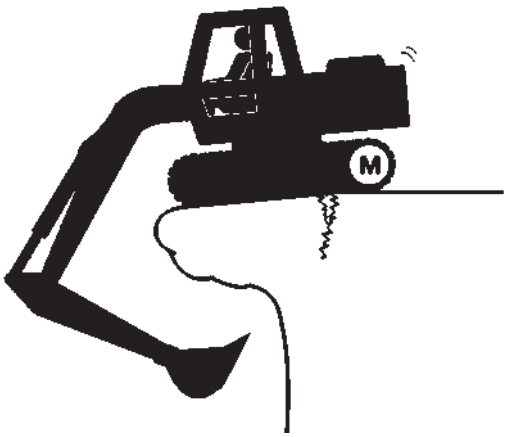

SA-488 ja

Avoid Tipping

Fasten your seat belt
Do not attempt to jump clear of a machine tipping over.
Machine will tip over faster than you can jump free
--- Serious or fatal crushing injuries will result

- The danger of tipping is always present when operating on a slope, possibly resulting in serious injury or death. To avoid tipping:
  - Be extra careful before operating on a slope.
  - Prepare the operating area, allowing the machine to work on flat, level ground.
  - Keep the bucket low to the ground and close to the machine.
  - Reduce operating speeds and movements.
  - Avoid changing direction when traveling on slopes.
  - NEVER attempt to travel across a slope steeper than 15 degrees if crossing the slope is unavoidable.
- Be careful when working on frozen ground.
  - Temperature increases will cause the ground to become soft and make ground travel unstable.

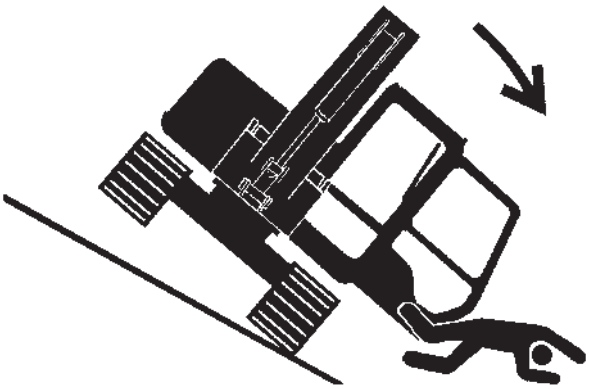

SA-012 ja

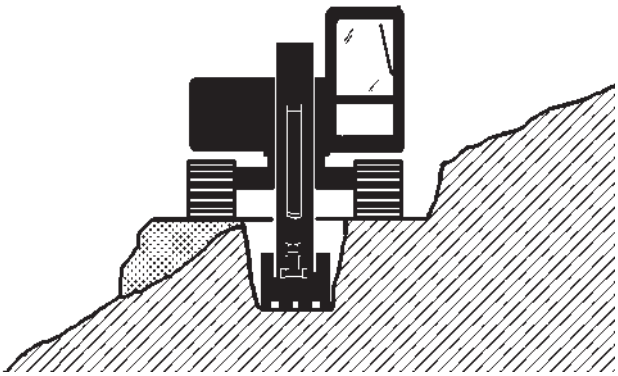

SA-440 ja

Never Undercut a High Bank

- The edges could collapse or a land slide could occur causing serious injury or death.

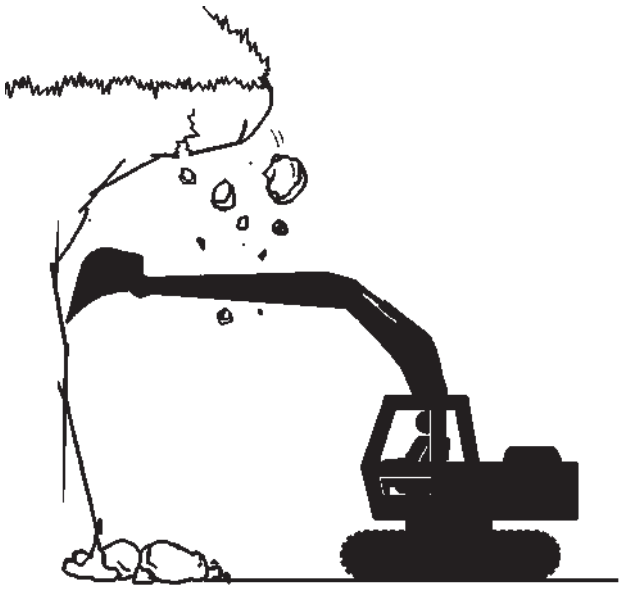

SA-489 ja

Dig with Caution

- Accidental damaging of underground cables or gas lines may cause an electric shock, explosion and/or fire, possibly resulting in serious injury or death.
  - Before digging confirm the location of cables, gas lines, and water lines.
  - Respect the minimum distance required from cables, gas lines, and water lines.
  - If a fiber optic cable should be accidentally damaged, do not look into the end. Doing so may result in serious eye injury.

SA-382 ja

Caution with an Overhead Obstacle

- If the front attachment or any other part of the machine hits an overhead obstacle, such as a bridge both the machine and the overhead obstacle may be damaged, and injury may result as well.
  - Take care to avoid hitting overhead obstacles with the attachment, boom, arm or cabin.

SA-389 ja

Avoid Power Lines

- Serious injury or death can result if the machine or front attachments are not kept at a safe distance from electric overhead lines.
  - When operating near an electric overhead line, never move any part of the machine or load to within 3 m plus twice the line insulator length of overhead wires.
  - Check and comply with any local regulations that may apply.
  - Wet ground will expand the area that could cause any person on it to be affected by electric shock. Keep all bystanders or co-workers away from the site.

SA-381 ja

Precautions for Lightning

- Lightning may strike the machine.
  If lightning comes close, immediately stop the operation, and take the following action:
  - When you are around the machine or operating cabless machine, evacuate to a safe place far away from the machine.
  - When you are in the cab, stay in the cab until lightning has passed and safety is assured. Close the cab doors and windows. Lower the bucket to the ground and stop the engine. Put your hands on your lap to avoid contact with any metal surfaces. Never go out of the cab.

If lightning strikes the machine or near the machine, check all of the machine safety devices for any failure after lightning has passed and safety is assured. If any trouble is found, operate the machine only after repairing it.

SA-2715 ja

Object Handling

- If a lifted load should fall, any person nearby may be struck by the falling load or may be crushed underneath it, resulting in serious injury or death.
  - When using the machine for lifting operations, be sure to comply with all local regulations.
  - Do not use damaged chains or frayed cables, slings, or ropes.
  - Before lifting, position the upperstructure with the travel motors at the rear.
  - Move the load slowly and carefully. Never move it suddenly.
  - Keep all persons well away from the load.
  - Never move a load over a person's head.
  - Do not allow anyone to approach the load until it is safely and securely situated on supporting blocks or on the ground.
  - Never attach a sling or chain to the bucket teeth. They may come off, causing the load to fall.

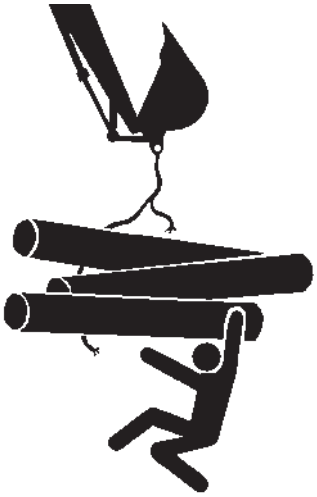

SA-014 ja

Protect Against Flying Debris and Falling Object

- During hammer operation, debris from earth, rock or metal may fly in all directions, resulting in a serious injury or death.
  - When driving the connecting pins in or out, wear hard hat and face shield, goggle or safety glasses.

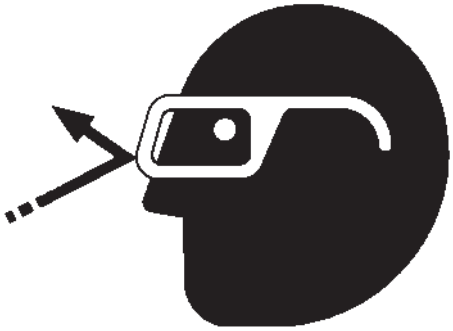

SA-432 ja

- During machine operation, debris from earth, rock or metal may fly off from the track and bucket, potentially resulting in a serious injury or death.
  - Ensure nobody is present in or around the work area while machine is operating.
  - Always close the front windows, doors, door windows and the overhead window when operating the machine.

SA-344 ja

- Falling of accumulated earth or dirt onto people may result in a serious injury or death.
  - Before performing maintenance or inspection under carriage, remove accumulated debris.

SA-527 ja

Park Machine Safely

- To avoid accidents:
  - Park machine on a firm, level surface.
  - Lower bucket and blade to the ground.
  - Set pilot shut-off lever to the LOCK position.
  - Turn auto-idle switch OFF.
  - Run engine at slow idle speed without load for 5 minutes.
  - Turn key switch to OFF to stop engine.
  - Remove the key from the key switch.
  - Close windows, roof vent, and cab door.
  - Lock all access doors and compartments.

SA-2590 ja

SA-390 ja

Handle Fluids Safely–Avoid Fires

- Handle fuel with care; it is highly flammable. If fuel ignites, an explosion and/or a fire may occur, possibly resulting in serious injury or death.
  - Do not refuel the machine while smoking or when near open flame or sparks.
  - Always stop the engine before refueling the machine.
  - Fill the fuel tank outdoors.
  - Discharge static electricity before fueling.
- All fuels, most lubricants, and some coolants are flammable.
  - Store flammable fluids well away from fire hazards.
  - Do not incinerate or puncture pressurized containers.
  - Do not store oily rags on the machine; they can ignite and burn spontaneously.
  - Securely tighten the fuel and oil filler caps.

SA-018 ja

SA-019 ja

Transport Safely

- Take extra care when loading or unloading the machine onto or from a truck or trailer as the machine may turn over.
  - Observe the related regulations and rules for safe transportation.
  - Confirm length, width, height and weight of the machine and select an appropriate truck or trailer for the machine to be transported.
  - Be sure to use a signal person.
  - Always follow the following precautions for loading or unloading:

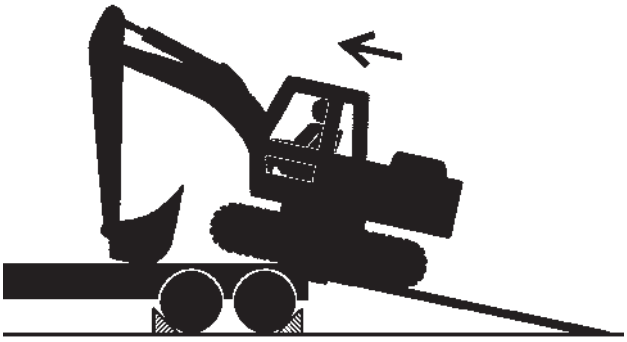

SA-395 ja

1. Place machine and truck or trailer on solid and level ground.
2. Always use a ramp or deck strong enough to support the machine weight to drive on or from a truck or trailer.
3. Fasten operator's seat belt before starting driving the machine.
4. Turn auto-idle switch OFF.
5. Always select the slow speed mode with the travel mode switch.
6. To avoid instability, never load or unload the machine onto or off a truck or trailer using the front attachment functions when driving up or down the ramp.
7. Never steer the machine while on the ramp. If the traveling direction must be changed while on the ramp, unload the machine from the ramp, reposition the machine on the ground, then try loading again.
8. At the top end of the ramp where it meets the flatbed, there is a change in angle. Take care when traveling over it.The machine will tip forward or backward.
9. Place blocks in front of and behind the tires of the machine, if applicable. Securely fasten the machine to the truck or trailer deck with wire ropes.

Be sure to further follow the details described in the "TRANSPORTING" section.

Practice Maintenance Safely

- To avoid accidents:
  - Understand service procedures before starting work.
  - Keep the work area clean and dry.
  - Do not spray water or steam inside cab.
  - Never lubricate or service the machine while the engine is running.
  - Keep hands, feet and clothing away from moving parts.

SA-028 ja

Before servicing the machine:

1. Park the machine on a level surface.
2. Lower the bucket to the ground.
3. Turn the auto-idle switch off.
4. Run the engine at low idle speed without load for 5 minutes.
5. Turn the key switch to OFF to stop engine.
6. Relieve the pressure in the hydraulic system according to the pressure relief procedure. (Refer to chapter-5 "Guide to Releasing Pressure in the Hydraulic Circuit".)
7. Remove the key from the key switch.
8. Attach a "Do Not Operate" tag on the control lever.
9. Set pilot shut-off lever to the LOCK position.
10. Allow the engine to cool.

- If a maintenance procedure must be performed with the engine running, do not leave the machine unattended.
- If the machine must be raised, maintain a 90 to 110˚ angle between the boom and arm. Securely support any machine elements that must be raised for service work.
- Inspect the machine periodically in accordance with the "MAINTENANCE" chapter of this manual and repair or replace as necessary.
- Keep all parts in good condition and properly installed.
- Fix damage immediately. Replace worn or broken parts. Remove any buildup of grease, oil or debris.

SA-527 ja

- When cleaning parts, always use nonflammable detergent oil. Never use highly flammable oil such as fuel oil or gasoline to clean parts or surfaces.
- Turn the battery disconnect switch to OFF before maintaining the electrical systems or performing welding on the machine.
- Sufficiently illuminate the work site. Use a maintenance work light when working under or inside the machine.
- Always use a work light protected with a guard. If the light bulb is broken, spilled fuel, oil, antifreeze fluid, or window washer fluid may catch fire.

SA-037 ja

Warn Others of Service Work

- Unexpected machine movement can cause serious injury.
  - Before performing any work on the machine, attach a "Do Not Operate" tag on the control lever.
    This tag is available from your authorized dealer.

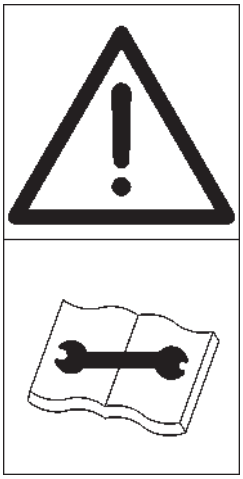

SS2045102-4 ja

Support Machine Properly

- Never attempt to work on the machine without securing the machine first.
  - Always lower the attachment to the ground before you work on the machine.
  - If you must work on a lifted machine or attachment, securely support the machine or attachment. Do not support the machine on cinder blocks, hollow tires, or props that may crumble under continuous load. Do not work under a machine that is supported solely by a jack.

SA-527 ja

Stay Clear of Moving Parts

- Entanglement in moving parts can cause serious injury.
  - To prevent accidents, do not remove guards to ensure that hands, feet, clothing, jewelry and hair do not become entangled when working around rotating parts.

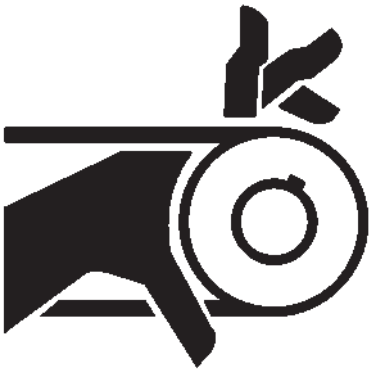

SA-026 ja

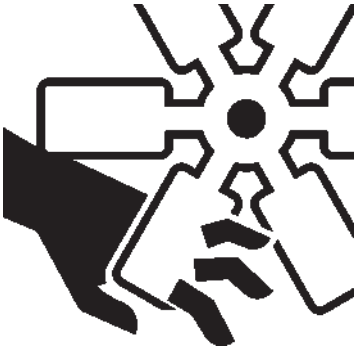

SA-2294 ja

Prevent Parts from Flying

- Grease in the track adjuster is under high pressure. Failure to follow the precautions below may result in serious injury, blindness, or death.
  - Do not attempt to remove GREASE FITTING or VALVE ASSEMBLY.
  - Do not attempt to remove the valve stop plate.
  - As pieces may fly off, be sure to keep body and face away from valve.
  - Never attempt to disassemble the track adjuster. Inadvertent disassembling of the track adjuster may cause the parts such as a spring to fly off, possibly resulting in severe injury or death.

SA-344 ja

- Travel reduction gears are under pressure.
  - As pieces may fly off, be sure to keep body and face away from AIR RELEASE PLUG to avoid injury.
  - GEAR OIL is hot. Wait for GEAR OIL to cool, then gradually loosen AIR RELEASE PLUG to release pressure.

Avoid Injury from Attachment Falling Accident

- Stored attachments such as buckets, hydraulic hammers, and blades can fall and cause serious injury or death.
  - To avoid possible injury from attachment falling accident, use a platform when replacing an attachment.
  - Securely store attachments such as a bucket, blade, breaker and other parts to prevent falling.
  - Keep bystanders away from attachment storage areas.

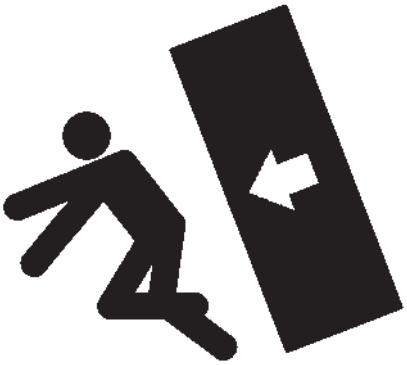

SA-034 ja

Prevent Burns

Hot spraying fluids:

- After operation, engine coolant is hot and under pressure. Hot water or steam is contained in the engine, expansion tank and heater lines.
  Skin contact with escaping hot water or steam can cause severe burns.
  - Avoid possible injury from hot spraying water. DO NOT remove the expansion tank cap until the engine is cooled down. When opening, turn the cap slowly to the first stop. Allow all pressure to be released before removing the cap.

SA-039 ja

The hydraulic oil tank is pressurized. Push the pressure release button on the tank cap to release pressure before carefully removing the cap. Hot fluids and surfaces:

- Engine oil, gear oil and hydraulic oil also become hot during operation.
  The engine, hoses, lines and other parts become hot as well.
- Wait for the oil and components to cool down before starting any maintenance or inspection work.

SA-225 ja

Replace Rubber Hoses Periodically

- Rubber hoses under pressure may break due to aging, fatigue, and abrasion. It is very difficult to gauge the extent of deterioration of rubber hoses by inspection alone. Therefore:
  - Periodically replace the rubber hoses. (See the page of "Periodic replacement of parts" in the operator's manual.)
- Failure to periodically replace rubber hoses may cause a fire, fluid injection into skin, or the front attachment to fall, which may result in serious injury or death.

SA-019 ja

Avoid High-Pressure Fluids

- Fluids such as diesel fuel or hydraulic oil under pressure can penetrate the skin or eyes causing serious injury, blindness or death.
  - Avoid this hazard by relieving pressure before disconnecting hydraulic or other lines.
  - Tighten all connections before applying pressure.
  - Search for leaks with a piece of cardboard; take care to protect hands and body from high-pressure fluids. Wear a face shield or goggles for eye protection.
  - If an accident occurs, see medical assistance immediately. Any fluid injected into the skin must be surgically removed within a few hours or gangrene may result.

SA-031 ja

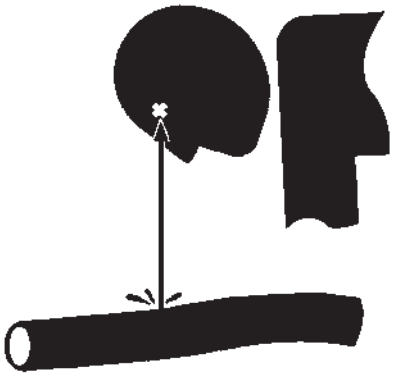

SA-292 ja

SA-044 ja

Prevent Fires

Check for Oil Leaks:

- Fuel, hydraulic oil and lubricant leaks can cause fires.
  - Check for oil leaks due to missing or loose clamps, kinked hoses, damaged lines or hoses that rub against each other, damage to the oil cooler, and loose oil cooler flange bolts.
  - Tighten, repair or replace any missing, loose or damaged clamps, lines, hoses, oil cooler and oil cooler flange bolts.
  - Do not bend or strike high-pressure lines.
  - Never install bent or damaged lines, pipes, or hoses.
  - Replace fuel hoses and hydraulic hoses periodically even if there is no abnormality in their external appearance.

SA-019 ja

Check for Short circuits:

- Short circuits can cause fires.
  - Clean and tighten all electrical connections.
  - Check before each shift or after eight (8) to ten (10) hours operation for loose, kinked, hardened or damaged electrical cables and wires.
  - Check before each shift or after eight (8) to ten (10) hours operation for missing or damaged terminal caps.
  - DO NOT OPERATE MACHINE if cable or wires are loose, kinked, etc.
  - Never attempt to modify electric wirings.

Clean up Flammable Materials:

- Spilled fuel and oil, trash, grease, debris, accumulated dust (such as coal, wood, paper), and other flammable materials may cause fires.
  - Prevent fires by inspecting and cleaning the machine daily, in particular clean high temperature parts such as the exhaust outlet and muffler.
  - Do not wrap high temperature parts such as a muffler or exhaust pipe with oil absorbents.
  - Do not store oily cloths on the machine as they are vulnerable to catching fire.
  - Keep flammable materials away from sparks, hot surfaces, exhaust gases or open flames.
  - Wire screens may be provided for openings in the engine compartment covers to prevent larger flammable materials such as dead leaves from entering. However, small flammable materials which can pass through the wire screen may cause fires. Check and clean the machine every day and immediately remove accumulated flammable materials.

Check Key Switch:

- If a fire breaks out, failure to stop the engine will escalate the fire, hampering fire fighting.
  - Always check key switch function before operating the machine every day:
    1. Start the engine and run it at slow idle.
    2. Turn the key switch to the OFF position to confirm that the engine stops.
  - If any abnormalities are found, be sure to repair them before operating the machine.

Check Heat Shields:

- Damaged or missing heat shields may cause fires.
  - Damaged or missing heat shields must be repaired or replaced before operating the machine.
  - If hydraulic hoses break while the engine cover is open, splattered oil on the high temperature parts such as muffler may cause fire. Always keep the engine cover closed while operating the machine.

Evacuating in Case of Fire

- In case of fire, evacuate the machine in the following way:
  - Stop the engine by turning the key switch to the OFF position if there is time.
  - Leave the machine
  - Use a fire extinguisher if there is time.
- In an emergency, if the cab door or front window can not be opened, break the front or rear window pane with the emergency evacuation hammer to escape from the cab. Read the explanation pages on the Emergency Evacuation Method for details.

SA-393 ja

SS-1510 ja

Beware of Exhaust Fumes

- Prevent asphyxiation. Engine exhaust fumes can cause sickness or death.
  - If you must operate the machine in a building, be sure there is adequate ventilation.
  - White smoke may be generated during the aftertreatment device regeneration. Do not perform aftertreatment device manual regeneration indoor.

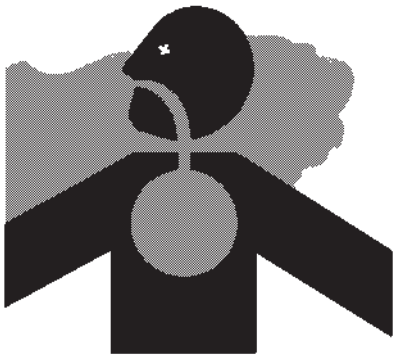

SA-016 ja

Precautions for Welding and Grinding

- Welding may generate gas and/or small fires.
  - Be sure to perform welding in a well ventilated and prepared area. Store flammable materials in a safe place before starting welding.
  - Only qualified personnel should perform welding. Never allow an unqualified person to perform welding.
  - Turn the battery disconnect switch to the OFF position before performing welding on the machine.
- Grinding on the machine may create fire hazards. Store flammable materials in a safe place before starting grinding.

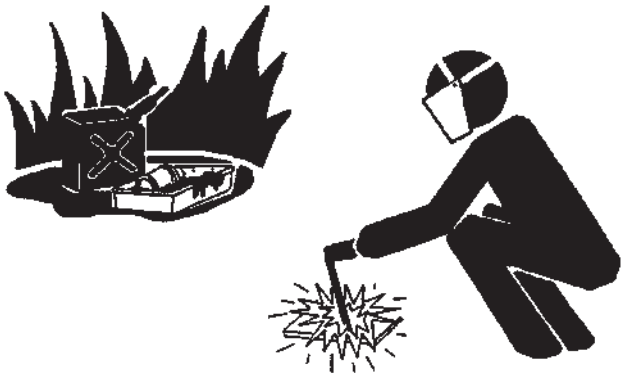

SA-818 ja

- After finishing welding and grinding, recheck that there are no abnormalities such as the area surrounding the welded area still smoldering.

Avoid Heating Near Pressurized Fluid Lines

- Flammable spray can be generated by heating near pressurized fluid lines, resulting in severe burns to yourself and bystanders.
  - Do not heat by welding, soldering, or using a torch near pressurized fluid lines or other flammable materials.
  - Pressurized lines can be accidentally cut when heat goes beyond the immediate flame area. Install temporary fire-resistant guards to protect hoses or other materials before engaging in welding, soldering, etc.

SA-030 ja

Avoid Applying Heat to Lines Containing Flammable Fluids

- Do not weld or cut pipes or tubes that contain flammable fluids.
- Clean pipes and tubes thoroughly with non-flammable solvent before welding or cutting.

Precautions for Handling Accumulator and Gas Damper

High-pressure nitrogen gas is sealed in the accumulator and the gas damper. Inappropriate handling may cause explosion, possibly resulting in serious injury or death.

Strictly comply with the following items:

- Do not disassemble the unit.
- Keep the units away from open flames and fire.
- Do not bore a hole or cut the unit.
- Avoid giving shocks to the unit.
- Respect the environment when disposing the unit. Consult your authorized dealer.

Remove Paint Before Welding or Heating

- Hazardous fumes can be generated when paint is heated by welding, soldering or using a torch. If inhaled, these fumes may cause sickness.
  - Avoid potentially toxic fumes and dust.
  - Work outside in a well-ventilated area. Dispose of paint and solvent properly.
  - Remove paint before welding or heating:
    1. If you sand or grind paint, avoid breathing the dust.
       Wear an approved respirator.
    2. If you use solvent or paint stripper, remove stripper with soap and water before welding. Remove solvent or paint stripper containers and other flammable materials from area. Allow fumes to disperse at least 15 minutes before welding or heating.

SA-029 ja

Beware of Asbestos and Silica Dust and Other Contamination

- Take care not to inhale dust produced in the work site. Keep cabin door and windows closed and install additional filtration systems if necessary.
  - Depending on the work site conditions, the risk of inhaling asbestos fiber, silica dust or other contaminations may exist.
  - Keep bystanders out of the work site during operation.

SA-029 ja

Prevent Battery Explosions

- Battery gas can explode.
  - Keep sparks, and flames away from the top of battery.
  - Never check battery charge by placing a metal object across the posts. Use a voltmeter or hydrometer.
  - Do not charge a frozen battery; it may explode. Gently warm the battery to 16 ˚C (60 ˚F) first.
  - Do not continue to use or charge the battery when electrolyte level is lower than specified. Explosion of the battery may result.
  - Loose terminals may produce sparks. Securely tighten all terminals.
  - Connect terminals to the correct electrical poles. Failure to do so may cause damage to the electrical parts or fire.

SA-032 ja

- Battery electrolyte is poisonous. If the battery should explode, battery electrolyte may be splashed into eyes, possibly resulting in blindness.
  - Be sure to wear eye protection when checking electrolyte specific gravity.

Service Air Conditioning System Safely

- If spilled onto skin, refrigerant may cause a cold contact burn.
  - The air conditioning system must be maintained by qualified persons only. Refer to the instructions provided by the supplier when handling the refrigerant.
  - Use a recovery and recycling system to avoid leaking refrigerant into the atmosphere.
  - Never touch the refrigerant.

SA-405 ja

Handle Chemical Products Safely

- Direct exposure to hazardous chemicals can cause serious injury. Potentially hazardous chemicals used with your machine include such items as lubricants, coolants, paints, and adhesives.
  - Safety Data Sheet (SDS) provides specific details on chemical products: physical and health hazards, safety procedures, and emergency response techniques.
  - Check the SDS before you start any job using a hazardous chemical. That way you will know exactly what the risks are and how to do the job safely. Then follow procedures and use recommended equipment.

SA-2579 ja

  - See your authorized dealer for SDS's (available only in English) on chemical products used with your machine.

Dispose of Waste Properly

- Improperly disposing of waste can threaten the environment and ecology. Potentially harmful waste used with Hitachi equipment includes such items as oil, fuel, coolant, DEF, brake fluid, filters, and batteries.
  - Use leakproof containers when draining fluids. Do not use food or beverage containers that may mislead someone into drinking from them.
  - Do not pour waste onto the ground, down a drain, or into any water source.
  - Air conditioning refrigerants escaping into the air damage the Earth's atmosphere. Government regulations may require a certified air conditioning service center to recover and recycle used air conditioning refrigerants.

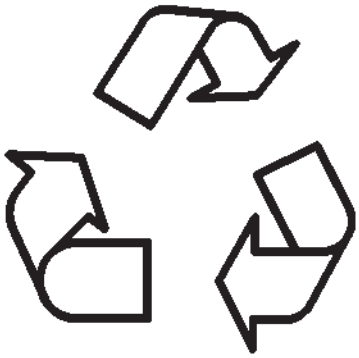

SA-226 ja

  - Inquire on the proper way to recycle or dispose of waste from your local environmental or recycling center, or from your authorized dealer.

Never Ride Attachment

Never allow anyone to ride on attachments or the load. This is an extremely dangerous practice.

Notes on Aftertreatment Device

The aftertreatment device removes particulate matter (PM) and NOx (Nitrogen Oxide) from the exhaust gas. Do not make any modifications affecting the functionality of the aftertreatment device. In case of damage to the aftertreatment device, have its functionality checked by your authorized dealer.

Exhaust gas from the aftertreatment device, muffler, exhaust piping and tail piping becomes hot during and right after engine running and regeneration of aftertreatment device. Keep away from the exhaust system or hot gas from the exhaust piping during regeneration. Be careful to avoid skin contact with exhaust gas or hot sufaces. It may cause severe burns.

- White smoke may be generated during aftertreatment device regeneration. Do not attempt to perform aftertreatment device manual regeneration in a badly ventilated area.
- Do not touch water coming directly out of the aftertreatment device. The water is mildly-acidic by oxidation catalyst mounted in the aftertreatment device. If filter water spills on your skin, immediately flush with clean water.

Precautions for Communication Terminal

- Non-compliant radio communication equipment and associated parts, and/or improper installation of radio communication equipment may affect and disturb the machine's electronic parts, potentially causing involuntary movement of the machine.
- Improper installation of electrical equipment may cause machine failure and/or a fire on the machine.
- Be sure to consult your authorized dealer when installing radio communication equipment or additional electrical parts, or when replacing electrical parts.

Never attempt to disassemble or modify the electrical/electronic components. If replacement or modification of such components is required, contact your authorized dealer.

Precautions for Communication Terminal Equipment

This machine is installed with a communication terminal emitting radio waves behind the operator's seat. There is a possibility that a medical device, including an implantable device such as a cardiac pacemaker, could be affected and malfunction due to the electrical waves emitted from the communication terminal.

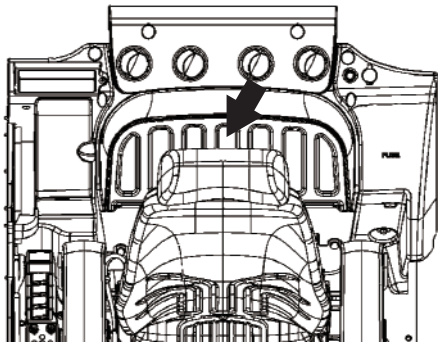

SA-2759-1 ja

For those who uses medical devices as above should adjust the operator's seat position to keep the distance between medical device and the communication terminal are at least 15 centimeters (6 inches) at all times.

If this condition cannot be met, please contact your authorized dealer and have the person in charge stop the communication terminal from functioning completely and confirm that no radio waves are emitted before operating the machine.

The effect of radio waves from communication terminal on the human body can be evaluated by measuring Specific Absorption Rate ("SAR"), which is a measure of the amount of radio frequency energy absorbed by the body when using a wireless application such as a mobile phone.

All communication terminal installed in this machine comply with technical standards and international guidelines regarding the absorption of radio waves by the human body.

There are two SAR measurement method and the safety standards, 2.0 W/kg (measured by 10 g per unit) and 1.6 W/kg (measured by 1 g per unit), either one is adopted depending on the country.

This machine is equipped with a communication terminal model HPRO-100, HPRO-4G, or QConnect. Consult your authorized dealer for the model of communication terminal.

Specific Absorption Rate ("SAR") of communication terminal.

The values in ( ) are based on Taiwanese regulations.

	HPRO-100	HPRO-4G *	QConnect *
1.6 W/kg (1 g/unit)	0.51 W/kg	0.91 W/kg	-
2.0 W/kg (10 g/unit)	0.12 W/kg	0.50 W/kg	-
		(0.31 W/kg)	(0.25 W/kg)

This data was measured by having each type of communication terminal used with this machine, and a human body set apart by 3 centimeters (1.18 inches).

* Precautions in Taiwan:

Under the Taiwanese regulations, the maximum SAR value is set as the standard value 2 W/kg. The actual measurement value is 0.25 W/kg using QConnect, and 0.31 W/kg using HPRO-4G.

Notes on Protection by Operator's Station when the Machine Rolls Over

The cab incorporates a structure to protect the operator by absorbing impact energy when the machine rolls over (Roll-Over Protective Structure (ROPS)). However, when modifying the machine or installing a special attachment causing the machine mass to exceed the maximum operating mass indicated on the ROPS certification label, the cab cannot fulfill its protective function, possibly causing serious injury or death.

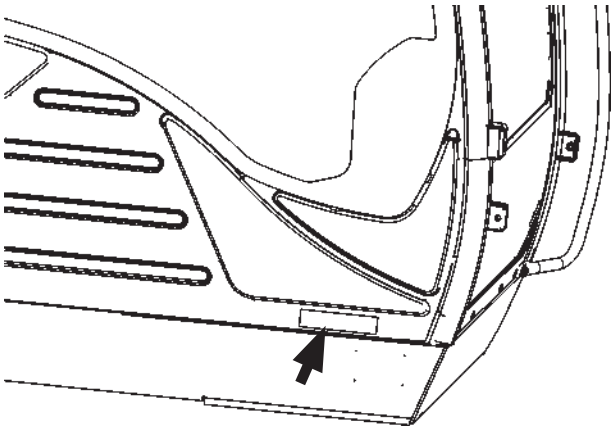

SS-3636-1 ja

In order to safeguard the protective structure, follow the instructions below.

- Consult your authorized dealer before welding parts or drilling a hole on the cab. Modifications to the structure which possibly reduce the cab strength are not allowed.
- Be sure to always fasten the seat belt when operating the machine. If the machine rolls over without operator having fastening the seat belt, the operator may be thrown out of the cab and/or may become crushed under the machine.

The ROPS certification is valid under the following conditions.

- The actual machine mass is lower than the maximum operating mass described in the ROPS certification.
- The ROPS is properly installed.
- No modification is made to the ROPS.
- The ROPS is free from damage.

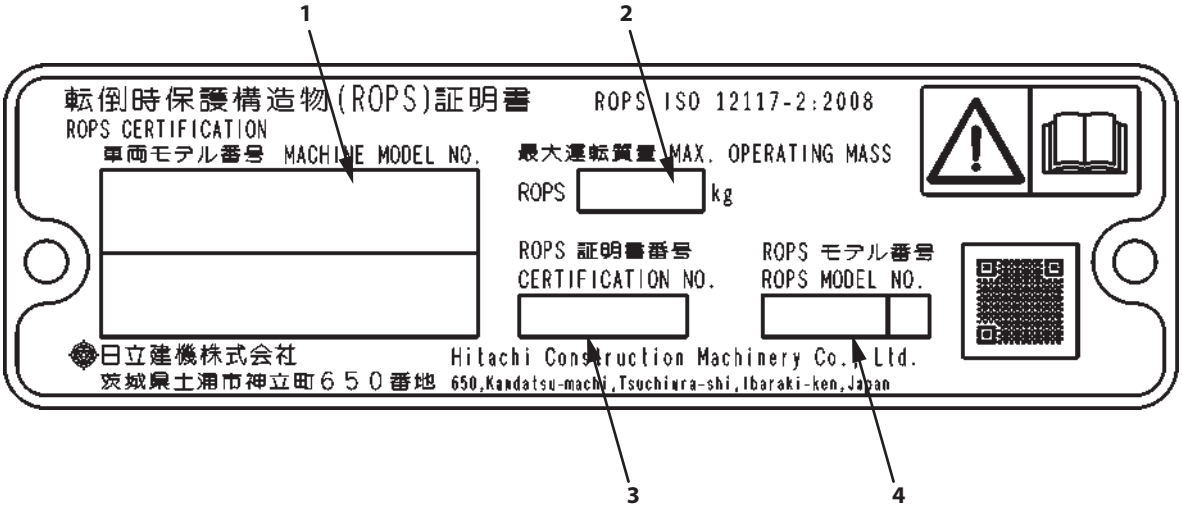

SS-3944-1 ja

1	Applicable Machine Model Number	2	Maximum operating mass assuring the ROPS	3	Certificate number of the ROPS	4	ROPS Model Number

Visibility Map for Machine Model ZX120-7 class with Monoblock Boom Personal Hazard

This machine complies with the essential health and safety requirements for visibility set out by Machinery Directive 2006/42/EC. The map shows the residual maskings (blind spots) observed by a seated operator (wearing the recommended seat restraint) in the cab using direct vision and the standard visual aids supplied with the machine. Additionally, operators are encouraged to adjust the mirrors provided to the machine to show the area as shown below.

This map shows an approximation of the residual masking. This can be used as a guide when conducting a site risk assessment, utilized for site management and to consider additional visual aids.

Conditions: Driver's visibility on 1mRB and VTC are evaluated under ISO 5006.

Test Height (on 1mRB):	1.2 m
(1mRB to VTC/on VTC):	Ground Level
Operator eye Height:	1.2 m from the cab floor
Machine Configuration:	Monoblock Boom
Machine Position:	Travel Position (For the detail position, see the image below)
Applicable visual aids:	1. standard mirror (s) 2. standard camera (s)

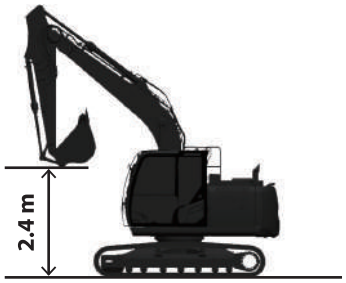

Machine Position Image

MDFY-VM-059-1 en_GB

⊗ : Operator's eye point
A : 1 m Rectangular Boundary (1mRB)
B : 12 m Visibility Test Circle (VTC)
⊖ : Standard Mirror (s)
⦶ : Standard camera (s)

: Masking area
: Mirror visibility
: Camera visibility

Monitor display
Surrounding Image

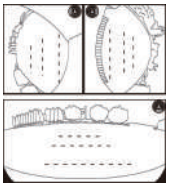

Monitor display
Image to Left Side + Image to Right Side + Image to Rear

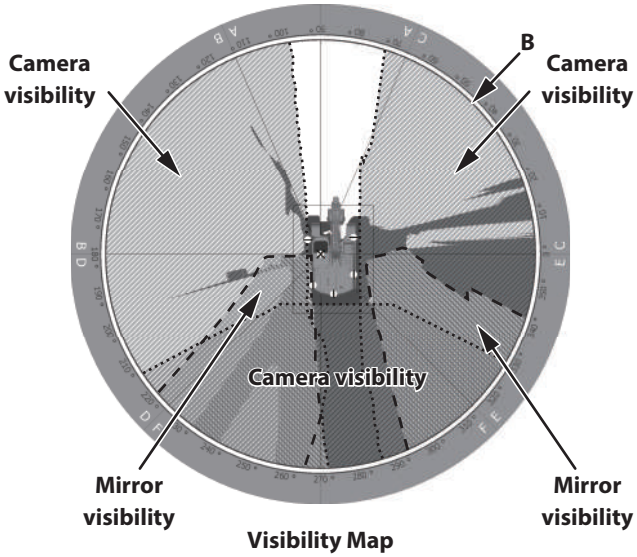

Visibility Map
"Surrounding Image" "Image to Left Side + Image to Right Side + Image to Rear"

MDFY-VM-031-1 en_GB

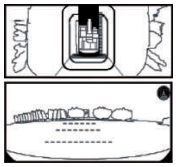

Monitor display
Surrounding Image + Image to Rear

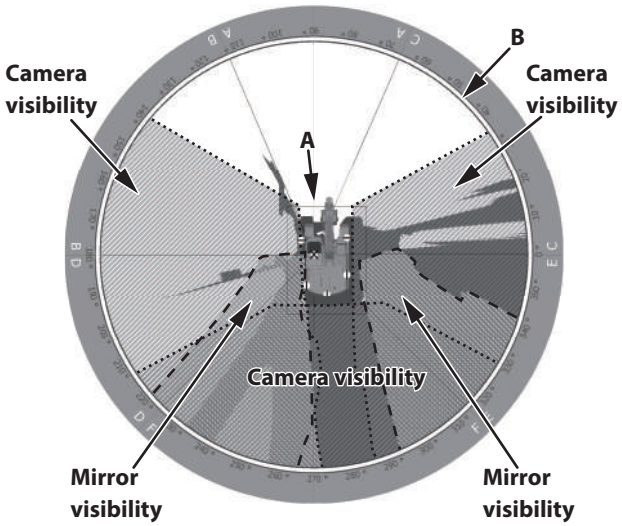

Visibility Map
"Surrounding Image + Image to Rear"

MDFY-VM-075-1 en_GB

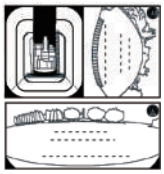

Monitor display
Surrounding Image + Image to Right Side + Image to Rear

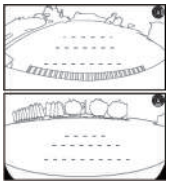

Monitor display
Image to Right Side + Image to Rear

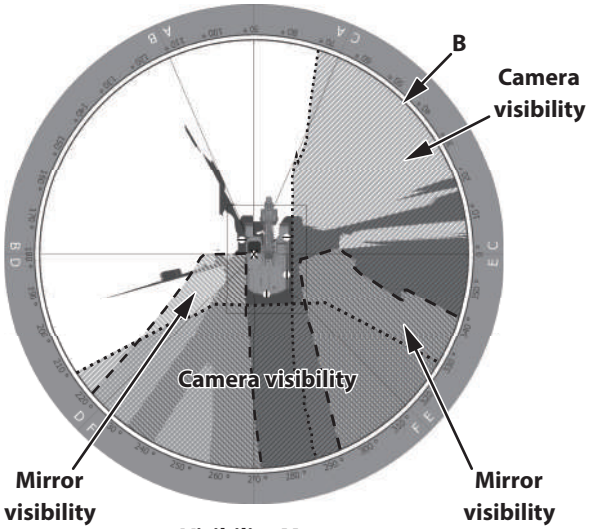

Visibility Map
"Surrounding Image + Image to Right Side + Image to Rear"
"Image to Right Side + Image to Rear"

MDFY-VM-032-1 en_GB

Visibility Map for Machine Model ZX120-7 class with 2-Piece Boom Personal Hazard

This machine complies with the essential health and safety requirements for visibility set out by Machinery Directive 2006/42/EC. The map shows the residual maskings (blind spots) observed by a seated operator (wearing the recommended seat restraint) in the cab using direct vision and the standard visual aids supplied with the machine. Additionally, operators are encouraged to adjust the mirrors provided to the machine to show the area as shown below.

This map shows an approximation of the residual masking. This can be used as a guide when conducting a site risk assessment, utilized for site management and to consider additional visual aids.

Conditions: Driver's visibility on 1mRB and VTC are evaluated under ISO 5006.

Test Height (on 1mRB):	1.2 m
(1mRB to VTC/on VTC):	Ground Level
Operator eye Height:	1.2 m from the cab floor
Machine Configuration:	2-Piece Boom
Machine Position:	Travel Position (For the detail position, see the image below)
Applicable visual aids:	1. standard mirror (s) 2. standard camera (s)

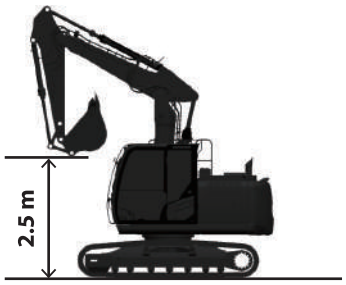

Machine Position Image

MDFY-VM-060-1 en_GB

⊗ : Operator's eye point
A : 1 m Rectangular Boundary (1mRB)
B : 12 m Visibility Test Circle (VTC)
⊖ : Standard Mirror (s)
⦶ : Standard camera (s)

: Masking area
: Mirror visibility
: Camera visibility

Monitor display
Surrounding Image

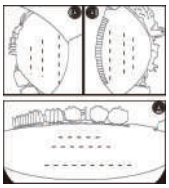

Monitor display
Image to Left Side + Image to Right Side + Image to Rear

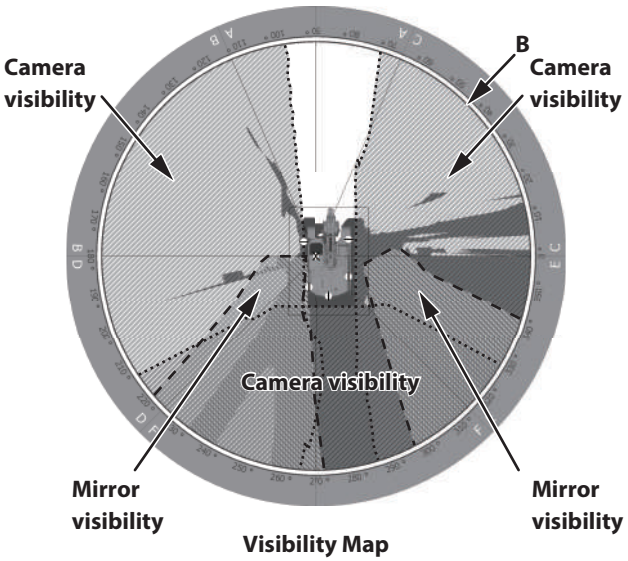

Visibility Map
"Surrounding Image" "Image to Left Side + Image to Right Side + Image to Rear"

MDFY-VM-033-1 en_GB

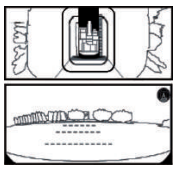

Monitor display
Surrounding Image + Image to Rear

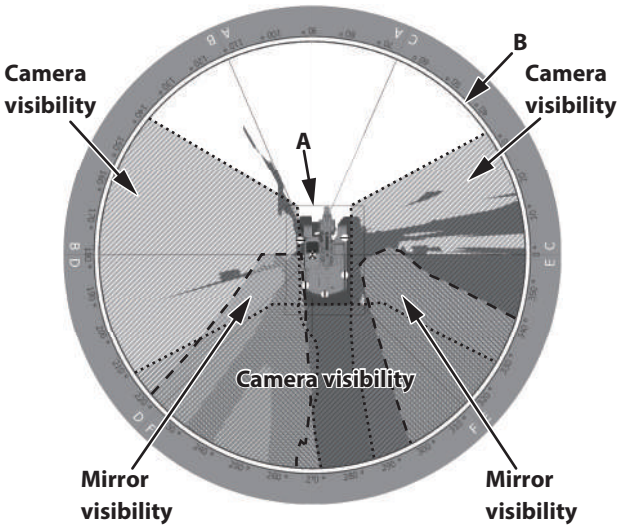

Visibility Map
"Surrounding Image + Image to Rear"

MDFY-VM-076-1 en_GB

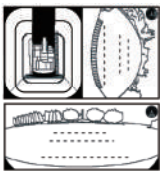

Monitor display
Surrounding Image + Image to Right Side + Image to Rear

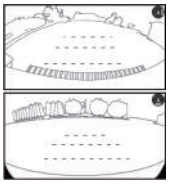

Monitor display
Image to Right Side + Image to Rear

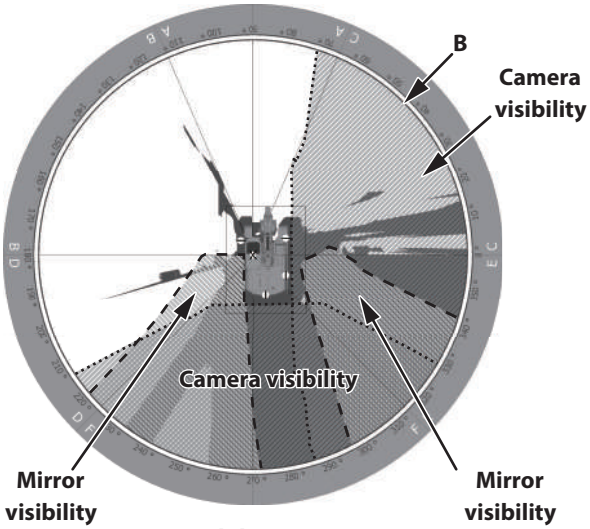

Visibility Map
"Surrounding Image + Image to Right Side + Image to Rear"
"Image to Right Side + Image to Rear"

MDFY-VM-034-1 en_GB

Visibility Map for Machine Model ZX160-7 class with Monoblock Boom Personal Hazard

This machine complies with the essential health and safety requirements for visibility set out by Machinery Directive 2006/42/EC. The map shows the residual maskings (blind spots) observed by a seated operator (wearing the recommended seat restraint) in the cab using direct vision and the standard visual aids supplied with the machine. Additionally, operators are encouraged to adjust the mirrors provided to the machine to show the area as shown below.

This map shows an approximation of the residual masking. This can be used as a guide when conducting a site risk assessment, utilized for site management and to consider additional visual aids.

Conditions: Driver's visibility on 1mRB and VTC are evaluated under ISO 5006.

Test Height (on 1mRB):	1.2 m
(1mRB to VTC/on VTC):	Ground Level
Operator eye Height:	1.2 m from the cab floor
Machine Configuration:	Mono Boom
Machine Position:	Travel Position (For the detail position, see the image below)
Applicable visual aids:	1. standard mirror (s) 2. standard camera (s)

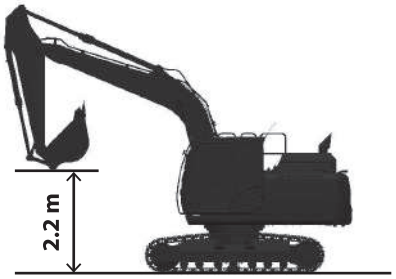

Machine Position Image

MDFY-VM-077-1 en_GB

⊗ : Operator's eye point
A : 1 m Rectangular Boundary (1mRB)
B : 12 m Visibility Test Circle (VTC)
⊖ : Standard Mirror (s)
⦶ : Standard camera (s)

: Masking area
: Mirror visibility
: Camera visibility

Monitor display
Surrounding Image

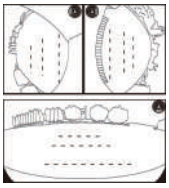

Monitor display
Image to Left Side + Image to Right Side + Image to Rear

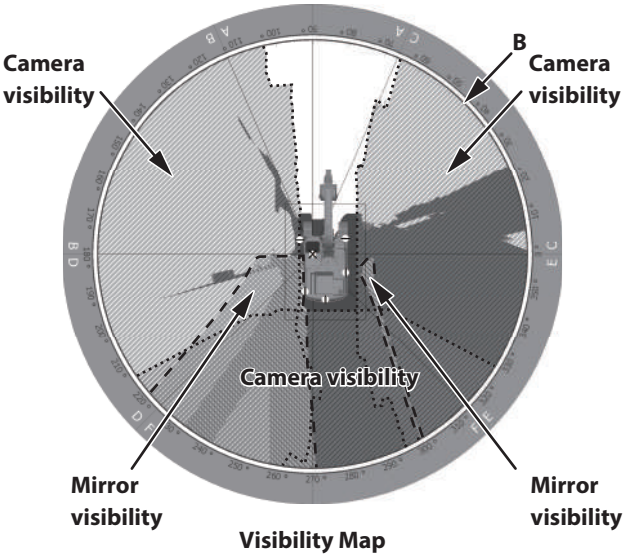

Visibility Map
"Surrounding Image" "Image to Left Side + Image to Right Side + Image to Rear"

MDFY-VM-035-1 en_GB

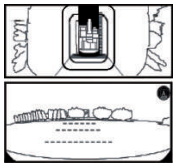

Monitor display
Surrounding Image + Image to Rear

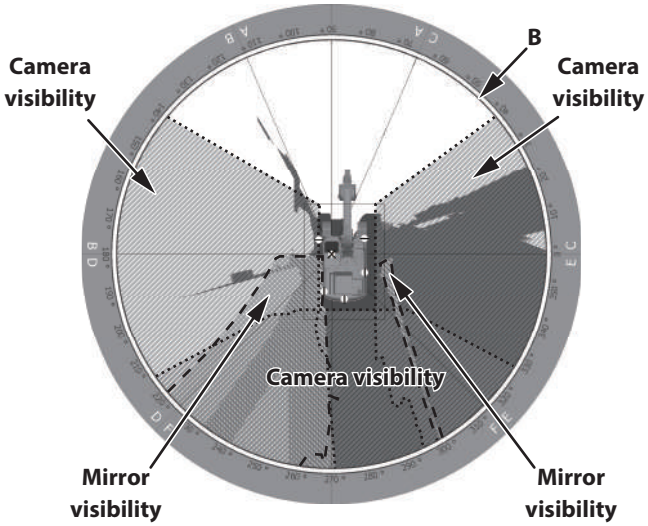

Visibility Map
"Surrounding Image + Image to Rear"

MDFY-VM-036-1 en_GB

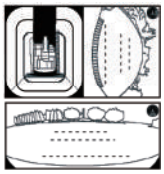

Monitor display
Surrounding Image + Image to Right Side + Image to Rear

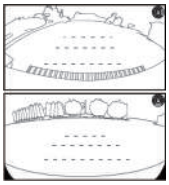

Monitor display
Image to Right Side + Image to Rear

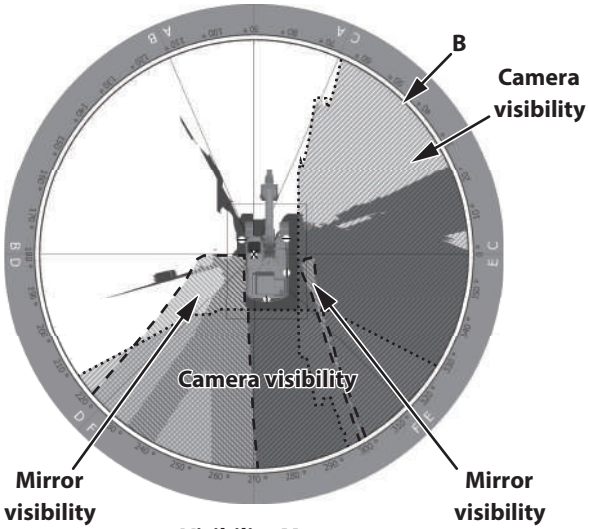

Visibility Map
"Surrounding Image + Image to Right Side + Image to Rear"
"Image to Right Side + Image to Rear"

MDFY-VM-037-1 en_GB

Visibility Map for Machine Model ZX160-7 class with 2-Piece Boom Personal Hazard

This machine complies with the essential health and safety requirements for visibility set out by Machinery Directive 2006/42/EC. The map shows the residual maskings (blind spots) observed by a seated operator (wearing the recommended seat restraint) in the cab using direct vision and the standard visual aids supplied with the machine. Additionally, operators are encouraged to adjust the mirrors provided to the machine to show the area as shown below.

This map shows an approximation of the residual masking. This can be used as a guide when conducting a site risk assessment, utilized for site management and to consider additional visual aids.

Conditions: Driver's visibility on 1mRB and VTC are evaluated under ISO 5006.

Test Height (on 1mRB):	1.2 m
(1mRB to VTC/on VTC):	Ground Level
Operator eye Height:	1.2 m from the cab floor
Machine Configuration:	2-Piece Boom
Machine Position:	Travel Position (For the detail position, see the image below)
Applicable visual aids:	1. standard mirror (s) 2. standard camera (s)

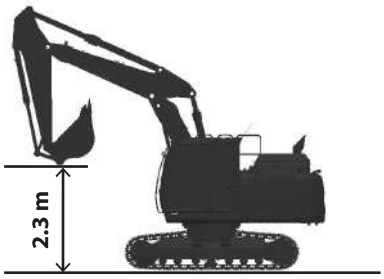

Machine Position Image

MDFY-VM-078-1 en_GB

⊗ : Operator's eye point
A : 1 m Rectangular Boundary (1mRB)
B : 12 m Visibility Test Circle (VTC)
⊖ : Standard Mirror (s)
⦶ : Standard camera (s)

: Masking area
: Mirror visibility
: Camera visibility

Monitor display
Surrounding Image

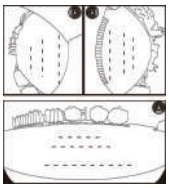

Monitor display
Image to Left Side + Image to Right Side + Image to Rear

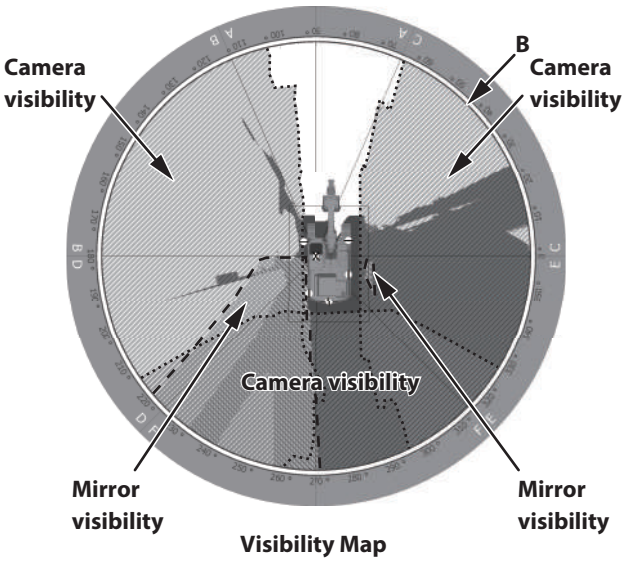

Visibility Map
"Surrounding Image" "Image to Left Side + Image to Right Side + Image to Rear"

MDFY-VM-038-1 en_GB

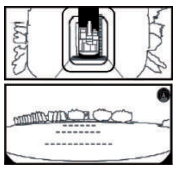

Monitor display
Surrounding Image + Image to Rear

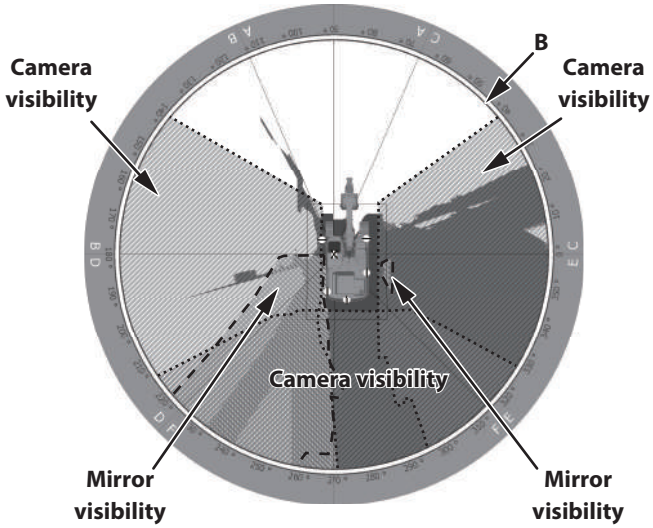

Visibility Map
"Surrounding Image + Image to Rear"

MDFY-VM-039-1 en_GB

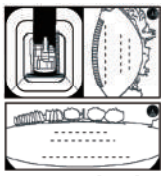

Monitor display
Surrounding Image + Image to Right Side + Image to Rear

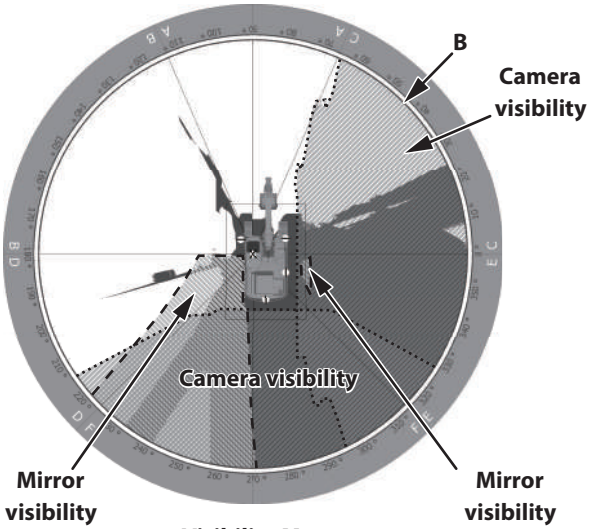

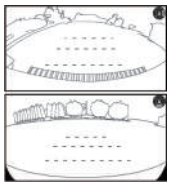

Monitor display
Image to Right Side + Image to Rear

Visibility Map
"Surrounding Image + Image to Right Side + Image to Rear"
"Image to Right Side + Image to Rear"

MDFY-VM-040-1 en_GB

Visibility Map for Machine Model ZX180-7 class with Monoblock Boom Personal Hazard

This machine complies with the essential health and safety requirements for visibility set out by Machinery Directive 2006/42/EC. The map shows the residual maskings (blind spots) observed by a seated operator (wearing the recommended seat restraint) in the cab using direct vision and the standard visual aids supplied with the machine. Additionally, operators are encouraged to adjust the mirrors provided to the machine to show the area as shown below.

This map shows an approximation of the residual masking. This can be used as a guide when conducting a site risk assessment, utilized for site management and to consider additional visual aids.

Conditions: Driver's visibility on 1mRB and VTC are evaluated under ISO 5006.

Test Height (on 1mRB):	1.2 m
(1mRB to VTC/on VTC):	Ground Level
Operator eye Height:	1.2 m from the cab floor
Machine Configuration:	Mono Boom
Machine Position:	Travel Position (For the detail position, see the image below)
Applicable visual aids:	1. standard mirror (s) 2. standard camera (s)

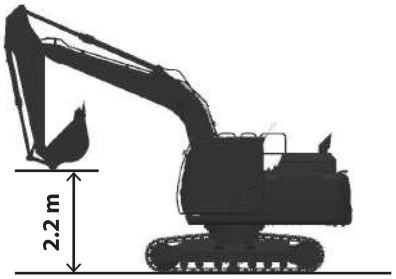

Machine Position Image

MDFY-VM-077-1 en_GB

⊗ : Operator's eye point
A : 1 m Rectangular Boundary (1mRB)
B : 12 m Visibility Test Circle (VTC)
⊖ : Standard Mirror (s)
⦶ : Standard camera (s)

: Masking area
: Mirror visibility
: Camera visibility

Monitor display
Surrounding Image

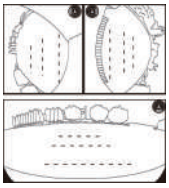

Monitor display
Image to Left Side + Image to Right Side + Image to Rear

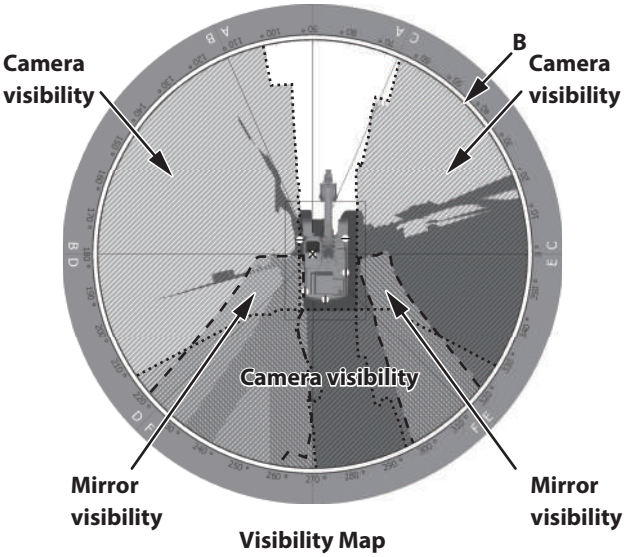

Visibility Map
"Surrounding Image" "Image to Left Side + Image to Right Side + Image to Rear"

MDFY-VM-041-1 en_GB

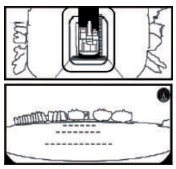

Monitor display
Surrounding Image + Image to Rear

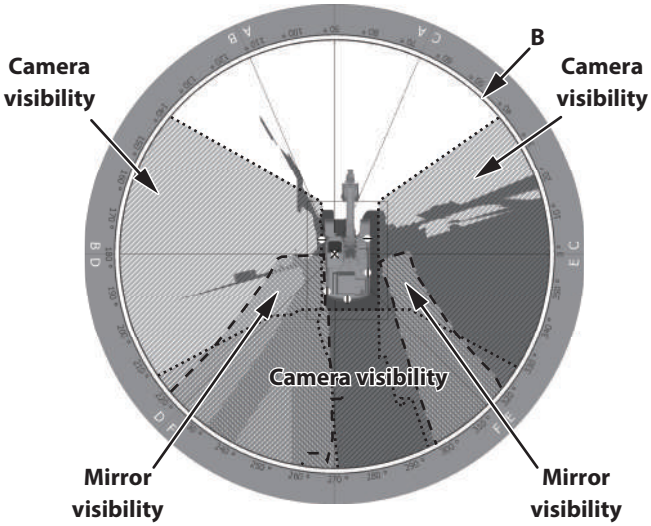

Visibility Map
"Surrounding Image + Image to Rear"

MDFY-VM-042-1 en_GB

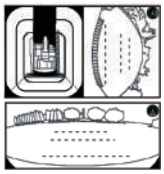

Monitor display
Surrounding Image + Image to Right Side + Image to Rear

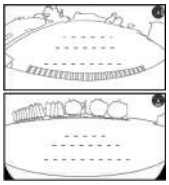

Monitor display
Image to Right Side + Image to Rear

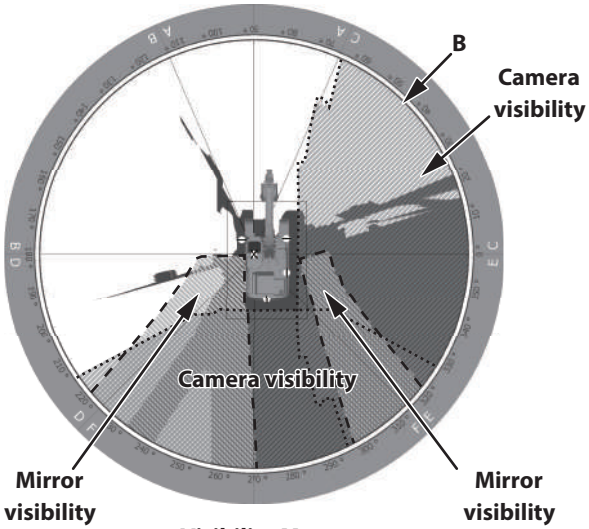

Visibility Map
"Surrounding Image + Image to Right Side + Image to Rear"
"Image to Right Side + Image to Rear"

MDFY-VM-043-1 en_GB

Visibility Map for Machine Model ZX180-7 class with 2-Piece Boom Personal Hazard

This machine complies with the essential health and safety requirements for visibility set out by Machinery Directive 2006/42/EC. The map shows the residual maskings (blind spots) observed by a seated operator (wearing the recommended seat restraint) in the cab using direct vision and the standard visual aids supplied with the machine. Additionally, operators are encouraged to adjust the mirrors provided to the machine to show the area as shown below.

This map shows an approximation of the residual masking. This can be used as a guide when conducting a site risk assessment, utilized for site management and to consider additional visual aids.

Conditions: Driver's visibility on 1mRB and VTC are evaluated under ISO 5006.

Test Height (on 1mRB):	1.2 m
(1mRB to VTC/on VTC):	Ground Level
Operator eye Height:	1.2 m from the cab floor
Machine Configuration:	2-Piece Boom
Machine Position:	Travel Position (For the detail position, see the image below)
Applicable visual aids:	1. standard mirror (s) 2. standard camera (s)

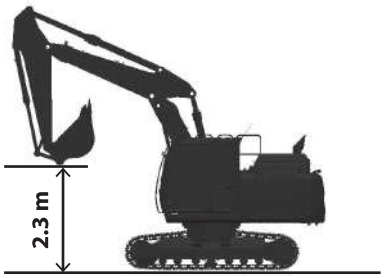

Machine Position Image

MDFY-VM-078-1 en_GB

⊗ : Operator's eye point
A : 1 m Rectangular Boundary (1mRB)
B : 12 m Visibility Test Circle (VTC)
⊖ : Standard Mirror (s)
⦶ : Standard camera (s)

: Masking area
: Mirror visibility
: Camera visibility

Monitor display
Surrounding Image

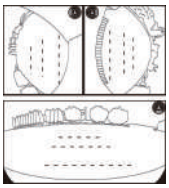

Monitor display
Image to Left Side + Image to Right Side + Image to Rear

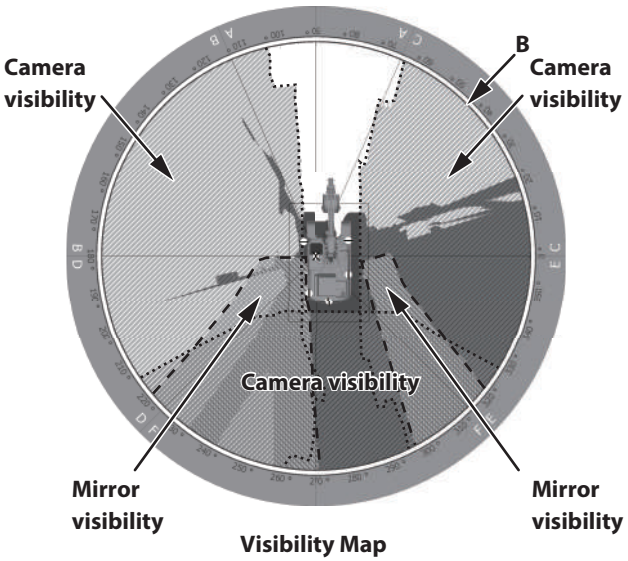

Visibility Map
"Surrounding Image" "Image to Left Side + Image to Right Side + Image to Rear"

MDFY-VM-044-1 en_GB

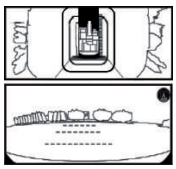

Monitor display
Surrounding Image + Image to Rear

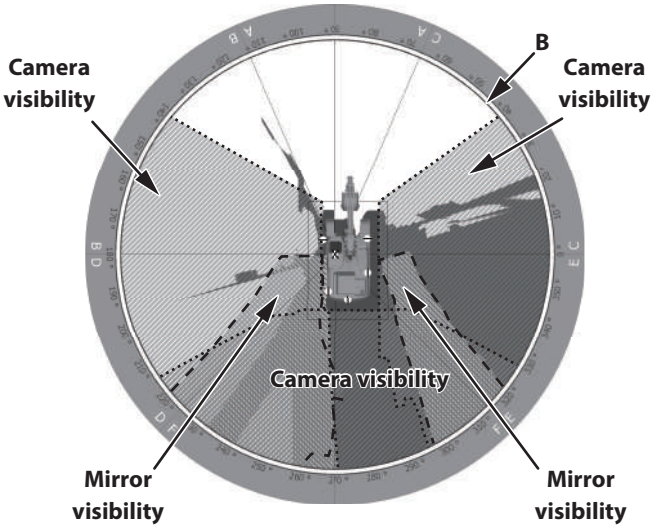

Visibility Map
"Surrounding Image + Image to Rear"

MDFY-VM-045-1 en_GB

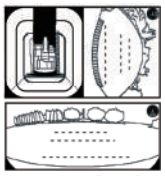

Monitor display
Surrounding Image + Image to Right Side + Image to Rear

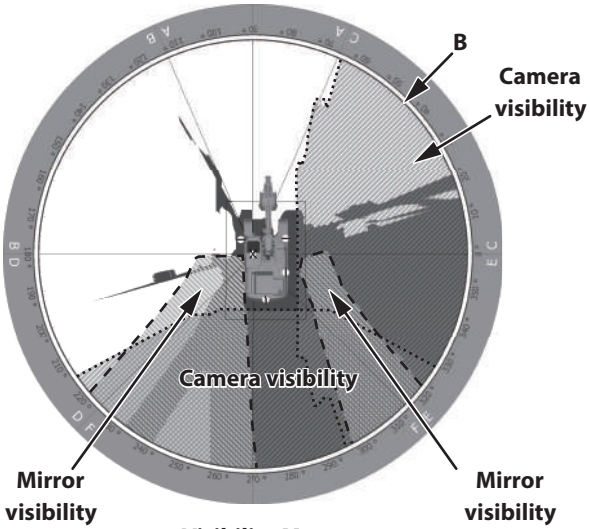

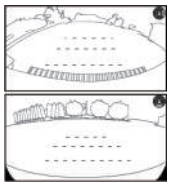

Monitor display
Image to Right Side + Image to Rear

Visibility Map
"Surrounding Image + Image to Right Side + Image to Rear"
"Image to Right Side + Image to Rear"

MDFY-VM-046-1 en_GB

Visibility Map for Machine Model ZX210LC-7 with Monoblock Boom Personal Hazard

This machine complies with the essential health and safety requirements for visibility set out by Machinery Directive 2006/42/EC. The map shows the residual maskings (blind spots) observed by a seated operator (wearing the recommended seat restraint) in the cab using direct vision and the standard visual aids supplied with the machine. Additionally, operators are encouraged to adjust the mirrors provided to the machine to show the area as shown below.

This map shows an approximation of the residual masking. This can be used as a guide when conducting a site risk assessment, utilized for site management and to consider additional visual aids.

Conditions: Driver's visibility on 1mRB and VTC are evaluated under ISO 5006.

Test Height (on 1mRB):	1.2 m
(1mRB to VTC/on VTC):	Ground Level
Operator eye Height:	1.2 m from the cab floor
Machine Configuration:	Monoblock Boom
Machine Position:	Travel Position (For the detail position, see the image below)
Applicable visual aids:	1. standard mirror (s)
	2. standard camera (s)

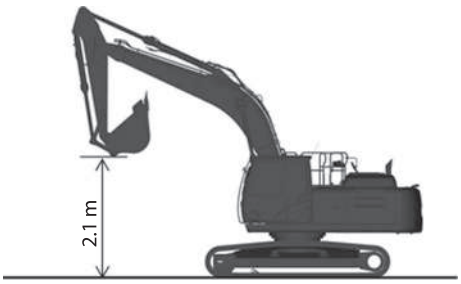

Machine Position Image

MDC1-VM-021 en_GB

⊗ : Operator's eye point
A : 1 m Rectangular Boundary (1mRB)
B : 12 m Visibility Test Circle (VTC)
⊖ : Standard Mirror (s)
⦶ : Standard camera (s)

: Masking area
: Mirror visibility
: Camera visibility

Monitor display
Surrounding Image

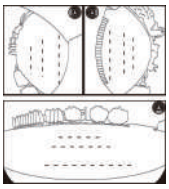

Monitor display
Image to Left Side + Image to Right Side + Image to Rear

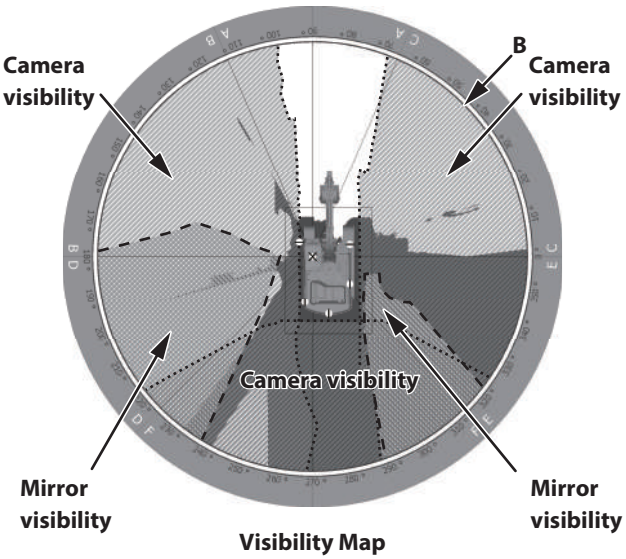

Visibility Map
"Surrounding Image" "Image to Left Side + Image to Right Side + Image to Rear"

MDFY-VM-047-1 en_GB

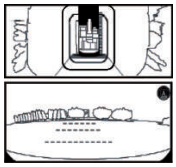

Monitor display
Surrounding Image + Image to Rear

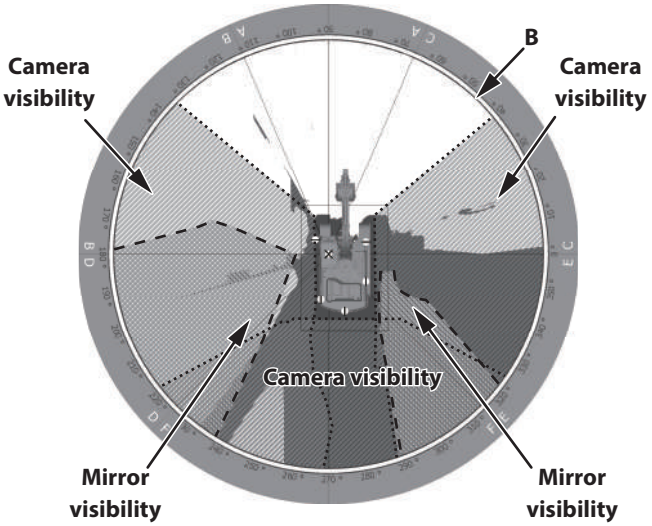

Visibility Map
"Surrounding Image + Image to Rear"

MDFY-VM-048-1 en_GB

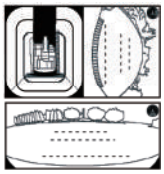

Monitor display
Surrounding Image + Image to Right Side + Image to Rear

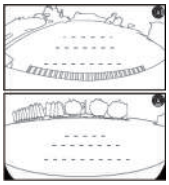

Monitor display
Image to Right Side + Image to Rear

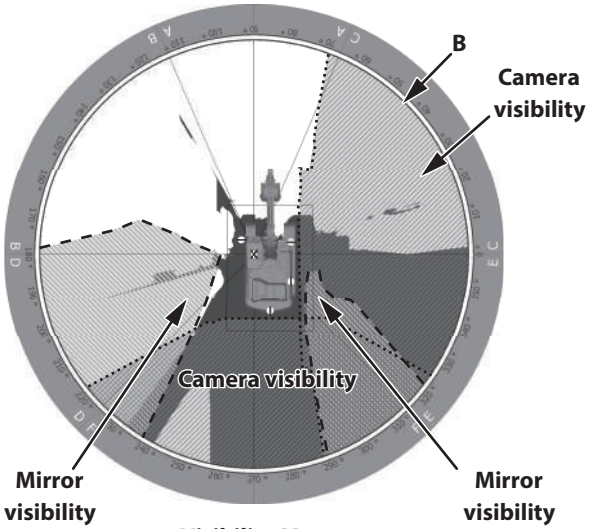

Visibility Map
"Surrounding Image + Image to Right Side + Image to Rear"
"Image to Right Side + Image to Rear"

MDFY-VM-049-1 en_GB

Visibility Map for Machine Model ZX210LC-7 with 2-Piece Boom Personal Hazard

This machine complies with the essential health and safety requirements for visibility set out by Machinery Directive 2006/42/EC. The map shows the residual maskings (blind spots) observed by a seated operator (wearing the recommended seat restraint) in the cab using direct vision and the standard visual aids supplied with the machine. Additionally, operators are encouraged to adjust the mirrors provided to the machine to show the area as shown below.

This map shows an approximation of the residual masking. This can be used as a guide when conducting a site risk assessment, utilized for site management and to consider additional visual aids.

Conditions: Driver's visibility on 1mRB and VTC are evaluated under ISO 5006.

Test Height (on 1mRB):	1.2 m
(1mRB to VTC/on VTC):	Ground Level
Operator eye Height:	1.2 m from the cab floor
Machine Configuration:	2-Piece Boom
Machine Position:	Travel Position (For the detail position, see the image below)
Applicable visual aids:	1. standard mirror (s) 2. standard camera (s)

Machine Position Image

MDC1-VM-023 en_GB

⊗ : Operator's eye point
A : 1 m Rectangular Boundary (1mRB)
B : 12 m Visibility Test Circle (VTC)
⊖ : Standard Mirror (s)
⦶ : Standard camera (s)

: Masking area
: Mirror visibility
: Camera visibility

Monitor display
Surrounding Image

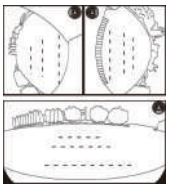

Monitor display
Image to Left Side + Image to Right Side + Image to Rear

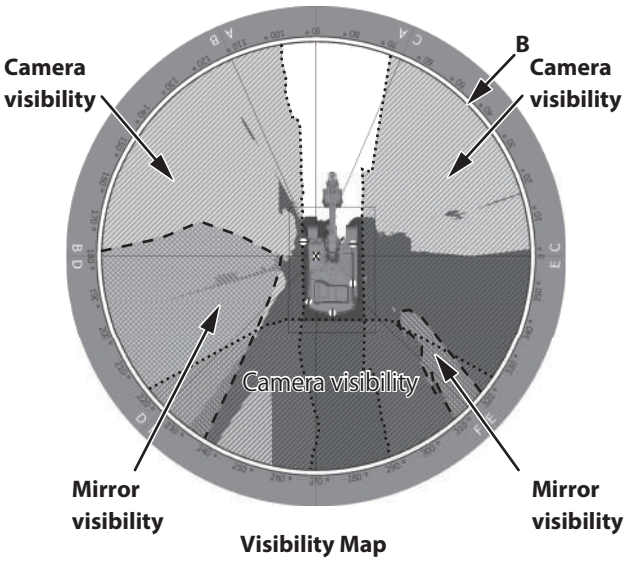

Visibility Map
"Surrounding Image" "Image to Left Side + Image to Right Side + Image to Rear"

MDFY-VM-050-1 en_GB

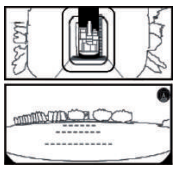

Monitor display
Surrounding Image + Image to Rear

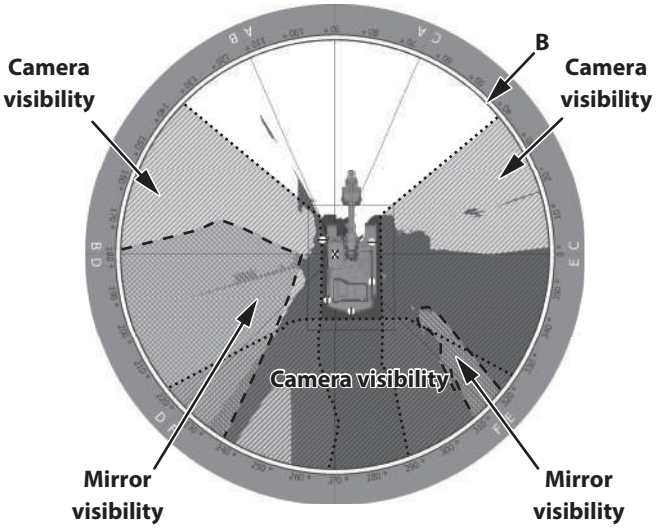

Visibility Map
"Surrounding Image + Image to Rear"

MDFY-VM-051-1 en_GB

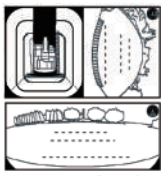

Monitor display
Surrounding Image + Image to Right Side + Image to Rear

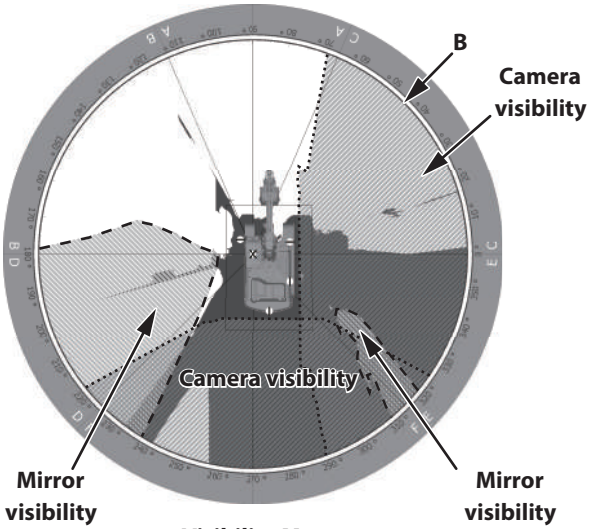

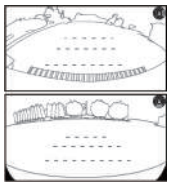

Monitor display
Image to Right Side + Image to Rear

Visibility Map
"Surrounding Image + Image to Right Side + Image to Rear"
"Image to Right Side + Image to Rear"

MDFY-VM-052-1 en_GB

Visibility Map for Machine Model ZX210LCN-7, ZX240N-7 with Monoblock Boom Personal Hazard

This machine complies with the essential health and safety requirements for visibility set out by Machinery Directive 2006/42/EC. The map shows the residual maskings (blind spots) observed by a seated operator (wearing the recommended seat restraint) in the cab using direct vision and the standard visual aids supplied with the machine. Additionally, operators are encouraged to adjust the mirrors provided to the machine to show the area as shown below.

This map shows an approximation of the residual masking. This can be used as a guide when conducting a site risk assessment, utilized for site management and to consider additional visual aids.

Conditions: Driver's visibility on 1mRB and VTC are evaluated under ISO 5006.

Test Height (on 1mRB):	1.2 m
(1mRB to VTC/on VTC):	Ground Level
Operator eye Height:	1.2 m from the cab floor
Machine Configuration:	Monoblock Boom
Machine Position:	Travel Position (For the detail position, see the image below)
Applicable visual aids:	1. standard mirror (s) 2. standard camera (s)

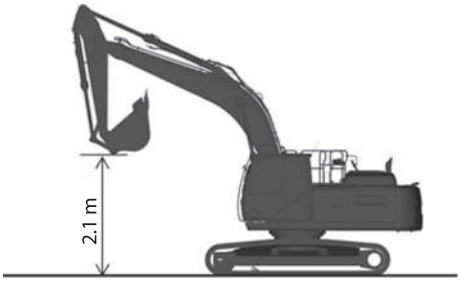

Machine Position Image

MDC1-VM-021 en_GB

⊗ : Operator's eye point
A : 1 m Rectangular Boundary (1mRB)
B : 12 m Visibility Test Circle (VTC)
⊖ : Standard Mirror (s)
⦶ : Standard camera (s)

: Masking area
: Mirror visibility
: Camera visibility

Monitor display
Surrounding Image

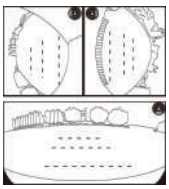

Monitor display
Image to Left Side + Image to Right Side + Image to Rear

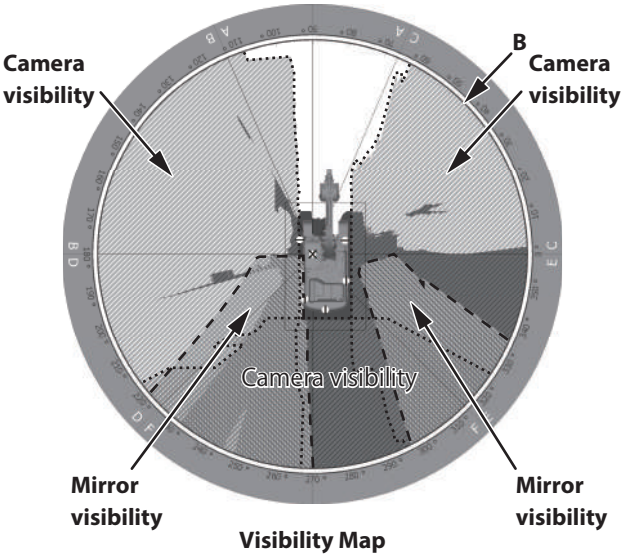

Visibility Map
"Surrounding Image" "Image to Left Side + Image to Right Side + Image to Rear"

MDFY-VM-053-1 en_GB

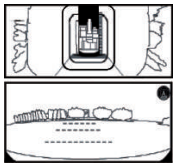

Monitor display
Surrounding Image + Image to Rear

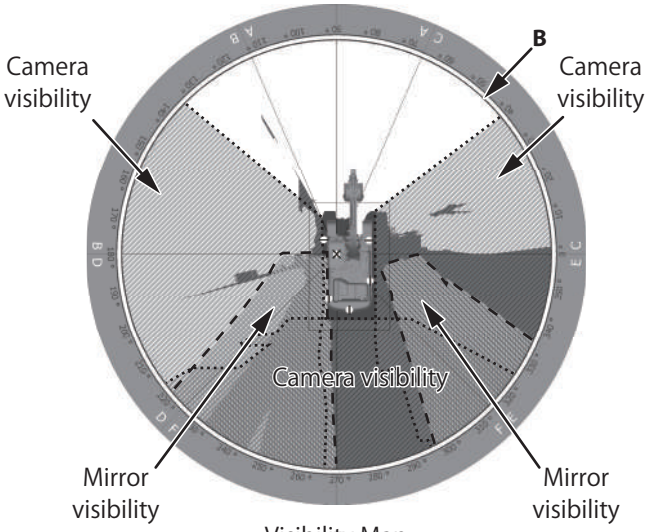

Visibility Map
"Surrounding Image + Image to Rear"

MDFY-VM-054-1 en_GB

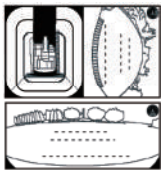

Monitor display
Surrounding Image + Image to Right Side + Image to Rear

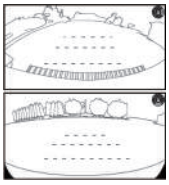

Monitor display
Image to Right Side + Image to Rear

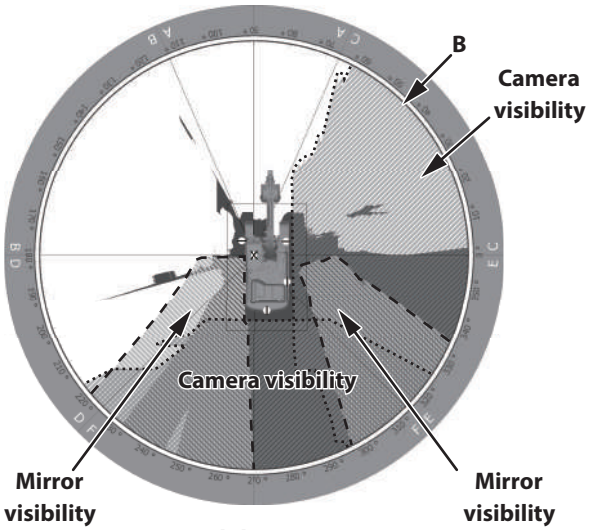

Visibility Map
"Surrounding Image + Image to Right Side + Image to Rear"
"Image to Right Side + Image to Rear"

MDFY-VM-055-1 en_GB

Visibility Map for Machine Model ZX210LCN-7, ZX240N-7 with 2-Piece Boom Personal Hazard

This machine complies with the essential health and safety requirements for visibility set out by Machinery Directive 2006/42/EC. The map shows the residual maskings (blind spots) observed by a seated operator (wearing the recommended seat restraint) in the cab using direct vision and the standard visual aids supplied with the machine. Additionally, operators are encouraged to adjust the mirrors provided to the machine to show the area as shown below.

This map shows an approximation of the residual masking. This can be used as a guide when conducting a site risk assessment, utilized for site management and to consider additional visual aids.

Conditions: Driver's visibility on 1mRB and VTC are evaluated under ISO 5006.

Test Height (on 1mRB):	1.2 m
(1mRB to VTC/on VTC):	Ground Level
Operator eye Height:	1.2 m from the cab floor
Machine Configuration:	2-Piece Boom
Machine Position:	Travel Position (For the detail position, see the image below)
Applicable visual aids:	1. standard mirror (s) 2. standard camera (s)

Machine Position Image

MDC1-VM-023 en_GB

⊗ : Operator's eye point
A : 1 m Rectangular Boundary (1mRB)
B : 12 m Visibility Test Circle (VTC)
⊖ : Standard Mirror (s)
⦶ : Standard camera (s)

: Masking area
: Mirror visibility
: Camera visibility

Monitor display
Surrounding Image

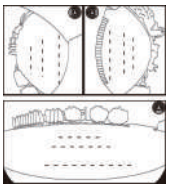

Monitor display
Image to Left Side + Image to Right Side + Image to Rear

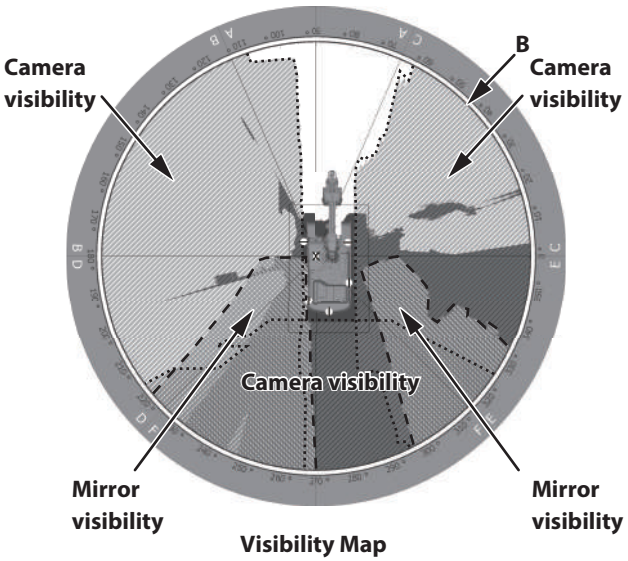

Visibility Map
"Surrounding Image" "Image to Left Side + Image to Right Side + Image to Rear"

MDFY-VM-056-1 en_GB

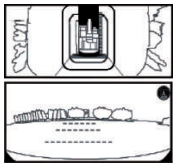

Monitor display
Surrounding Image + Image to Rear

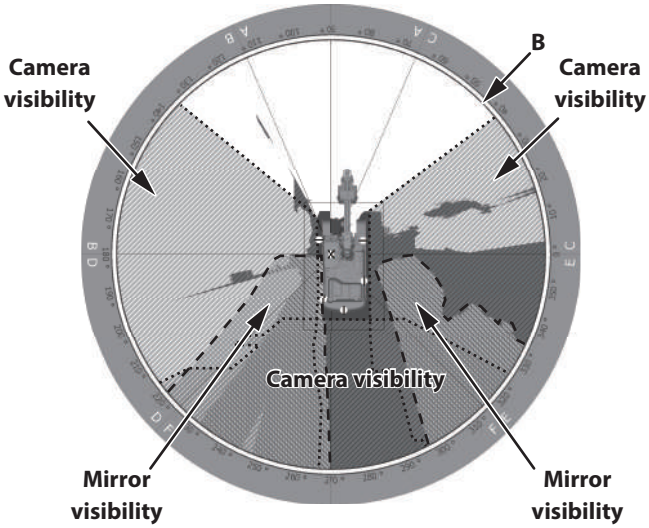

Visibility Map
"Surrounding Image + Image to Rear"

MDFY-VM-057-1 en_GB

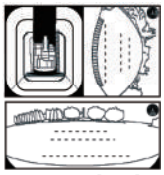

Monitor display
Surrounding Image + Image to Right Side + Image to Rear

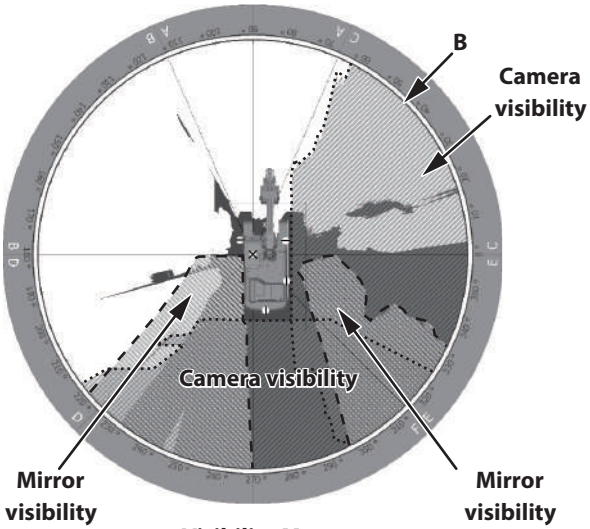

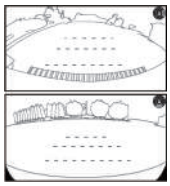

Monitor display
Image to Right Side + Image to Rear

Visibility Map
"Surrounding Image + Image to Right Side + Image to Rear"
"Image to Right Side + Image to Rear"

MDFY-VM-058-1 en_GB

Visibility Map for Machine Model ZX250LC-7, ZX250LCN-7 with Monoblock Boom Personal Hazard

This machine complies with the essential health and safety requirements for visibility set out by Machinery Directive 2006/42/EC. The map shows the residual maskings (blind spots) observed by a seated operator (wearing the recommended seat restraint) in the cab using direct vision and the standard visual aids supplied with the machine. Additionally, operators are encouraged to adjust the mirrors provided to the machine to show the area as shown below.

This map shows an approximation of the residual masking. This can be used as a guide when conducting a site risk assessment, utilized for site management and to consider additional visual aids.

Conditions: Driver's visibility on 1mRB and VTC are evaluated under ISO 5006.

Test Height (on 1mRB):	1.2 m
(1mRB to VTC/on VTC):	Ground Level
Operator eye Height:	1.2 m from the cab floor
Machine Configuration:	Monoblock Boom
Machine Position:	Travel Position (For the detail position, see the image below)
Applicable visual aids:	1. standard mirror (s)
	2. standard camera (s)

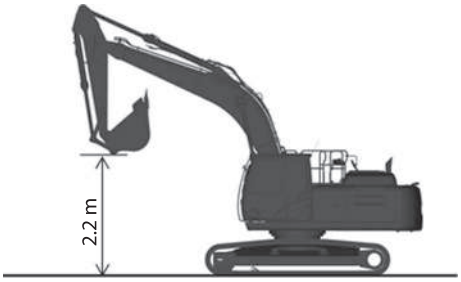

Machine Position Image

MDFY-VM-079 en_GB

⊗ : Operator's eye point
A : 1 m Rectangular Boundary (1mRB)
B : 12 m Visibility Test Circle (VTC)
⊖ : Standard Mirror (s)
⦶ : Standard camera (s)

: Masking area
: Mirror visibility
: Camera visibility

Monitor display
Surrounding Image

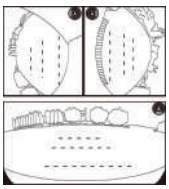

Monitor display
Image to Left Side + Image to Right Side + Image to Rear

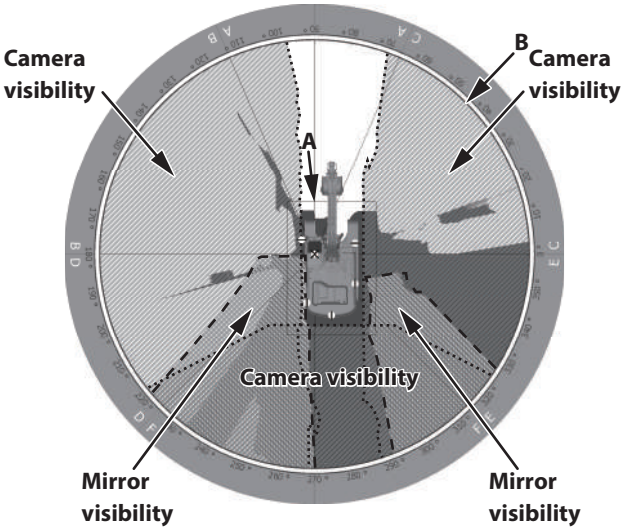

Visibility Map
"Surrounding Image" "Image to Left Side + Image to Right Side + Image to Rear"

MDFY-VM-016-1 en_GB

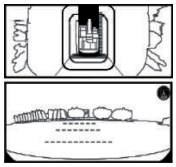

Monitor display
Surrounding Image + Image to Rear

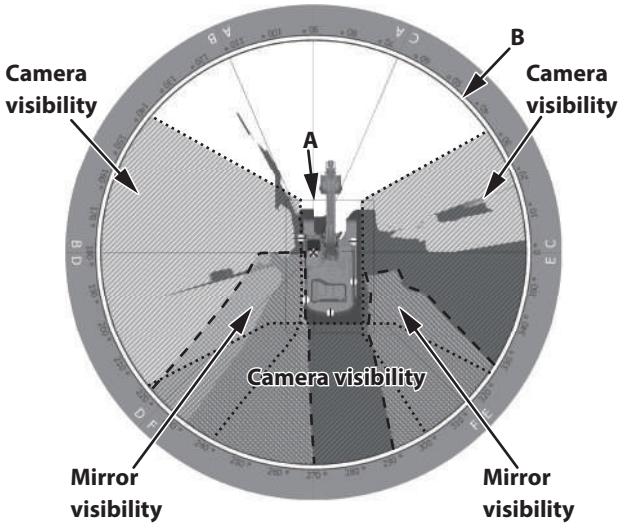

Visibility Map
"Surrounding Image + Image to Rear"

MDFY-VM-017-1 en_GB

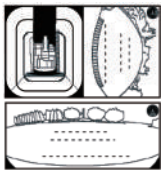

Monitor display
Surrounding Image + Image to Right Side
+ Image to Rear

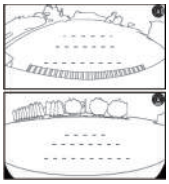

Monitor display
Image to Right Side + Image to Rear

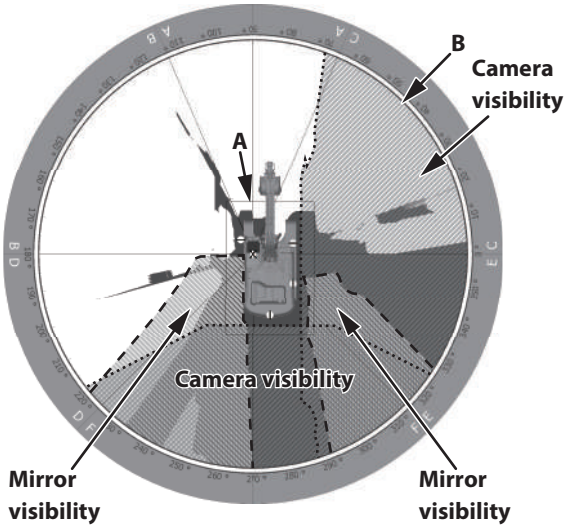

Visibility Map
"Surrounding Image + Image to Right Side + Image to Rear"
"Image to Right Side + Image to Rear"

MDFY-VM-018-1 en_GB

Visibility Map for Machine Model ZX250LC-7, ZX250LCN-7 with 2-Piece Boom Personal Hazard

This machine complies with the essential health and safety requirements for visibility set out by Machinery Directive 2006/42/EC. The map shows the residual maskings (blind spots) observed by a seated operator (wearing the recommended seat restraint) in the cab using direct vision and the standard visual aids supplied with the machine. Additionally, operators are encouraged to adjust the mirrors provided to the machine to show the area as shown below.

This map shows an approximation of the residual masking. This can be used as a guide when conducting a site risk assessment, utilized for site management and to consider additional visual aids.

Conditions: Driver's visibility on 1mRB and VTC are evaluated under ISO 5006.

Test Height (on 1mRB):	1.2 m
(1mRB to VTC/on VTC):	Ground Level
Operator eye Height:	1.2 m from the cab floor
Machine Configuration:	2-Piece Boom
Machine Position:	Travel Position (For the detail position, see the image below)
Applicable visual aids:	1. standard mirror (s) 2. standard camera (s)

Machine Position Image

MDFY-VM-080 en_GB

⊗ : Operator's eye point
A : 1 m Rectangular Boundary (1mRB)
B : 12 m Visibility Test Circle (VTC)
⊖ : Standard Mirror (s)
⦶ : Standard camera (s)

: Masking area
: Mirror visibility
: Camera visibility

Monitor display
Surrounding Image

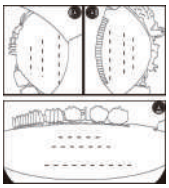

Monitor display
Image to Left Side + Image to Right Side + Image to Rear

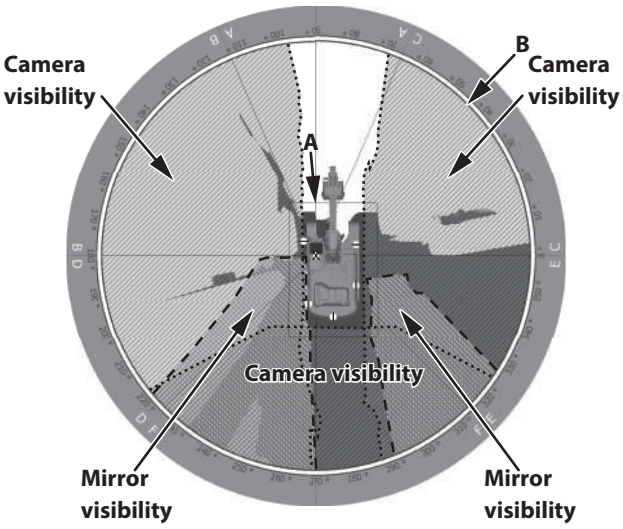

Visibility Map
"Surrounding Image" "Image to Left Side + Image to Right Side + Image to Rear"

MDFY-VM-013-1 en_GB

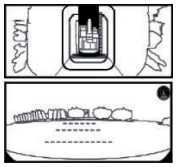

Monitor display
Surrounding Image + Image to Rear

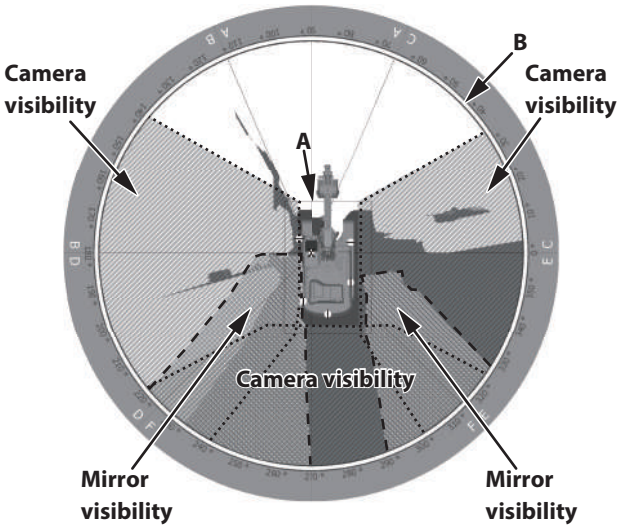

Visibility Map
"Surrounding Image + Image to Rear"

MDFY-VM-014-1 en_GB

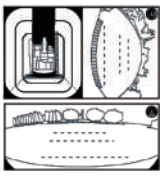

Monitor display
Surrounding Image + Image to Right Side + Image to Rear

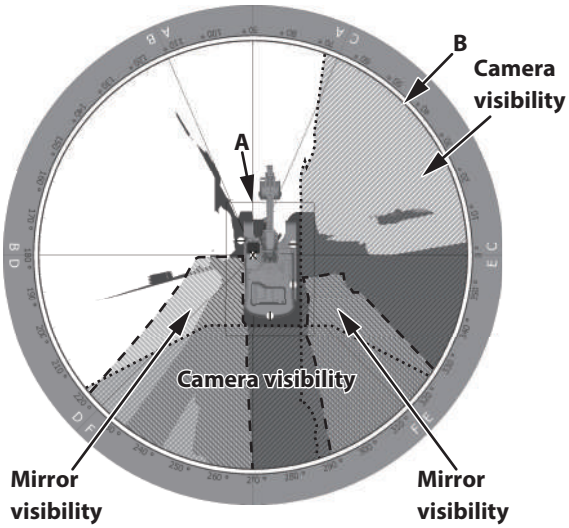

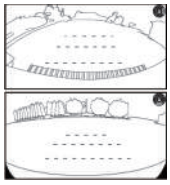

Monitor display
Image to Right Side + Image to Rear

Visibility Map
"Surrounding Image + Image to Right Side + Image to Rear"
"Image to Right Side + Image to Rear"

MDFY-VM-015-1 en_GB

Visibility Map for Machine Model ZX300LC-7, ZX300LCN-7 with Monoblock Boom Personal Hazard

This machine complies with the essential health and safety requirements for visibility set out by Machinery Directive 2006/42/EC. The map shows the residual maskings (blind spots) observed by a seated operator (wearing the recommended seat restraint) in the cab using direct vision and the standard visual aids supplied with the machine. Additionally, operators are encouraged to adjust the mirrors provided to the machine to show the area as shown below.

This map shows an approximation of the residual masking. This can be used as a guide when conducting a site risk assessment, utilized for site management and to consider additional visual aids.

Conditions: Driver's visibility on 1mRB and VTC are evaluated under ISO 5006.

Test Height (on 1mRB):	1.2 m
(1mRB to VTC/on VTC):	Ground Level
Operator eye Height:	1.2 m from the cab floor
Machine Configuration:	Monoblock Boom
Machine Position:	Travel Position (For the detail position, see the image below)
Applicable visual aids:	1. standard mirror (s) 2. standard camera (s)

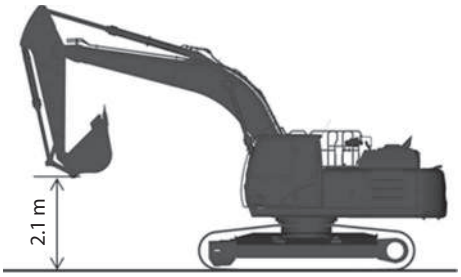

Machine Position Image

⊗ : Operator's eye point
A : 1 m Rectangular Boundary (1mRB)
B : 12 m Visibility Test Circle (VTC)
⊖ : Standard Mirror (s)
⦶ : Standard camera (s)

: Masking area
: Mirror visibility
: Camera visibility

MDC1-VM-025 ja

Monitor display
Surrounding Image

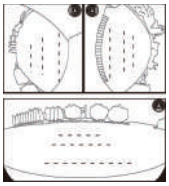

Monitor display
Image to Left Side + Image to Right Side + Image to Rear

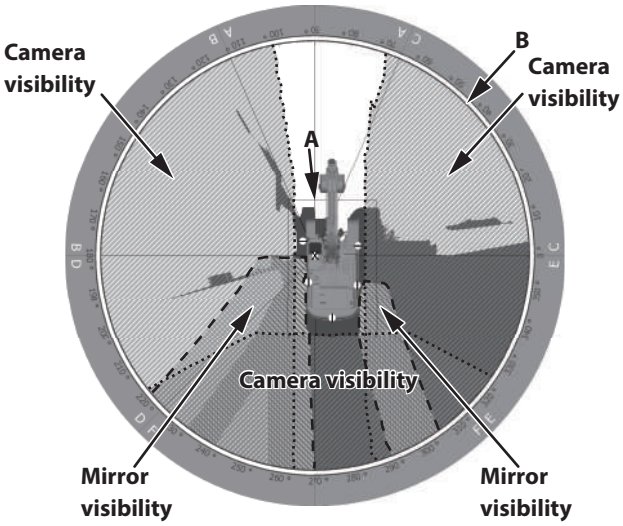

Visibility Map
"Surrounding Image" "Image to Left Side + Image to Right Side + Image to Rear"

MDFY-VM-004-1 en_GB

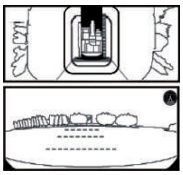

Monitor display
Surrounding Image + Image to Rear

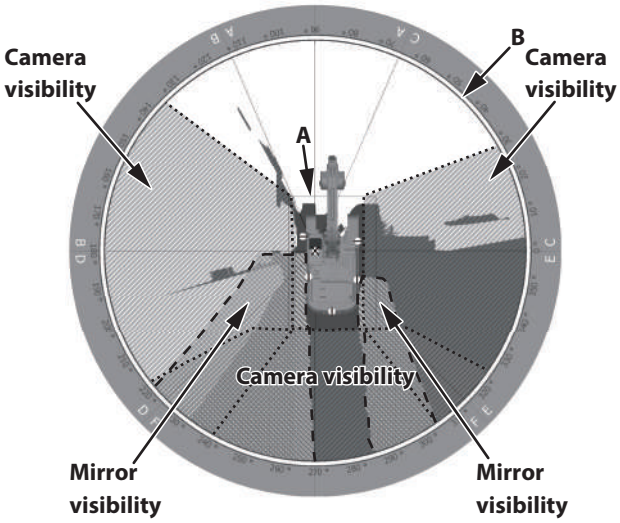

Visibility Map
"Surrounding Image + Image to Rear"

MDFY-VM-005-1 en_GB

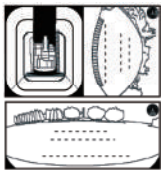

Monitor display
Surrounding Image + Image to Right Side + Image to Rear

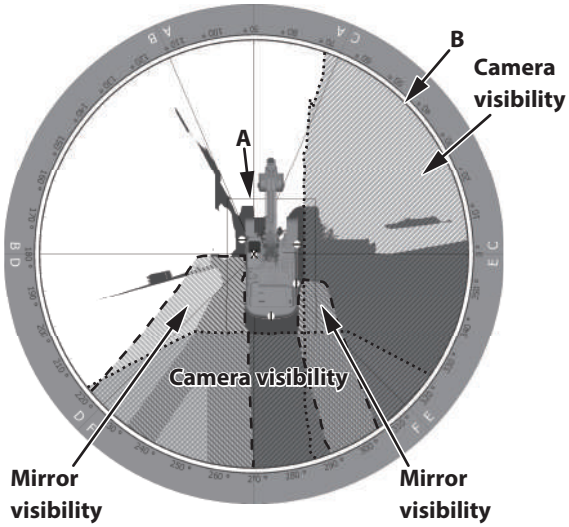

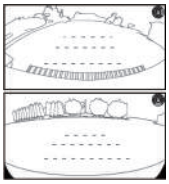

Monitor display
Image to Right Side + Image to Rear

Visibility Map
"Surrounding Image + Image to Right Side + Image to Rear"
"Image to Right Side + Image to Rear"

MDFY-VM-006-1 en_GB

Visibility Map for Machine Model ZX300LC-7, ZX300LCN-7 with 2-Piece Boom Personal Hazard

This machine complies with the essential health and safety requirements for visibility set out by Machinery Directive 2006/42/EC. The map shows the residual maskings (blind spots) observed by a seated operator (wearing the recommended seat restraint) in the cab using direct vision and the standard visual aids supplied with the machine. Additionally, operators are encouraged to adjust the mirrors provided to the machine to show the area as shown below.

This map shows an approximation of the residual masking. This can be used as a guide when conducting a site risk assessment, utilized for site management and to consider additional visual aids.

Conditions: Driver's visibility on 1mRB and VTC are evaluated under ISO 5006.

Test Height (on 1mRB):	1.2 m
(1mRB to VTC/on VTC):	Ground Level
Operator eye Height:	1.2 m from the cab floor
Machine Configuration:	2-Piece Boom
Machine Position:	Travel Position (For the detail position, see the image below)
Applicable visual aids:	1. standard mirror (s) 2. standard camera (s)

Machine Position Image

⊗ : Operator's eye point
A : 1 m Rectangular Boundary (1mRB)
B : 12 m Visibility Test Circle (VTC)
⊖ : Standard Mirror (s)
⦶ : Standard camera (s)

: Masking area
: Mirror visibility
: Camera visibility

MDC1-VM-027 ja

Monitor display
Surrounding Image

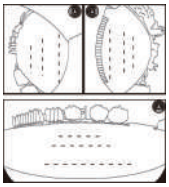

Monitor display
Image to Left Side + Image to Right Side + Image to Rear

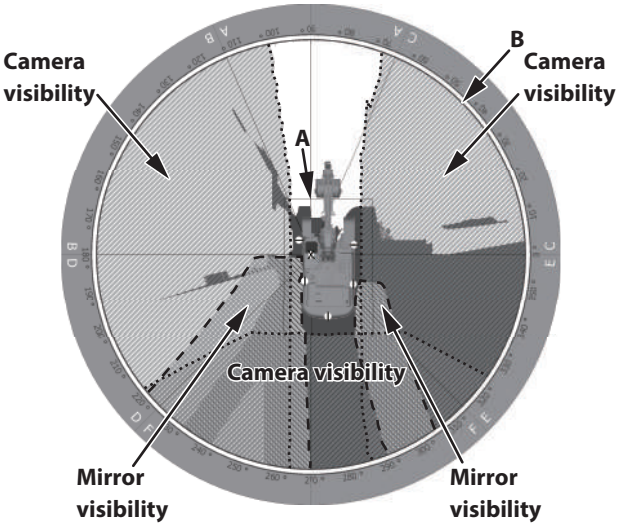

Visibility Map
"Surrounding Image" "Image to Left Side + Image to Right Side + Image to Rear"

MDFY-VM-001-1 en_GB

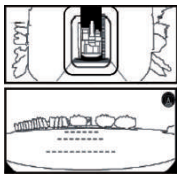

Monitor display
Surrounding Image + Image to Rear

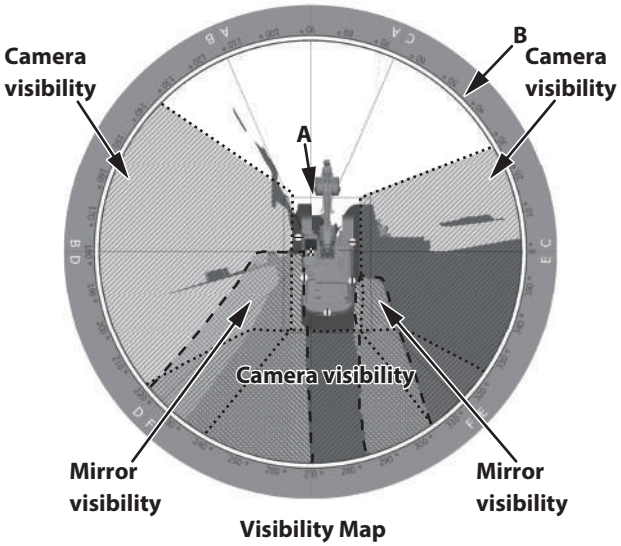

Visibility Map
"Surrounding Image + Image to Rear"

MDFY-VM-002-1 en_GB

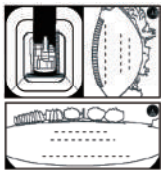

Monitor display
Surrounding Image + Image to Right Side + Image to Rear

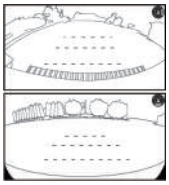

Monitor display
Image to Right Side + Image to Rear

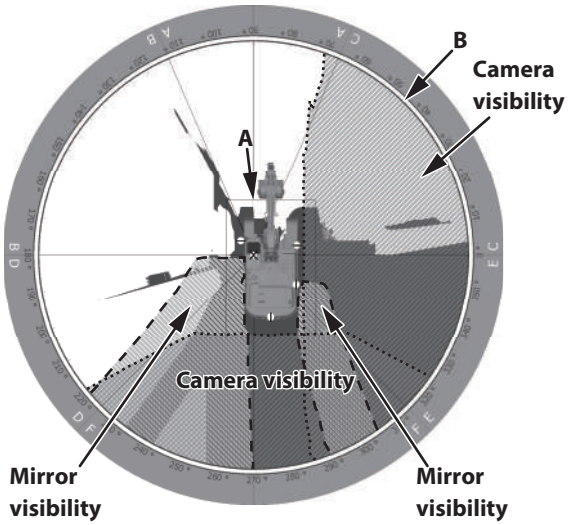

Visibility Map
"Surrounding Image + Image to Right Side + Image to Rear"
"Image to Right Side + Image to Rear"

MDFY-VM-003-1 en_GB

Visibility Map for Machine Model ZX350LC-7, ZX350LCN-7 with Monoblock Boom Personal Hazard

This machine complies with the essential health and safety requirements for visibility set out by Machinery Directive 2006/42/EC. The map shows the residual maskings (blind spots) observed by a seated operator (wearing the recommended seat restraint) in the cab using direct vision and the standard visual aids supplied with the machine. Additionally, operators are encouraged to adjust the mirrors provided to the machine to show the area as shown below.

This map shows an approximation of the residual masking. This can be used as a guide when conducting a site risk assessment, utilized for site management and to consider additional visual aids.

Conditions: Driver's visibility on 1mRB and VTC are evaluated under ISO 5006.

Test Height (on 1mRB):	1.2 m
(1mRB to VTC/on VTC):	Ground Level
Operator eye Height:	1.2 m from the cab floor
Machine Configuration:	Monoblock Boom
Machine Position:	Travel Position (For the detail position, see the image below)
Applicable visual aids:	1. standard mirror (s) 2. standard camera (s)

Machine Position Image

⊗ : Operator's eye point
A : 1 m Rectangular Boundary (1mRB)
B : 12 m Visibility Test Circle (VTC)
⊖ : Standard Mirror (s)
⦶ : Standard camera (s)

: Masking area
: Mirror visibility
: Camera visibility

MDC1-VM-029 ja

Monitor display
Surrounding Image

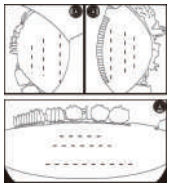

Monitor display
Image to Left Side + Image to Right Side + Image to Rear

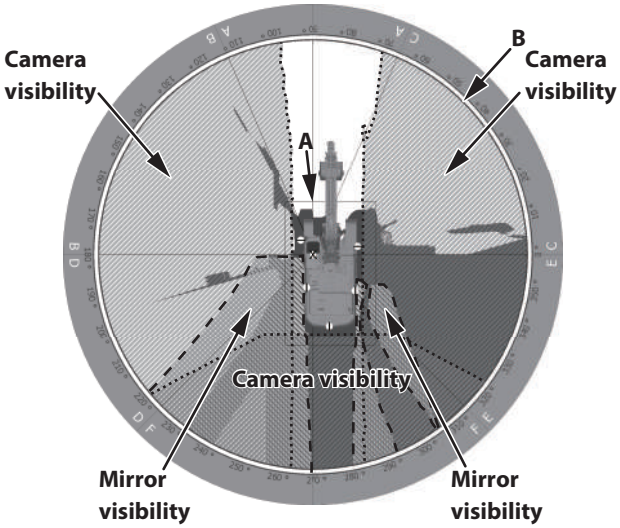

Visibility Map
"Surrounding Image" "Image to Left Side + Image to Right Side + Image to Rear"

MDFY-VM-010-1 en_GB

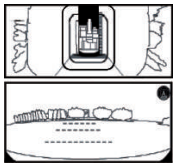

Monitor display
Surrounding Image + Image to Rear

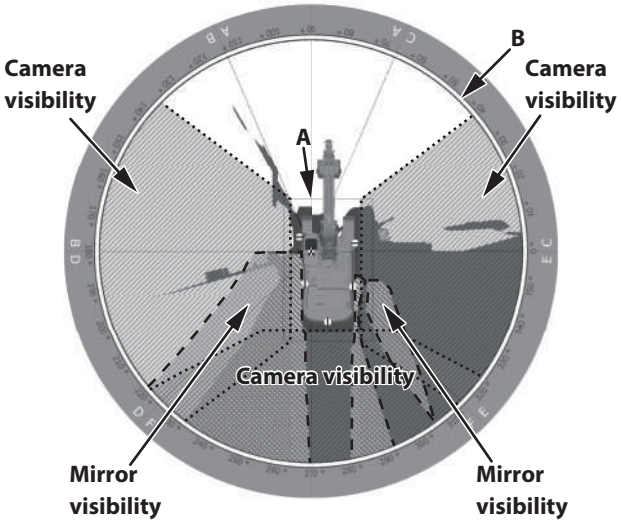

Visibility Map
"Surrounding Image + Image to Rear"

MDFY-VM-011-1 en_GB

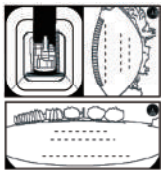

Monitor display
Surrounding Image + Image to Right Side + Image to Rear

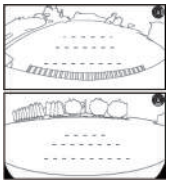

Monitor display
Image to Right Side + Image to Rear

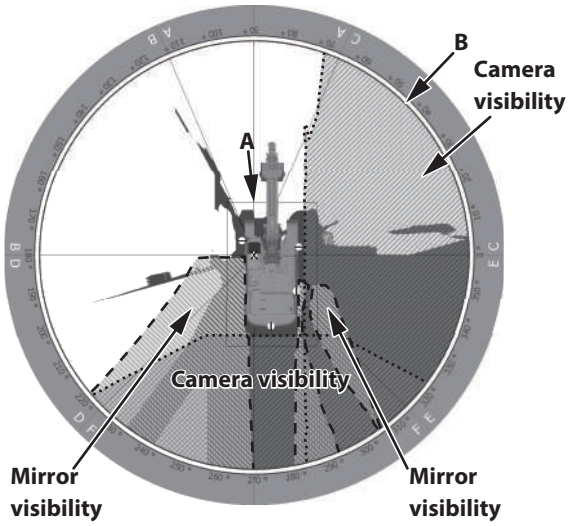

Visibility Map
"Surrounding Image + Image to Right Side + Image to Rear"
"Image to Right Side + Image to Rear"

MDFY-VM-012-1 en_GB

Visibility Map for Machine Model ZX350LC-7, ZX350LCN-7 with 2-Piece Boom Personal Hazard

This machine complies with the essential health and safety requirements for visibility set out by Machinery Directive 2006/42/EC. The map shows the residual maskings (blind spots) observed by a seated operator (wearing the recommended seat restraint) in the cab using direct vision and the standard visual aids supplied with the machine. Additionally, operators are encouraged to adjust the mirrors provided to the machine to show the area as shown below.

This map shows an approximation of the residual masking. This can be used as a guide when conducting a site risk assessment, utilized for site management and to consider additional visual aids.

Conditions: Driver's visibility on 1mRB and VTC are evaluated under ISO 5006.

Test Height (on 1mRB):	1.2 m
(1mRB to VTC/on VTC):	Ground Level
Operator eye Height:	1.2 m from the cab floor
Machine Configuration:	2-Piece Boom
Machine Position:	Travel Position (For the detail position, see the image below)
Applicable visual aids:	1. standard mirror (s) 2. standard camera (s)

Machine Position Image

⊗ : Operator's eye point
A : 1 m Rectangular Boundary (1mRB)
B : 12 m Visibility Test Circle (VTC)
⊖ : Standard Mirror (s)
⦶ : Standard Camera (s)

: Masking area
: Mirror visibility
: Camera visibility

MDC1-VM-031 ja

Monitor display
Surrounding Image

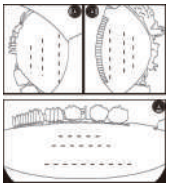

Monitor display
Image to Left Side + Image to Right Side + Image to Rear

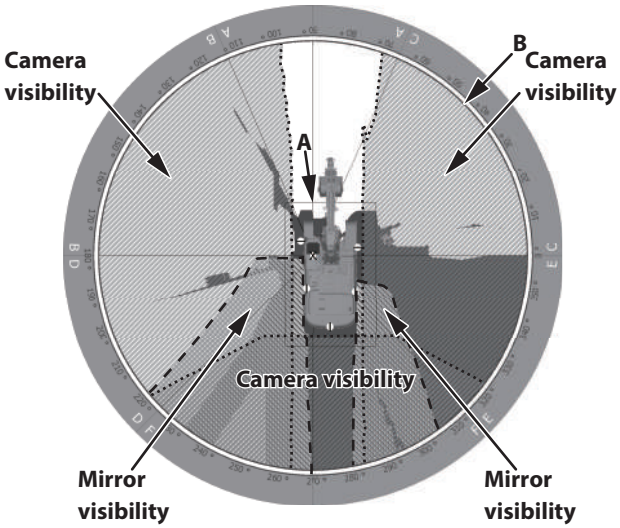

Visibility Map
"Surrounding Image" "Image to Left Side + Image to Right Side + Image to Rear"

MDFY-VM-007-1 en_GB

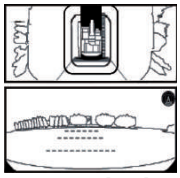

Monitor display
Surrounding Image + Image to Rear

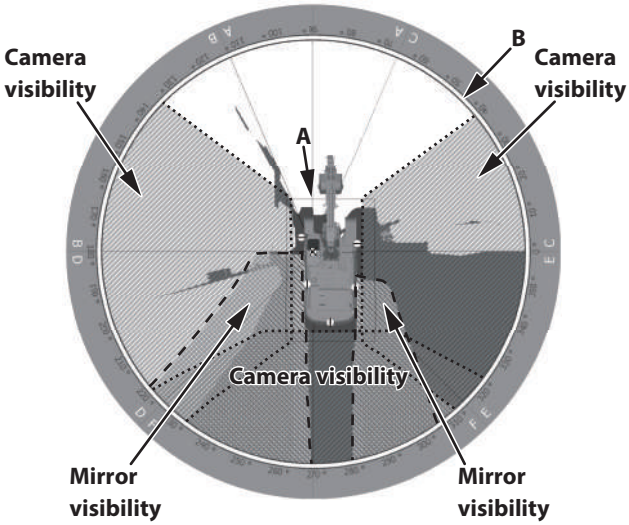

Visibility Map
"Surrounding Image + Image to Rear"

MDFY-VM-008-1 en_GB

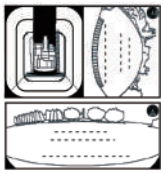

Monitor display
Surrounding Image + Image to Right Side + Image to Rear

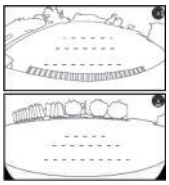

Monitor display
Image to Right Side + Image to Rear

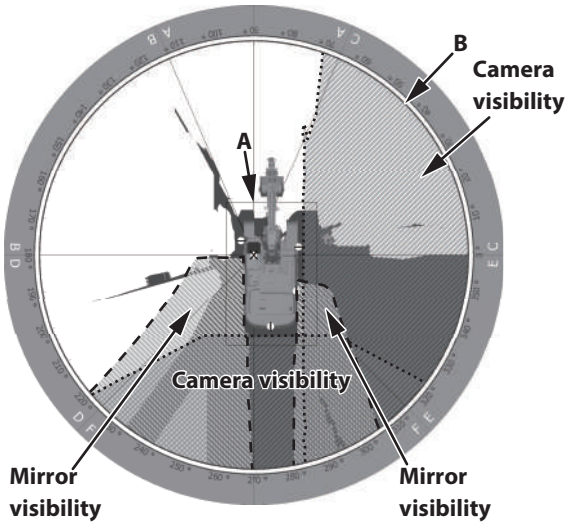

Visibility Map
"Surrounding Image + Image to Right Side + Image to Rear"
"Image to Right Side + Image to Rear"

MDFY-VM-009-1 en_GB

Aerial Angle (Surround View) Visibility Map for ZX120-7 class

This map shows the area where a person 1.6m tall is displayed on the monitor screen in a recognizable size, minimal 7.0mm according to ISO 16001. This map can be used as a guide when conducting a site risk assessment.

Note: local circumstances, contrast between colours, light intensity etc. may affect Visibility performance.

Area where a person is recognizably displayed on the monitor

⊗ : measurement center point

● : location where 1.6m person shown as minimal 7mm on the monitor

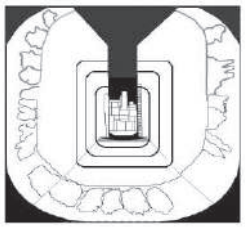

Monitor display

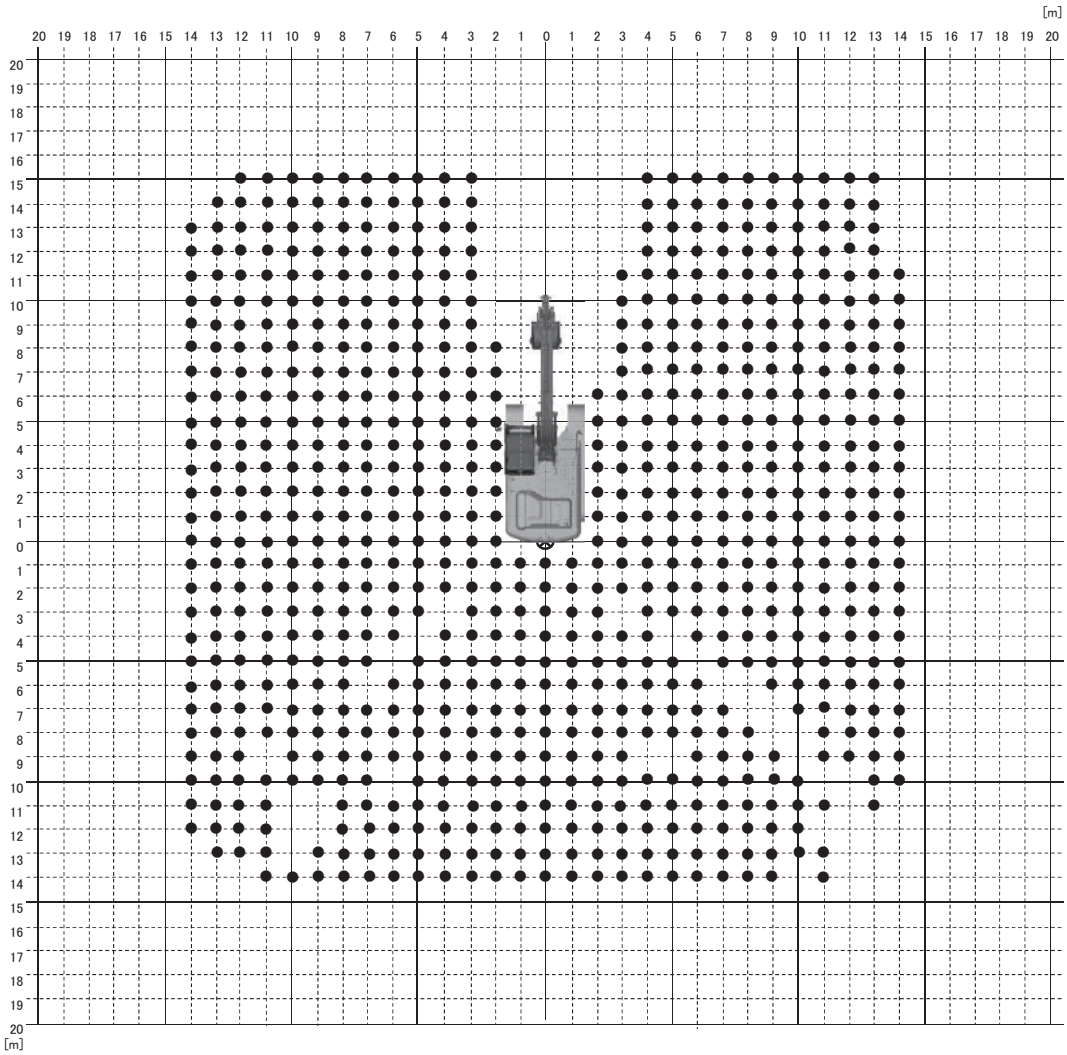

Aerial Angle visibility map
"Surrounding Image"

MDFY-VM-063 en_GB

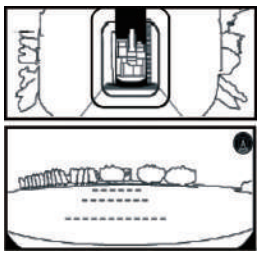

Monitor display

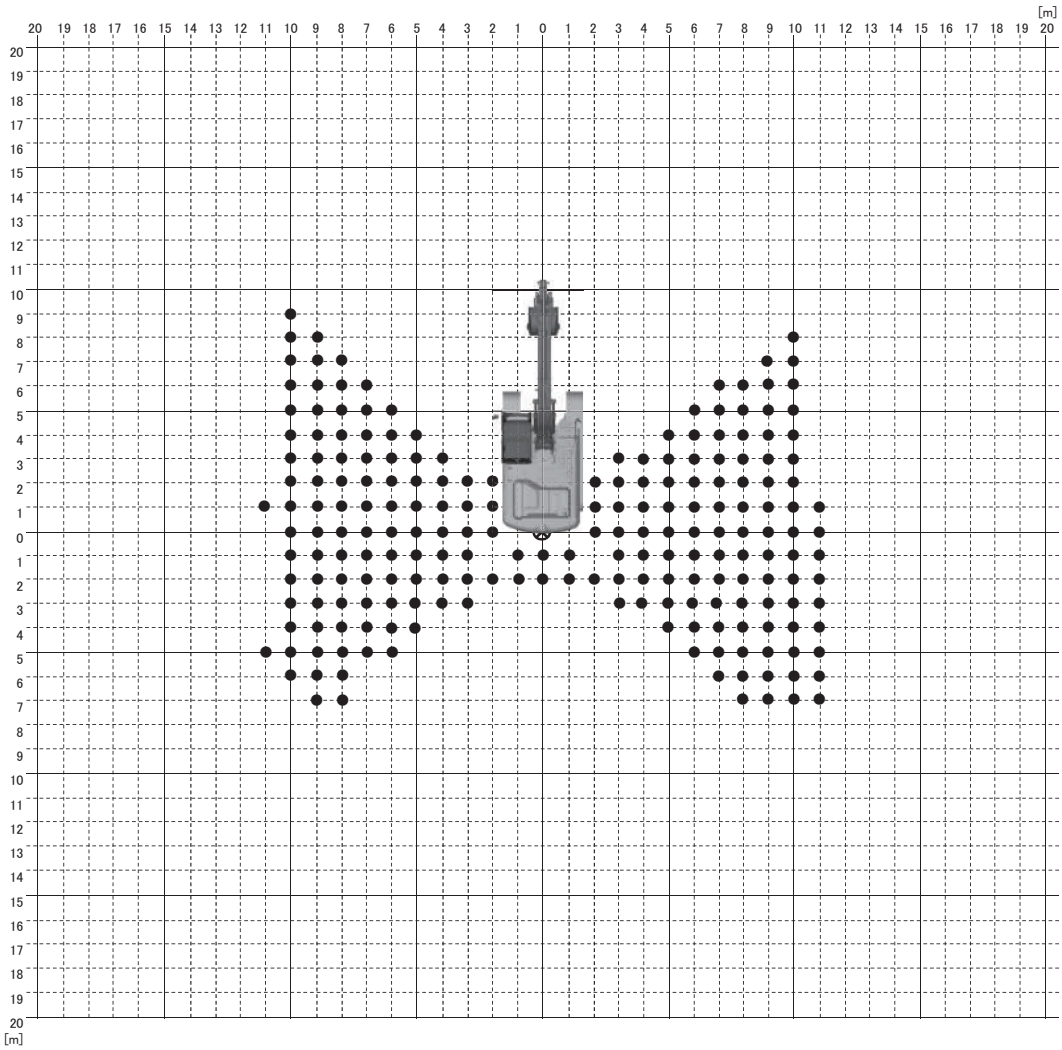

Aerial Angle visibility map
"Surrounding Image + Image to Rear"

MDFY-VM-064 en_GB

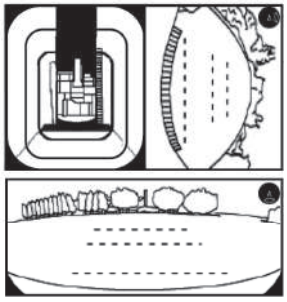

Monitor display

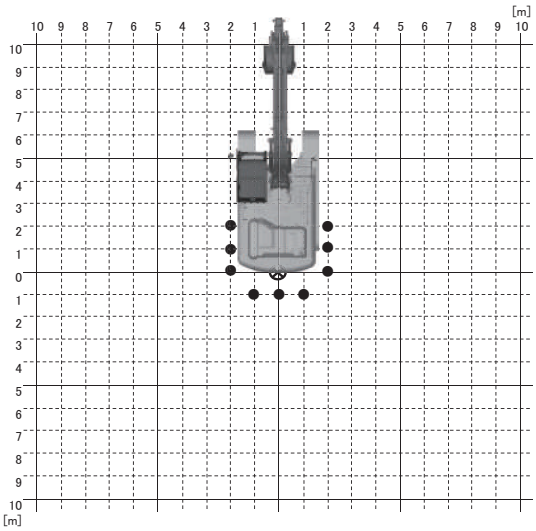

Aerial Angle visibility map
"Surrounding Image + Image to Right Side + Image to Rear"

MDFY-VM-065 en_GB

Aerial Angle (Surround View) Visibility Map for ZX160-7, 180-7 class

This map shows the area where a person 1.6m tall is displayed on the monitor screen in a recognizable size, minimal 7.0mm according to ISO 16001. This map can be used as a guide when conducting a site risk assessment.

Note: local circumstances, contrast between colours, light intensity etc. may affect Visibility performance.

Area where a person is recognizably displayed on the monitor

⊗ : measurement center point

● : location where 1.6m person shown as minimal 7mm on the monitor

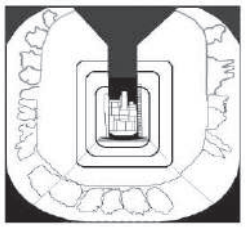

Monitor display

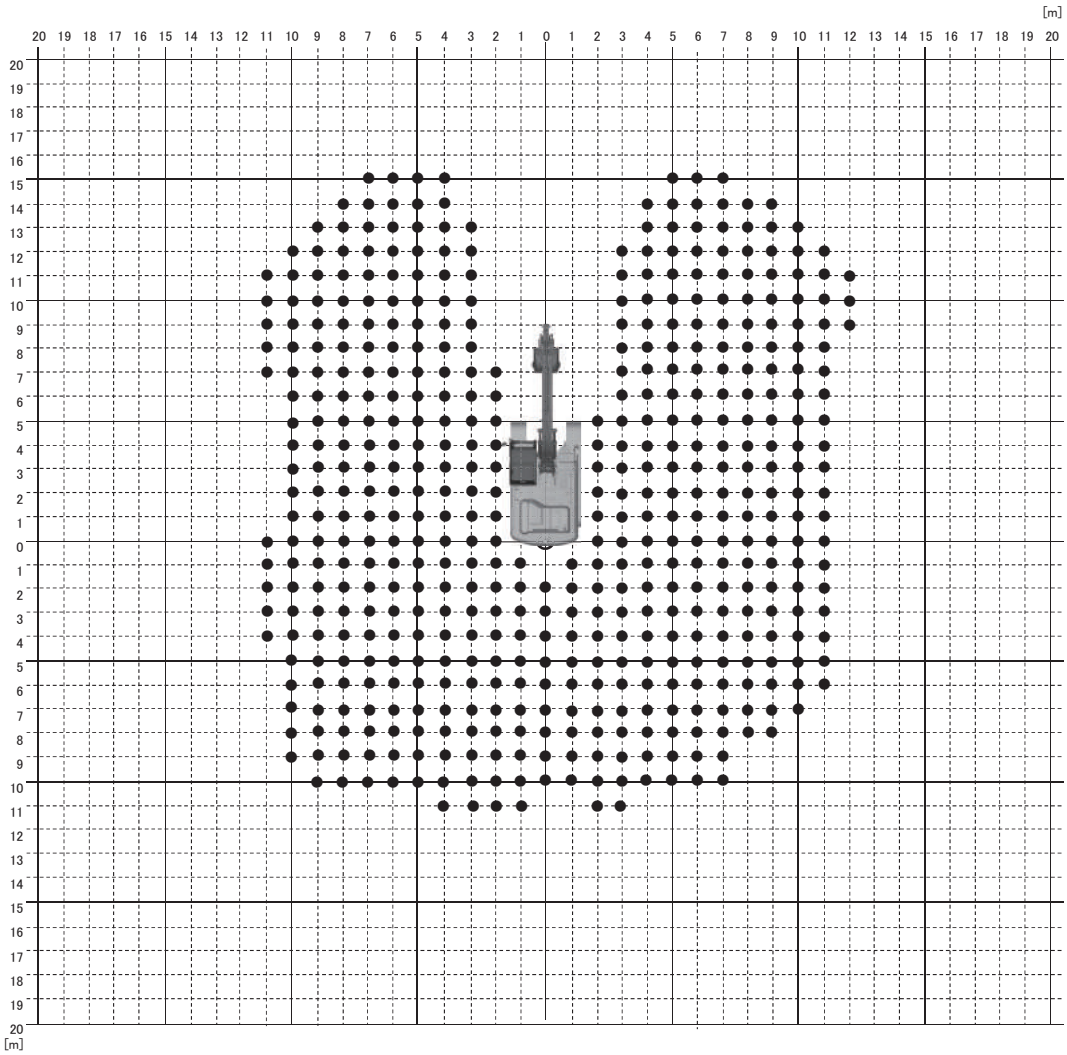

Aerial Angle visibility map
"Surrounding Image"

MDFY-VM-066 en_GB

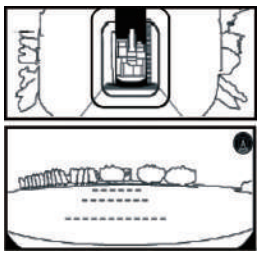

Monitor display

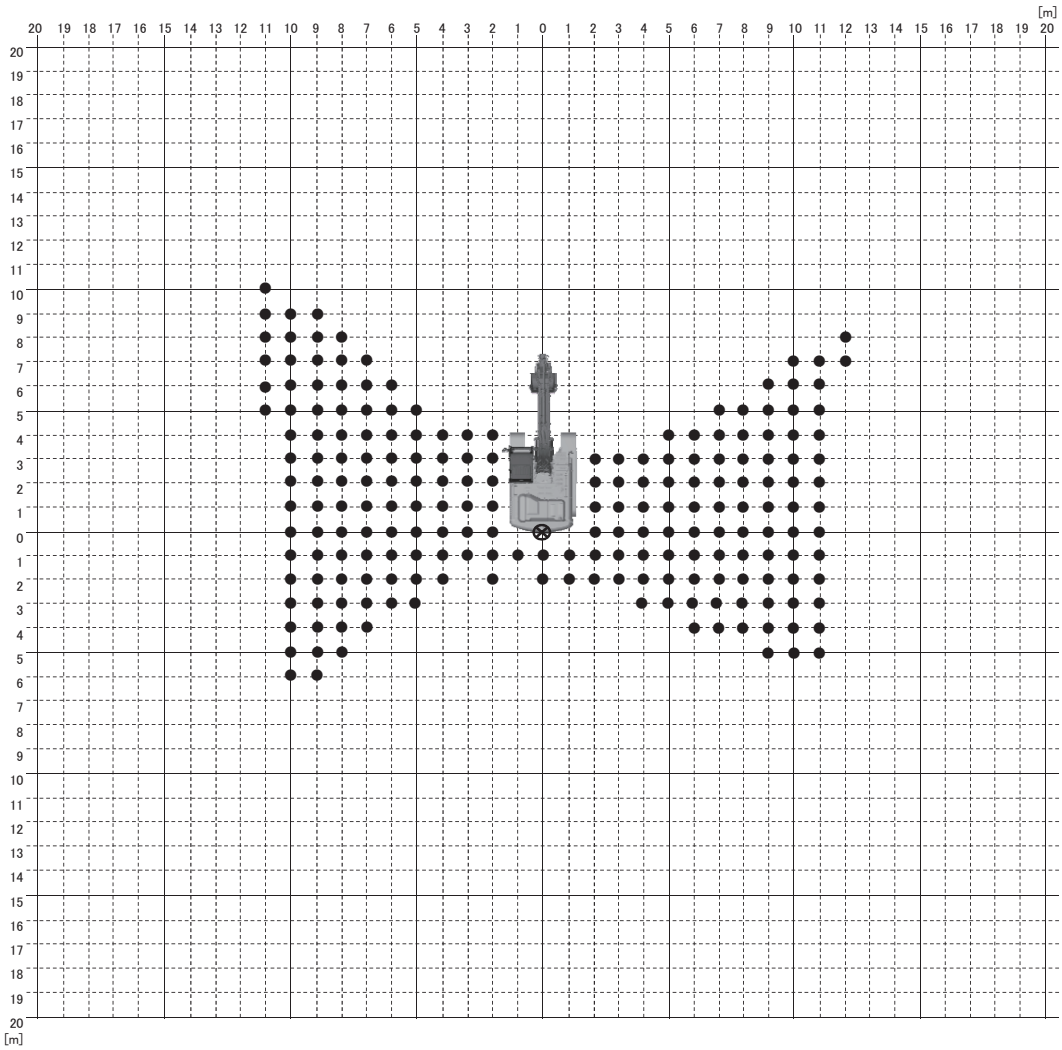

Aerial Angle visibility map
"Surrounding Image + Image to Rear"

MDFY-VM-067 en_GB

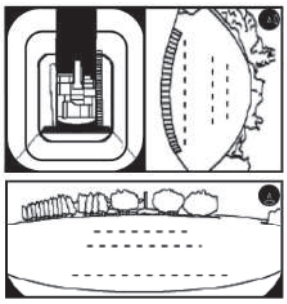

Monitor display

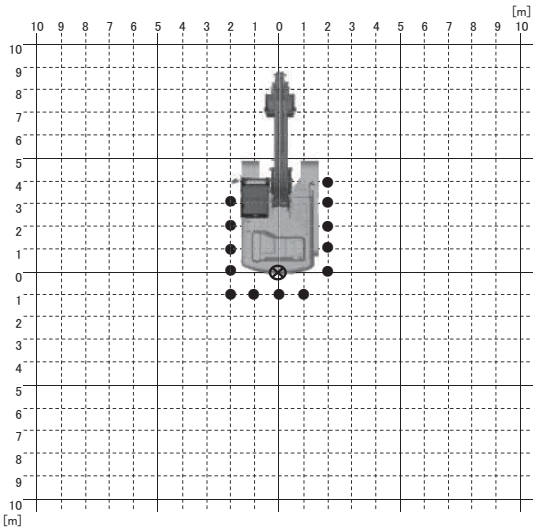

Aerial Angle visibility map
"Surrounding Image + Image to Right Side + Image to Rear"

MDFY-VM-068 en_GB

Aerial Angle (Surround View) Visibility Map for ZX210LC-7

This map shows the area where a person 1.6m tall is displayed on the monitor screen in a recognizable size, minimal 7.0mm according to ISO 16001. This map can be used as a guide when conducting a site risk assessment.

Note: local circumstances, contrast between colours, light intensity etc. may affect Visibility performance.

Area where a person is recognizably displayed on the monitor

⊗ : measurement center point

● : location where 1.6m person shown as minimal 7mm on the monitor

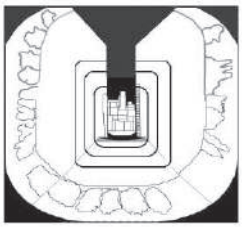

Monitor display

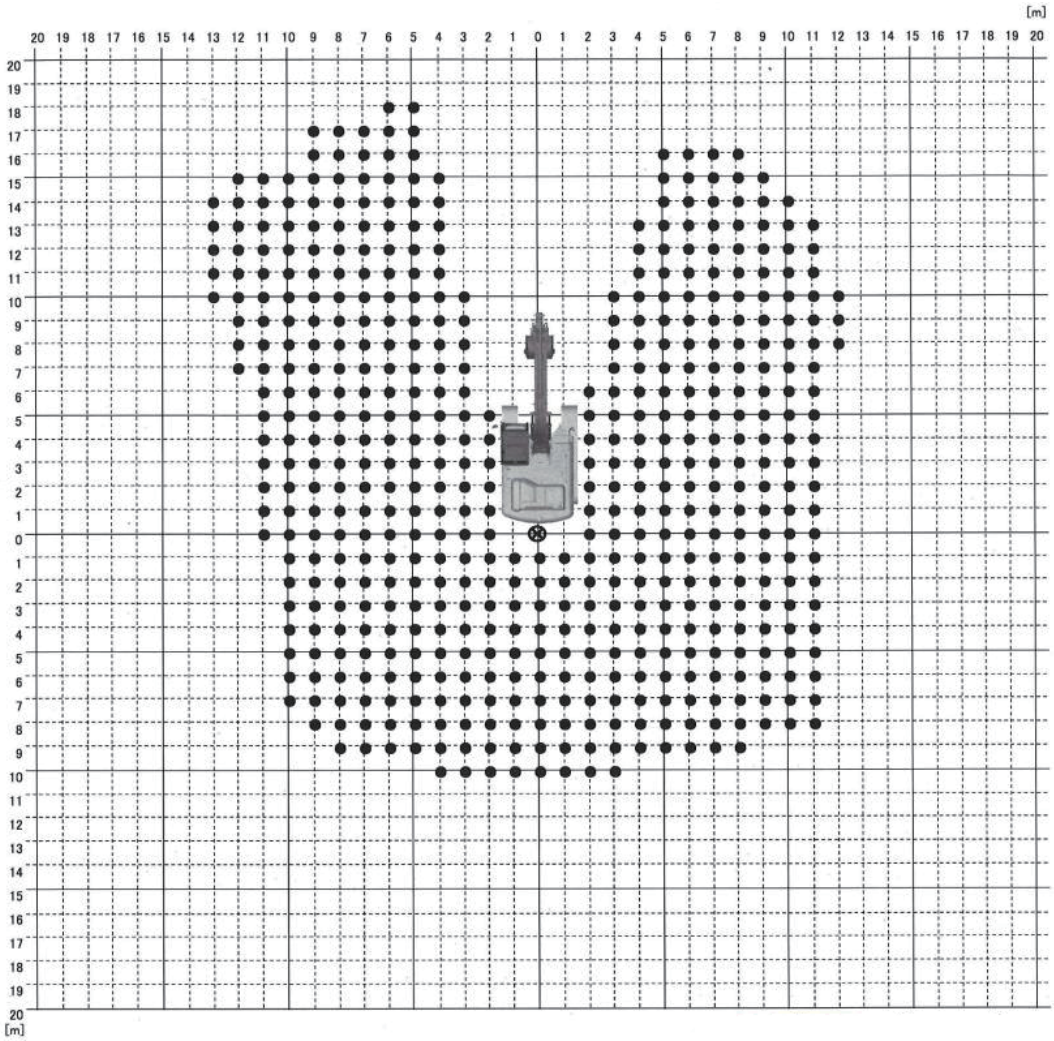

Aerial Angle visibility map
"Surrounding Image"

MDFY-VM-069 en_GB

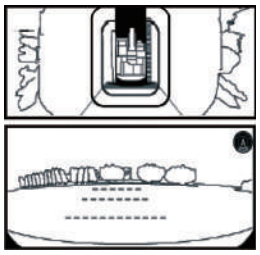

Monitor display

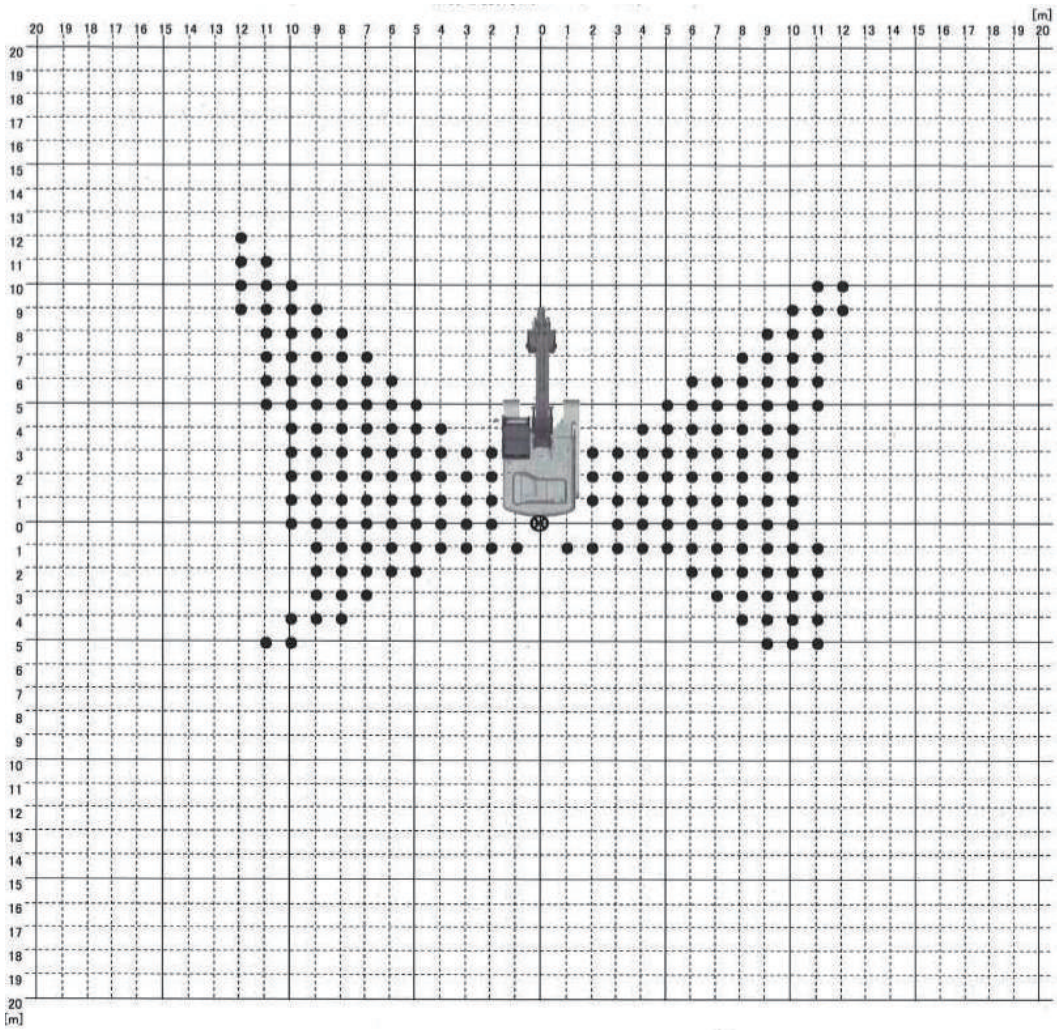

Aerial Angle visibility map
"Surrounding Image + Image to Rear"

MDFY-VM-070 en_GB

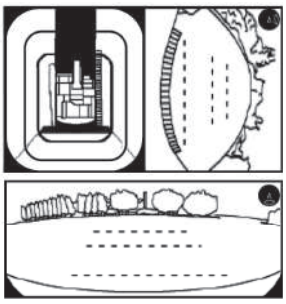

Monitor display

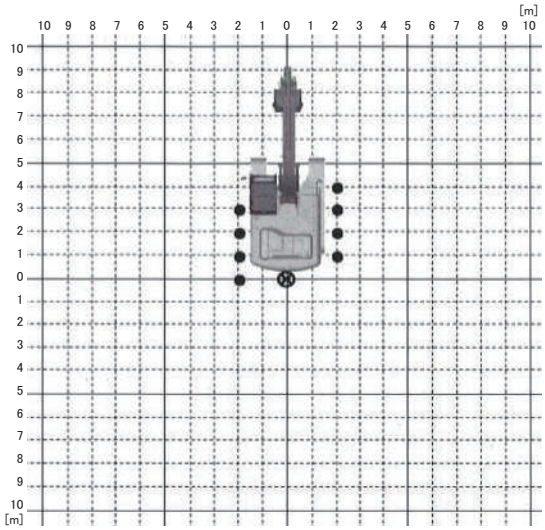

Aerial Angle visibility map
"Surrounding Image + Image to Right Side + Image to Rear"

MDFY-VM-071 en_GB

Aerial Angle (Surround View) Visibility Map for ZX210LCN-7, ZX240N-7

This map shows the area where a person 1.6m tall is displayed on the monitor screen in a recognizable size, minimal 7.0mm according to ISO 16001. This map can be used as a guide when conducting a site risk assessment.

Note: local circumstances, contrast between colours, light intensity etc. may affect Visibility performance.

Area where a person is recognizably displayed on the monitor

⊗ : measurement center point

● : location where 1.6m person shown as minimal 7mm on the monitor

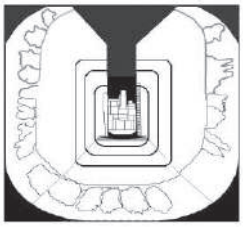

Monitor display

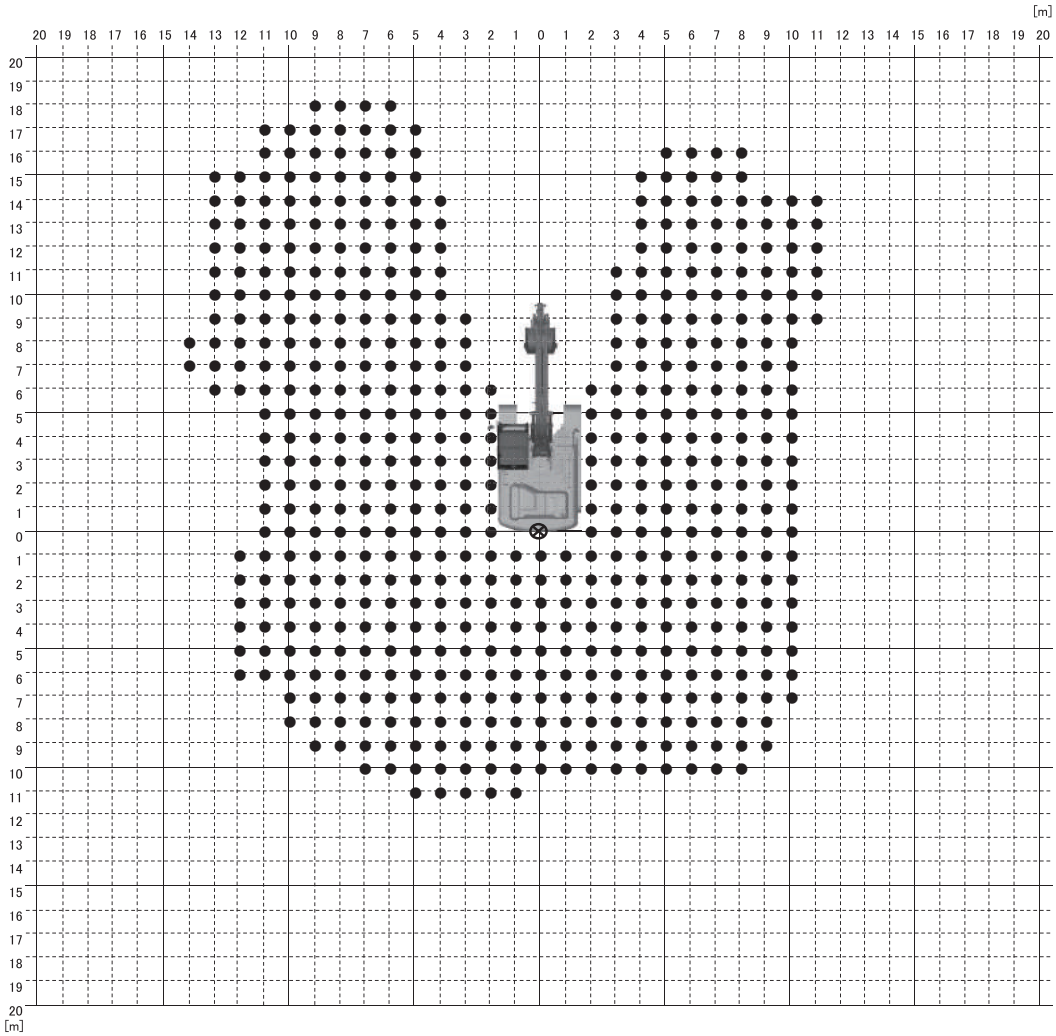

Aerial Angle visibility map
"Surrounding Image"

MDFY-VM-072 en_GB

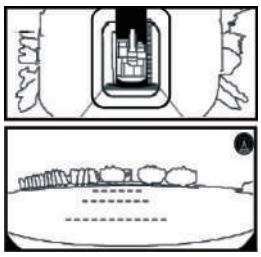

Monitor display

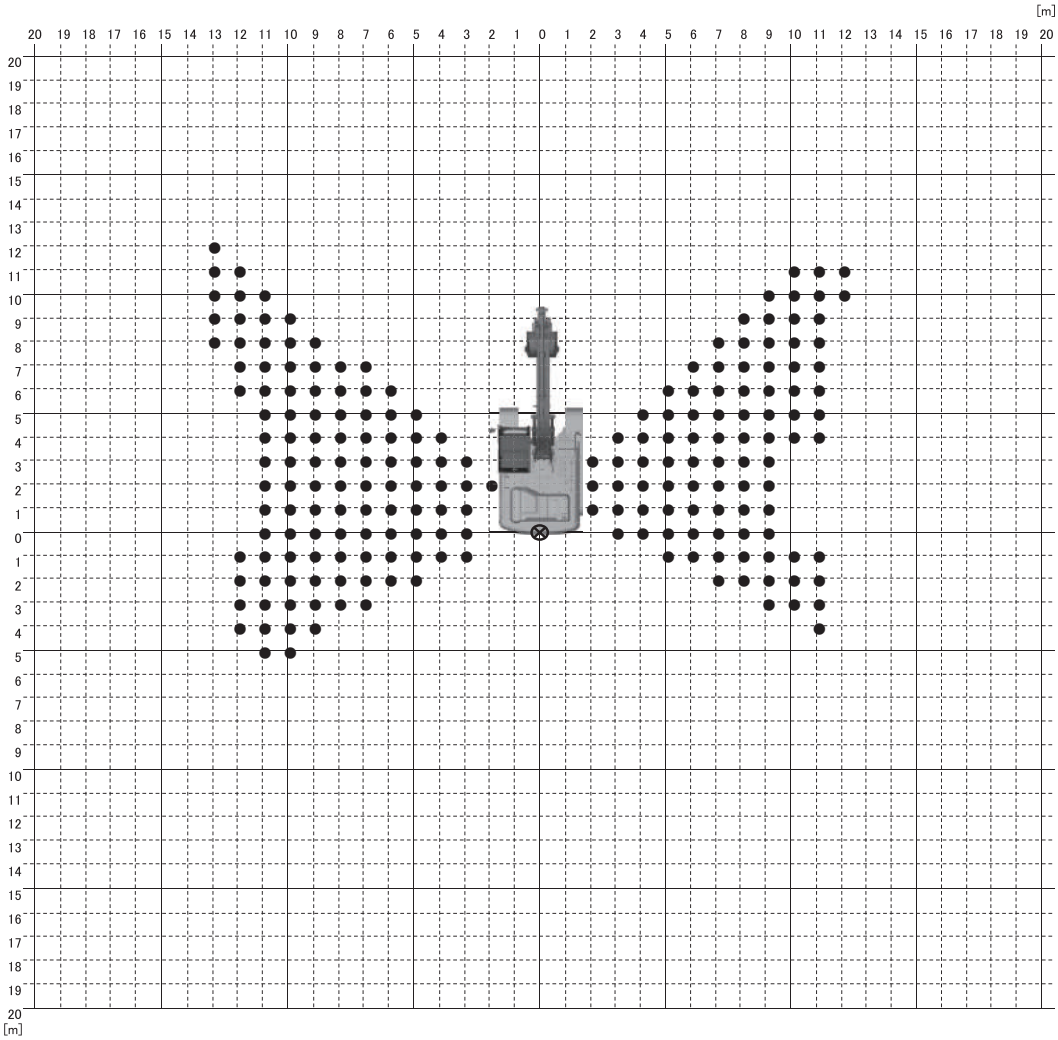

Aerial Angle visibility map
"Surrounding Image + Image to Rear"

MDFY-VM-073 en_GB

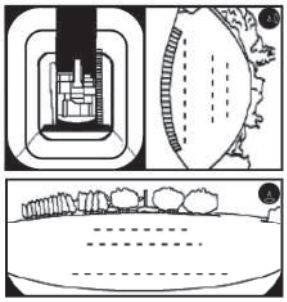

Monitor display

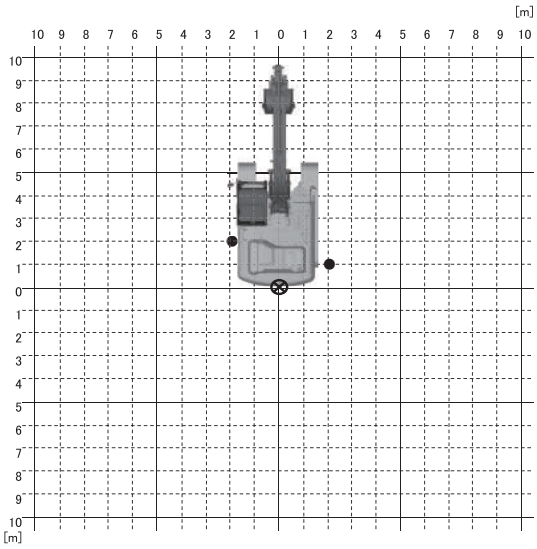

Aerial Angle visibility map
"Surrounding Image + Image to Right Side + Image to Rear"

MDFY-VM-074 en_GB

Aerial Angle (Surround View) Visibility Map for ZX240-7 class

This map shows the area where a person 1.6m tall is displayed on the monitor screen in a recognizable size, minimal 7.0mm according to ISO 16001. This map can be used as a guide when conducting a site risk assessment.

Note: local circumstances, contrast between colours, light intensity etc. may affect Visibility performance.

Area where a person is recognizably displayed on the monitor

⊗ : measurement center point

● : location where 1.6m person shown as minimal 7mm on the monitor

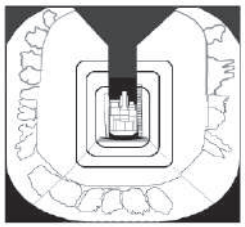

Monitor display

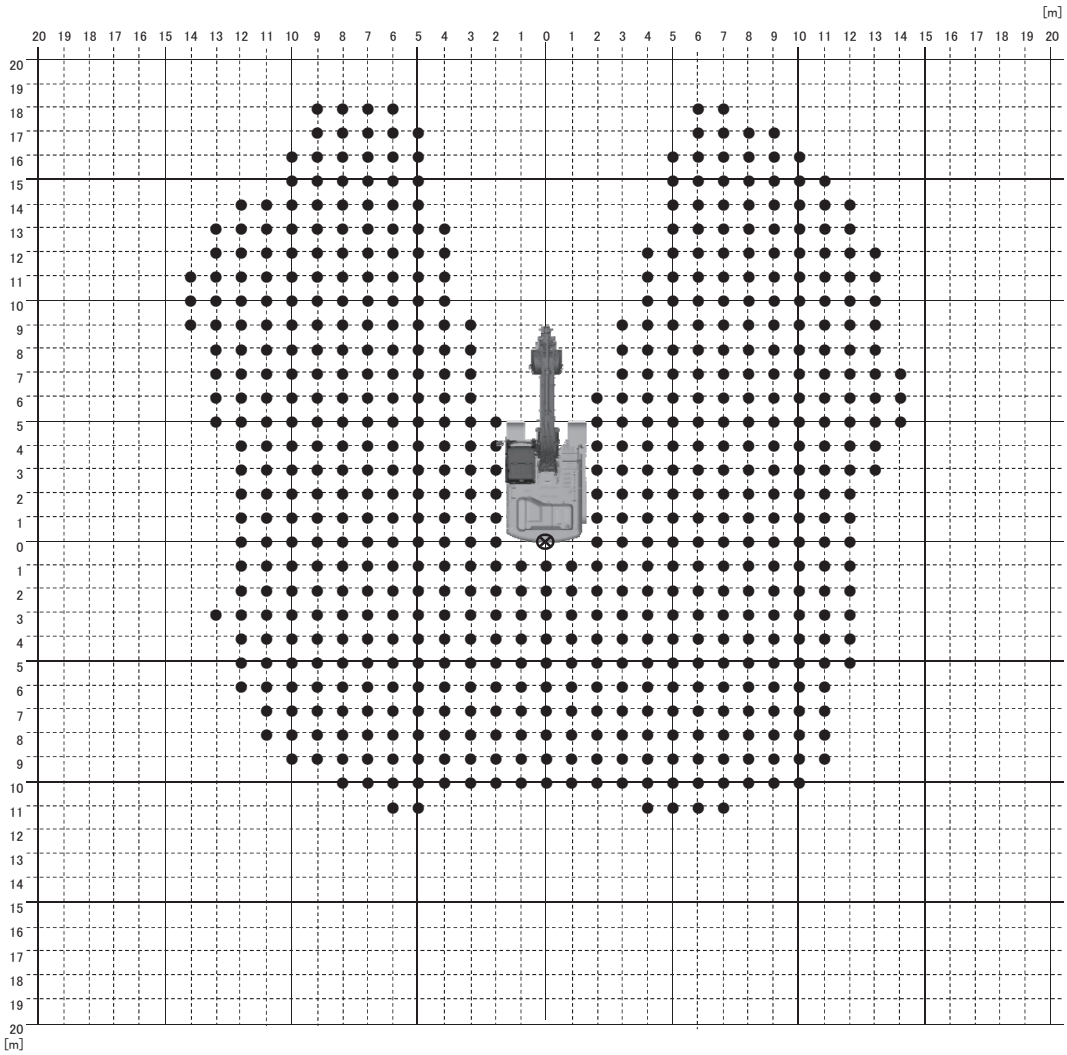

Aerial Angle visibility map
"Surrounding Image"

MDFY-VM-022 en_GB

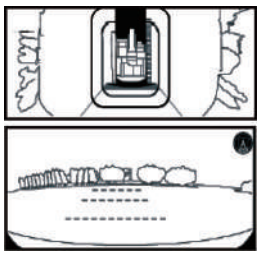

Monitor display

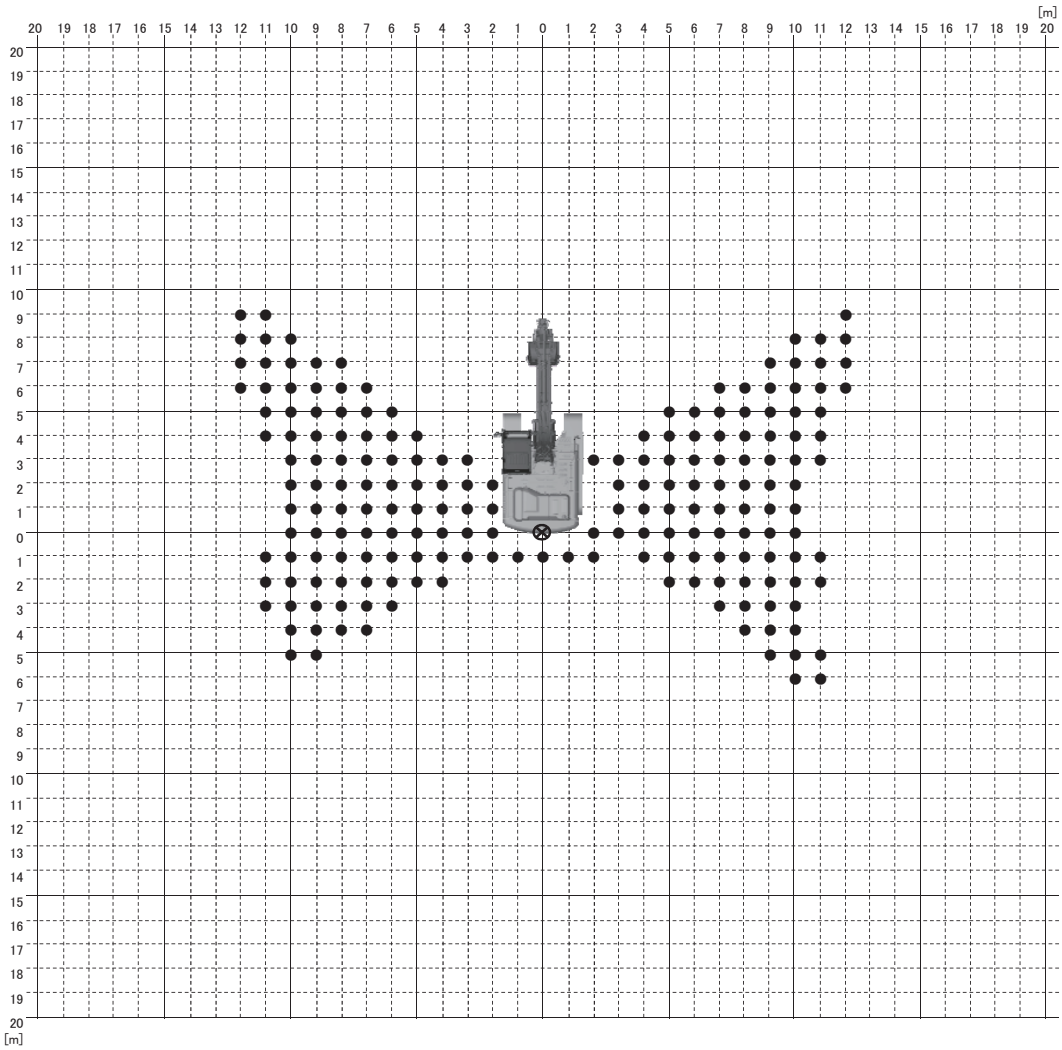

Aerial Angle visibility map
"Surrounding Image + Image to Rear"

MDFY-VM-023 en_GB

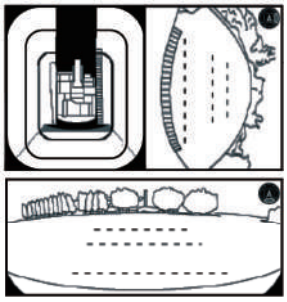

Monitor display

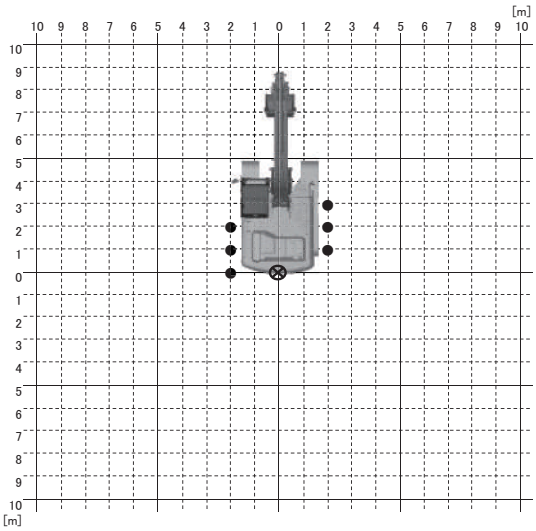

Aerial Angle visibility map
"Surrounding Image + Image to Right Side + Image to Rear"

MDFY-VM-024 en_GB

Aerial Angle (Surround View) Visibility Map for ZX300-7 class

This map shows the area where a person 1.6m tall is displayed on the monitor screen in a recognizable size, minimal 7.0mm according to ISO 16001. This map can be used as a guide when conducting a site risk assessment.

Note: local circumstances, contrast between colours, light intensity etc. may affect Visibility performance.

Area where a person is recognizably displayed on the monitor

⊗ : measurement center point

● : location where 1.6m person shown as minimal 7mm on the monitor

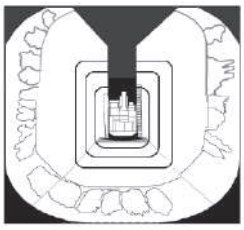

Monitor display

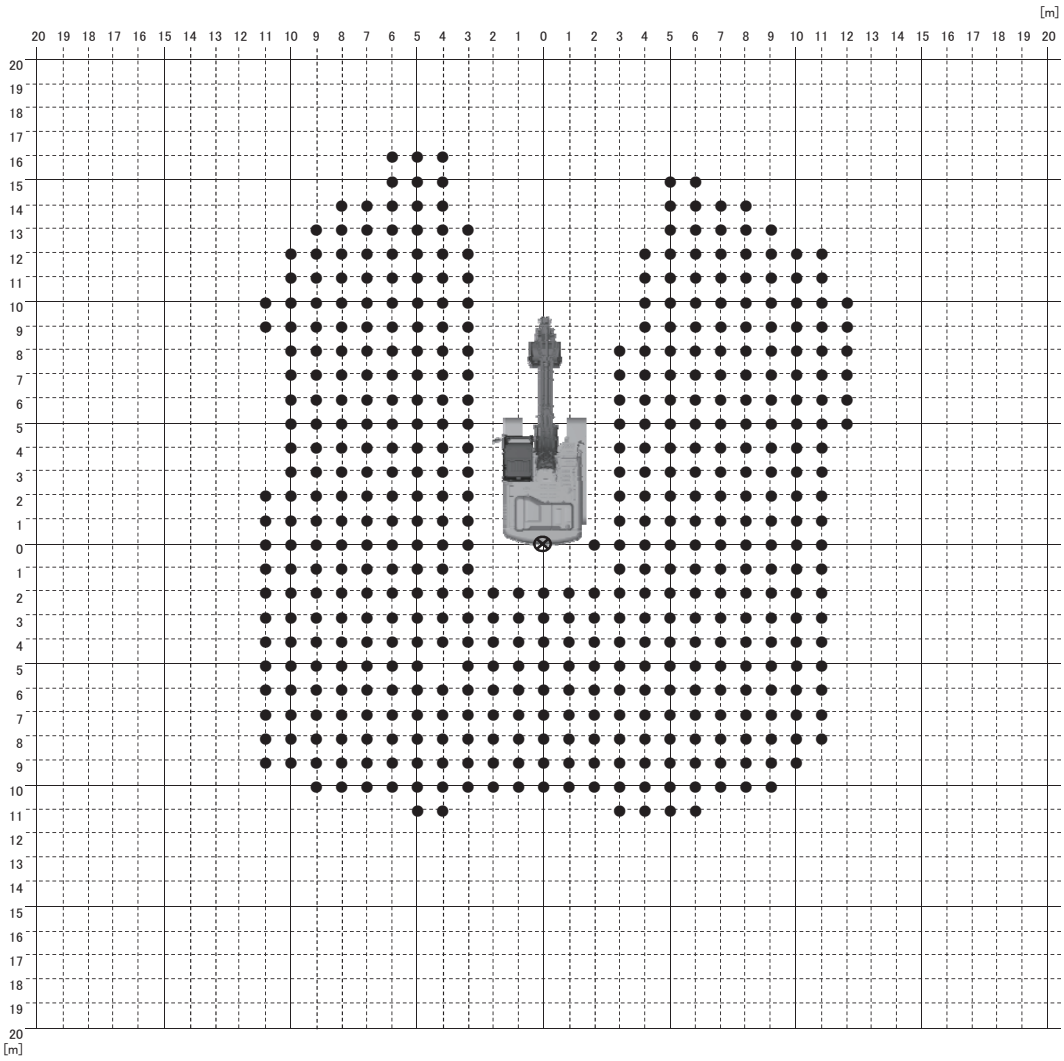

Aerial Angle visibility map
"Surrounding Image"

MDFY-VM-025 en_GB

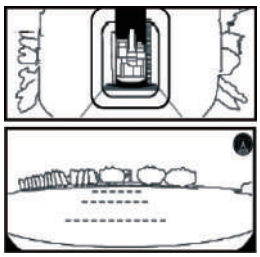

Monitor display

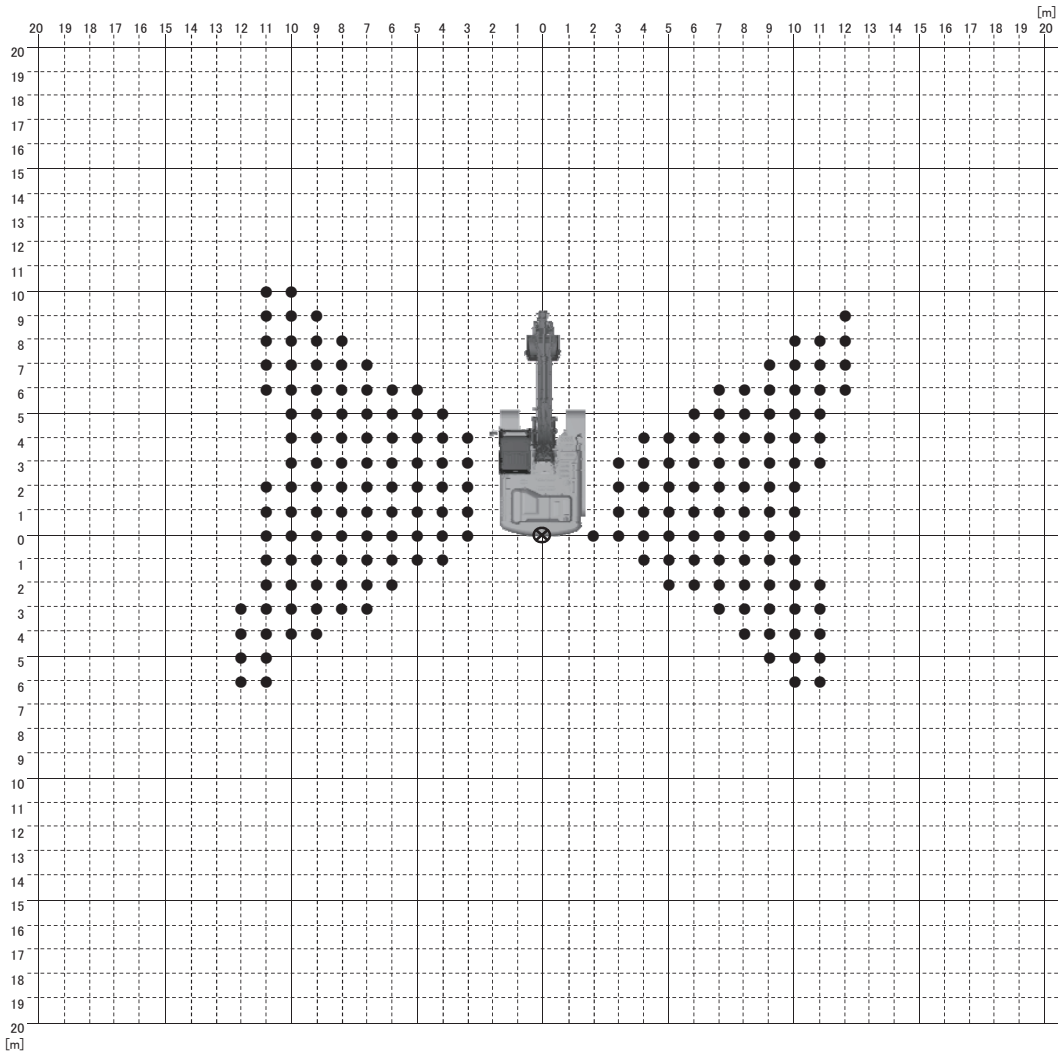

Aerial Angle visibility map
"Surrounding Image + Image to Rear"

MDFY-VM-026 en_GB

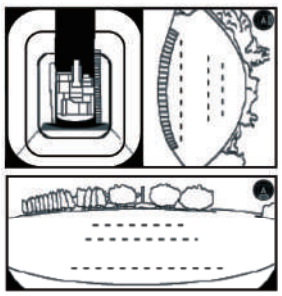

Monitor display

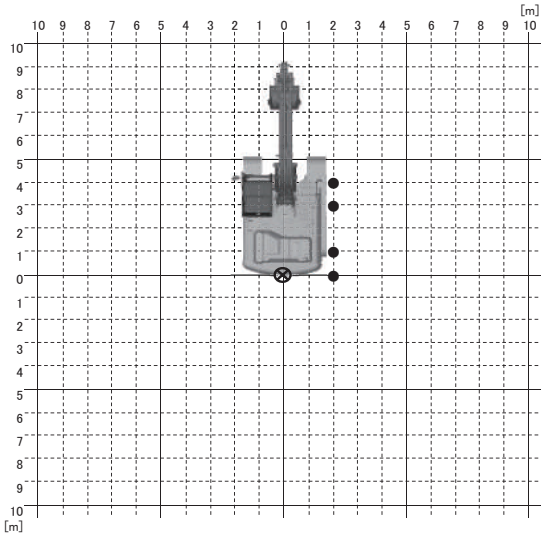

Aerial Angle visibility map
"Surrounding Image + Image to Right Side + Image to Rear"

MDFY-VM-027 en_GB

Aerial Angle (Surround View) Visibility Map for ZX330-7 class

This map shows the area where a person 1.6m tall is displayed on the monitor screen in a recognizable size, minimal 7.0mm according to ISO 16001. This map can be used as a guide when conducting a site risk assessment.

Note: local circumstances, contrast between colours, light intensity etc. may affect Visibility performance.

Area where a person is recognizably displayed on the monitor

⊗ : measurement center point

● : location where 1.6m person shown as minimal 7mm on the monitor

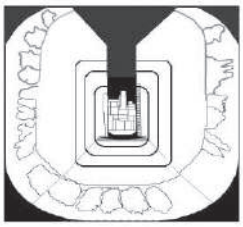

Monitor display

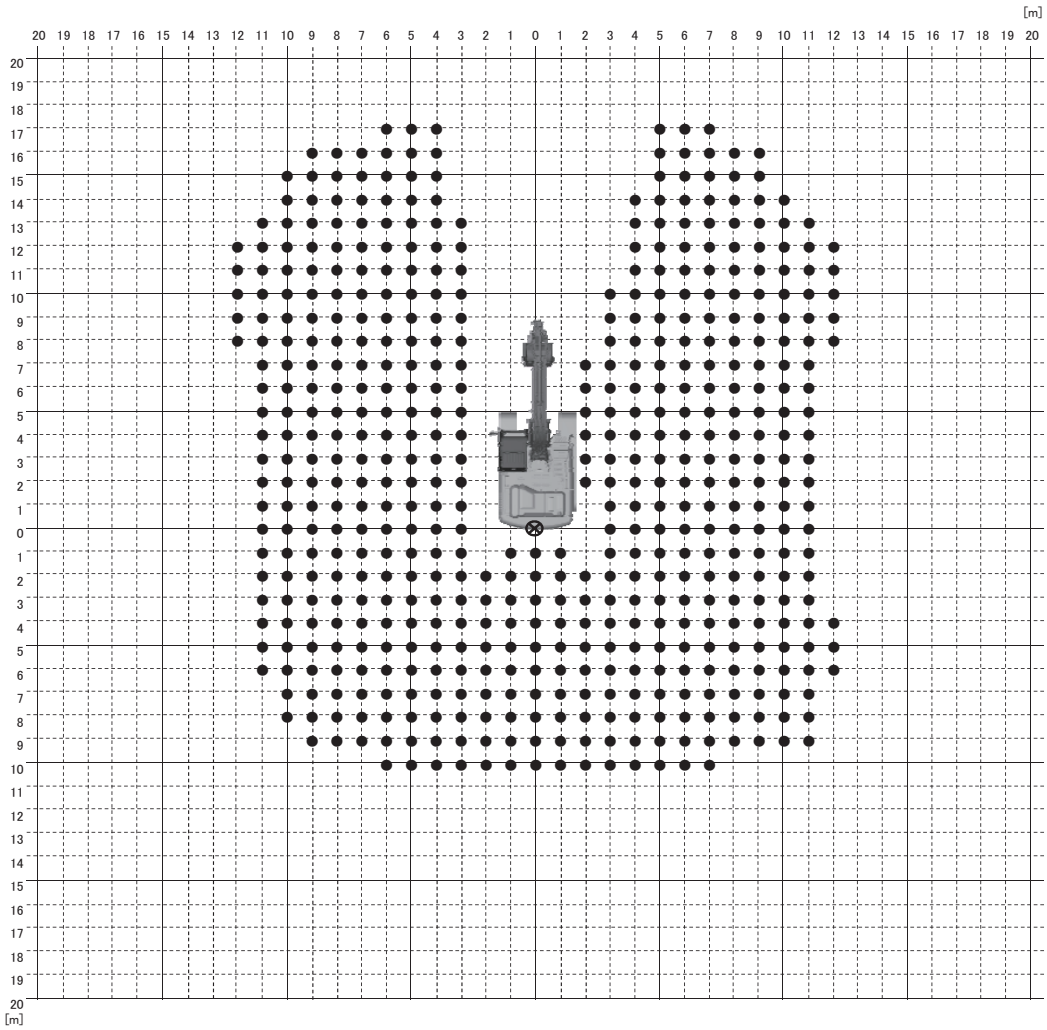

Aerial Angle visibility map
"Surrounding Image"

MDFY-VM-028 en_GB

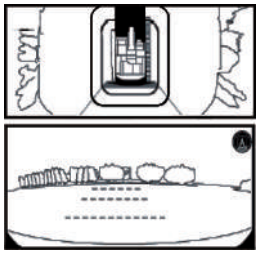

Monitor display

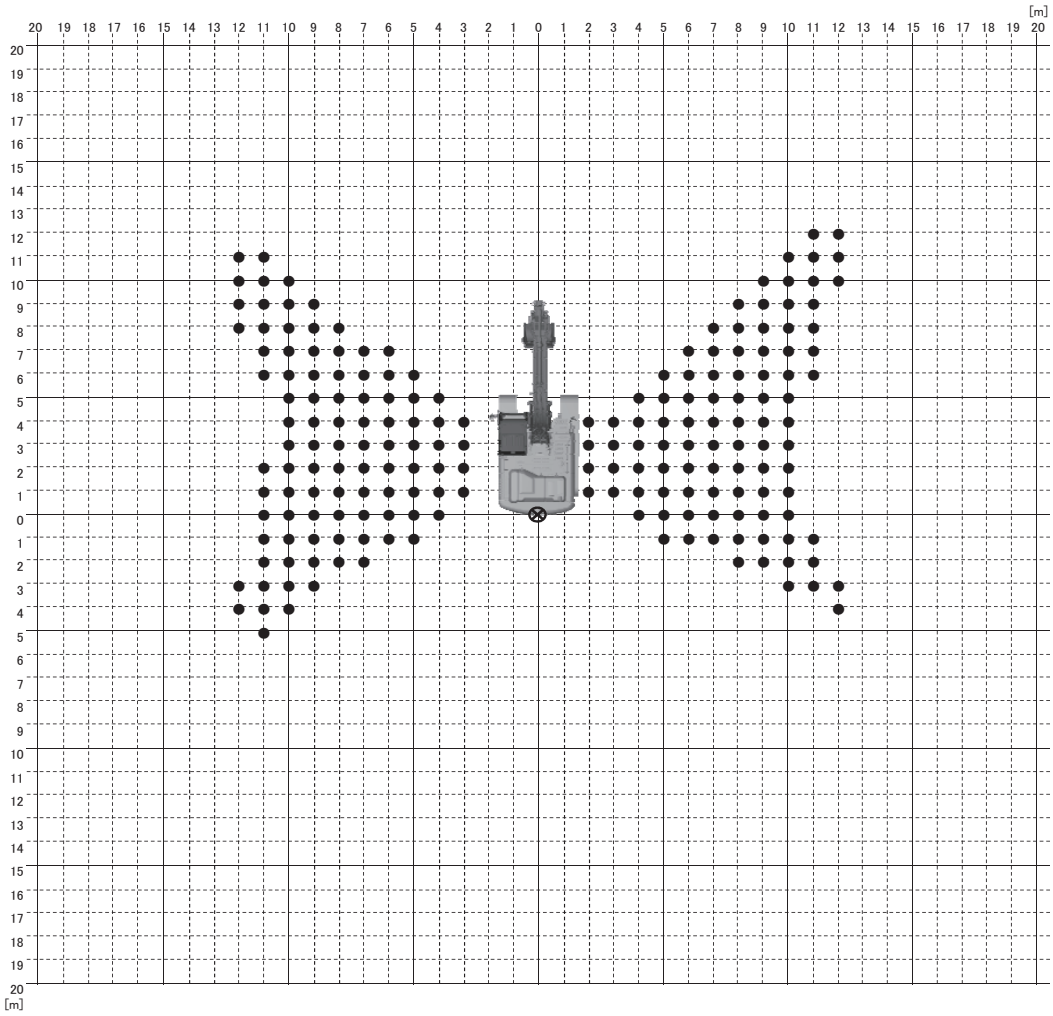

Aerial Angle visibility map
"Surrounding Image + Image to Rear"

MDFY-VM-029 en_GB

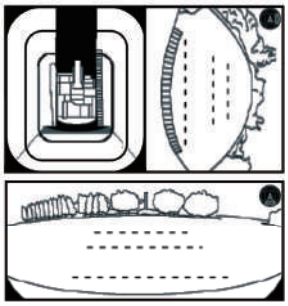

Monitor display

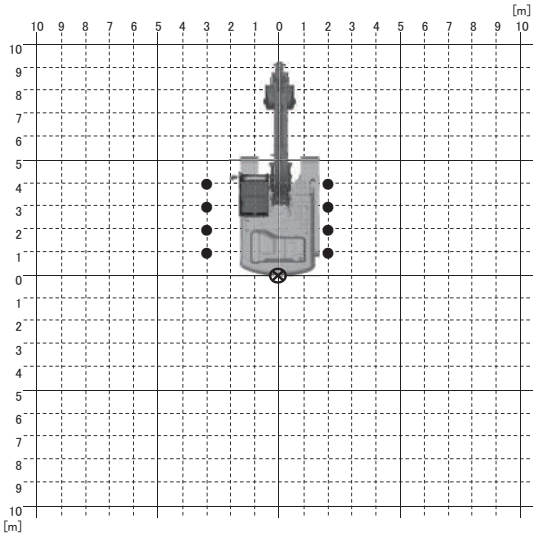

Aerial Angle visibility map
"Surrounding Image + Image to Right Side + Image to Rear"

MDFY-VM-030 en_GB

Safety Signs

This chapter describes the positions of all the safety signs adhered to the machine. Check the content of safety signs on the actual machine to ensure safe handling and operation.

Ensure that the safety signs are clean at all times. If a safety sign is damaged or lost, order a new one promptly and replace. When ordering new a safety sign, the part number can can be found at the bottom right of the corresponding illustration. Use this make the order.

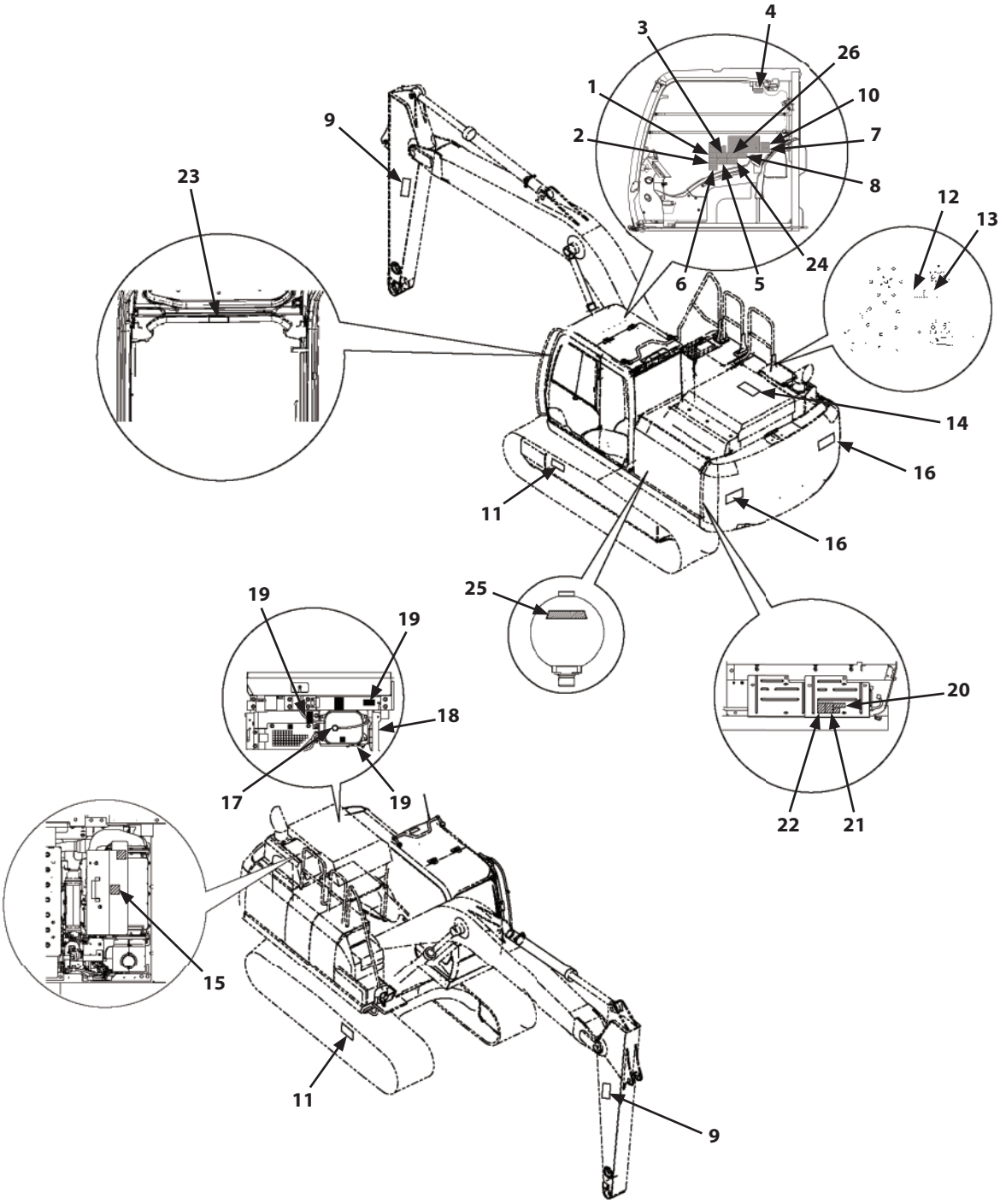

SS-4210-2 ja

1.

Warning
Always read the user's manual before operating, servicing, disassembling, assembling, or transporting the machine.

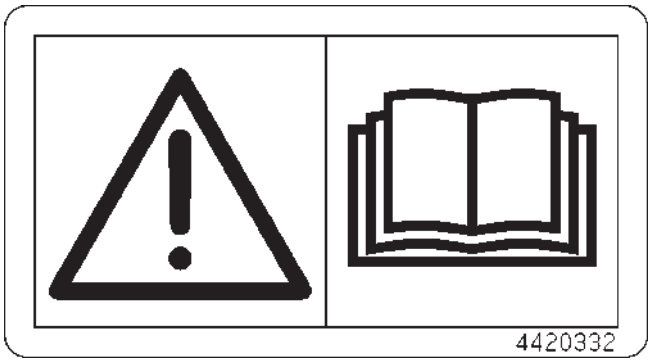

SS4420332-2 ja

2.

If the machine is parked and moves unexpectedly, serious injury or death due to crushing may result.
Be sure to lower the front attachment to the ground, lock the pilot shut-off lever, and remove the engine key before leaving the machine unattended.

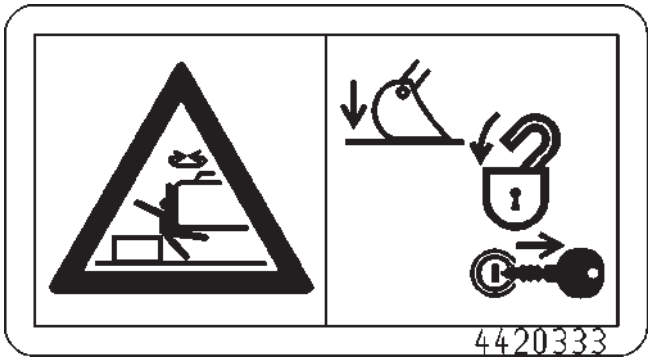

SS4420333-2 ja

3.

Electrocution is possible if the machine is operated too close to power lines.
Always keep a safe distance from power lines.

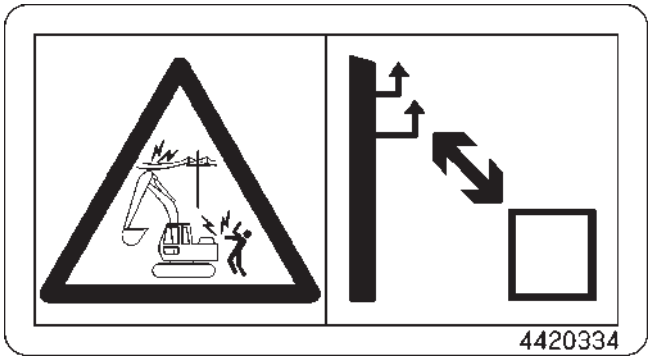

SS4420334-2 ja

4.

Personal injury may result if the stored front window slips and falls.
Securely lock the window in its stored position.

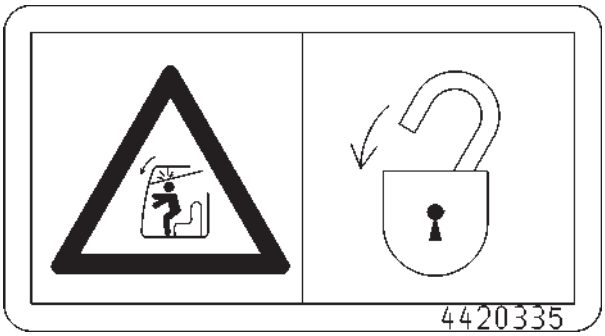

SS4420335-2 ja

5.

If the machine should overturn, the operator may be bashed inside the cab, and/or thrown from the cab and/or crushed by the overturning machine. Always wear the seat belt while operating the machine.

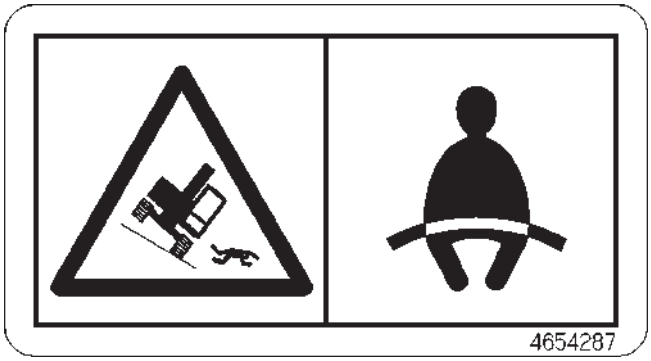

SS4654287-1 ja

6.

Do not extend your hands or head from the window. Your hands or head may come in contact with the boom.

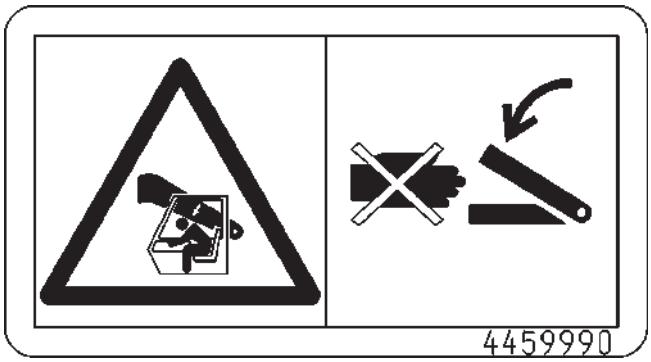

SS4459990-2 ja

7.

When operating with 2-piece boom, the bucket may come in contact with the cab. Operate the machine with care not to allow the tip of the bucket to hit the cab while rolling in the front attachment.

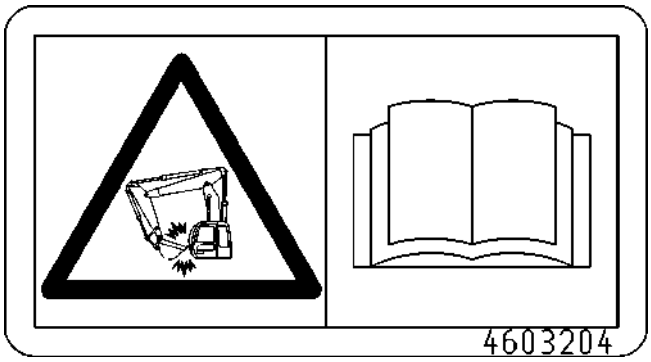

SS4603204-1 ja

8.

When operating the front attachment, bucket may come in contact with the cab parts. Operate the machine with care not to allow the tip of the bucket to hit the cab while rolling in the front attachment.

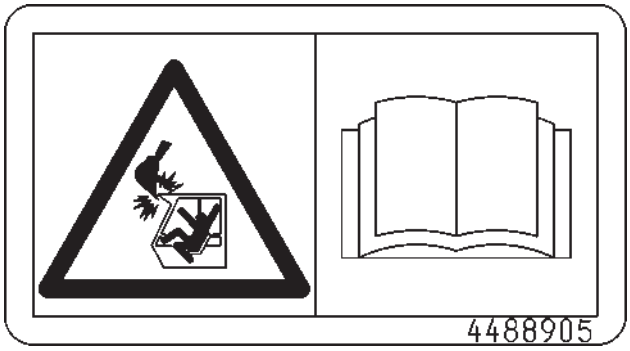

SS4488905 ja

9.

If hit by equipment a serious injury may result.
Stay away from the machine.

SS3089581 ja

10.

When an attachment (such as breaker, crusher, quick coupler, etc.) whose overall length is longer than a standard bucket is attached, the attachment may interfere with the cab or boom. Be careful not to hit the cab or boom with the tip of the attachment when retracting the arm.

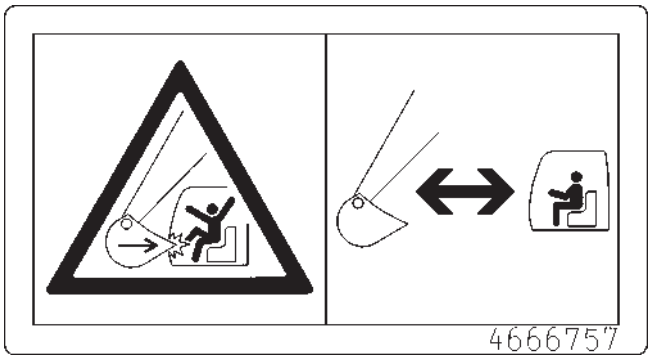

SS4666757-1 ja

11.

Sign indicates a burn hazard from compressed air and spurting hot oil if the oil inlet is uncapped during or right after operation.
Read the manual for safe and proper handling.

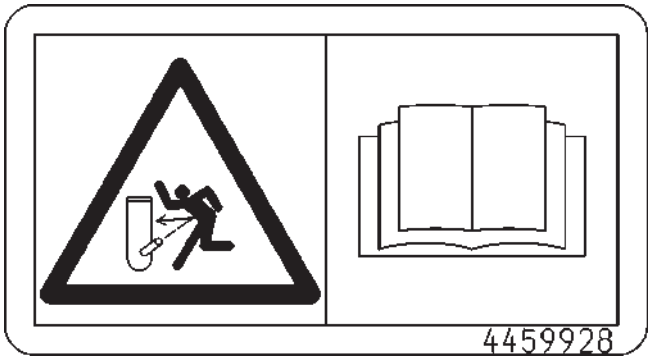

SS4459928-1 ja

12.

Sign indicates a burn hazard from spurting hot water or oil if radiator or hydraulic tank is uncapped while hot. Allow radiator or hydraulic tank to cool before removing cap.

SS4420336-3 ja

13.

Sign indicates a hazard of falling.
Do not stand on this place.

SS3092126 ja

14.

Touching hot parts during use or immediately after stopping presents the hazard of getting burned. Do not touch hot parts.

SSYA00036144-2 ja

15.

Anyone within the swing radius may be crushed by the upperstructure when the machine swings.
Stand clear of the swing radius.

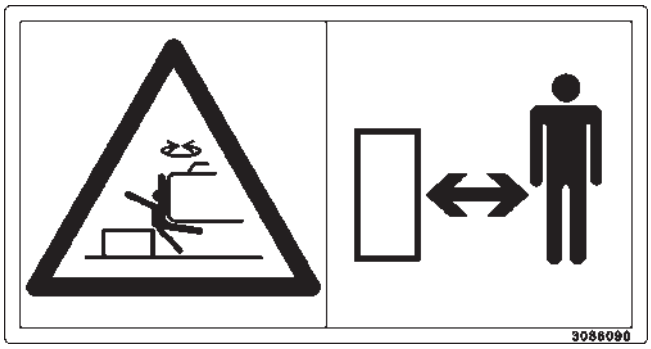

SS3086090-2 ja

16.

Hot coolant or oil may spout out if a cap is removed while the machine is still hot, possibly causing a burn.
Do not remove caps while the machine is still hot.

SSYA00074843 ja

17.

Sign indicates the hazard of rotating parts, such as belts, etc. that could cause injury if someone were to be entangled.
Allow to stop completely before inspection and maintenance.

SS4623852 ja

18.

Sign indicates a hazard of rotating parts, Such as fan.
Turn off before inspection and maintenance.

SS4408870-2 ja

19.

Sign indicates an electrical hazard from handling the cable.
Read the manual for safe and proper handling.

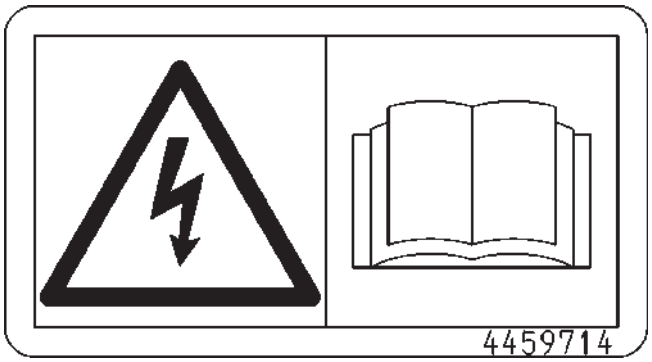

SS4459714-1 ja

20.

Sign indicates an explosion hazard.
Keep fire and open flames away from this area.

SS4460067-2 ja

21.

Skin contact with electrolyte will cause burns. Electrolyte splashed into the eyes will cause blindness. Take care not to touch electrolyte.

SS4460056-2 ja

22.

Use the handle only to open or close the front window. Do not use the handle to enter or leave the cab. If the window is not locked, it may move possibly causing you to lose your balance and fall.

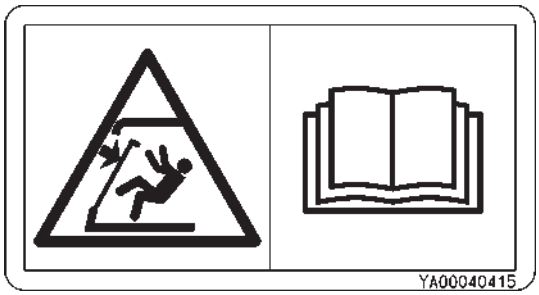

SSYA00040415 ja

23.

To those persons fixed with any medical device. Including implantable device such as a cardiac pacemaker. Please read the instruction manual carefully and follow the instructions before using this machine.

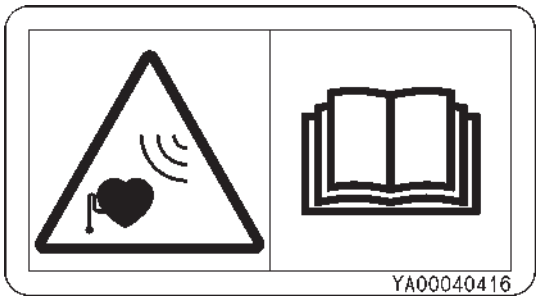

SSYA00040416 ja

24.

WARNING
IT CONTAINS NITROGEN UNDER HIGH PRESSURE.
DON'T ALLOW FIRE OR HEAT NEAR IT. DON'T TRY TO DISASSEMBLE IT.
WEAR EYE PROTECTION AND CAREFULLY DRILL A HOLE AT THE POINT MARKED × TO RELEASE GAS PRESSURE BEFORE DISPOSAL.

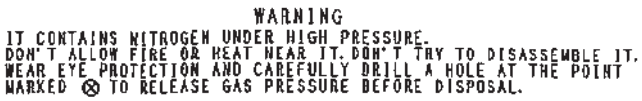

SS-3212 ja

25.

When working at blasting sites, there is a risk of accidental explosion due to the wireless equipment during operation. Always keep the machine a safe distance away from blasting sites and detonators.

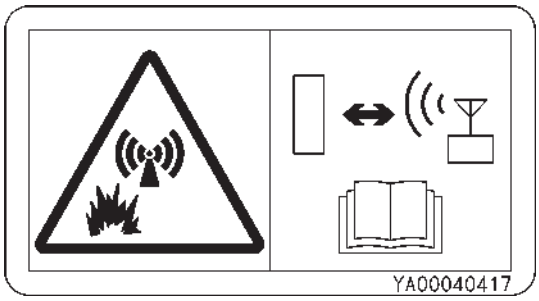

SSYA00040417 ja

MEMO

Name of Components

1- Bucket
2- Bucket Cylinder
3- Arm
4- Arm Cylinder
5- Boom Cylinder
6- Boom
7- Fuel Tank
8- Hydraulic Oil Tank
9- Engine
10- Aftertreatment Device
11- Counterweight
12- Travel Device
13- Track Shoe
14- Front Idler
15- Cab
16- DEF Tank (Except ZX120-7 class)
17- Expansion Tank
18- Battery Disconnect Switch

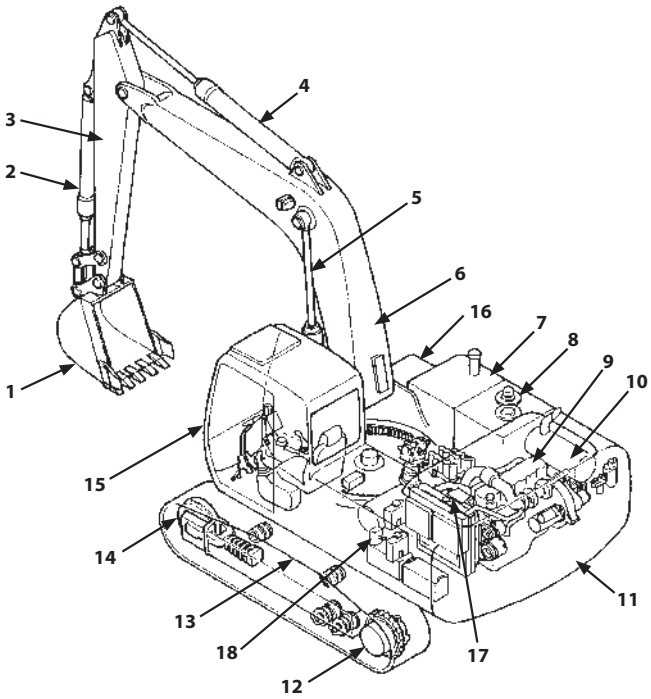

MDC1-07-056-1 ja

NOTE

A typical model is shown at right. Some parts may differ depending on the model of the machine.

Getting ON and OFF the Machine

Footholds (1) and handrails (2) are provided around the machine for safe entry and exit to the cab.

They also enable safe inspection and maintenance.

Never jump on or off the machine, as it is very dangerous.

WARNING

- **When lifting the cab/main body or transporting the machine, never attach wire to footholds (1) or handrails (2).**
- **The door handle (3) is not a handrail. Do not use as a handrail when getting on and off the machine.**
- **Do not hold onto control levers (4) or pilot shut-off lever (5) when climbing in or out.**

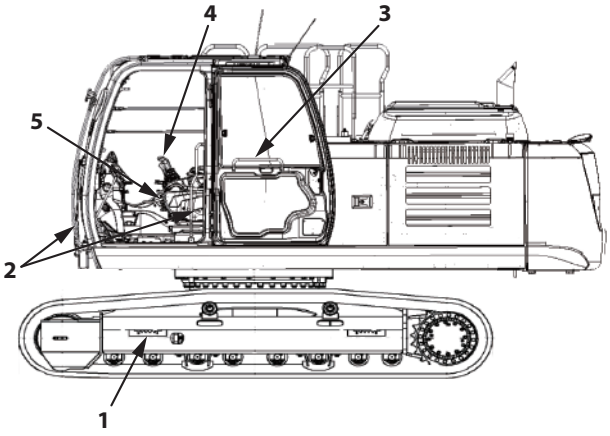

MDFY-01-095-1 ja

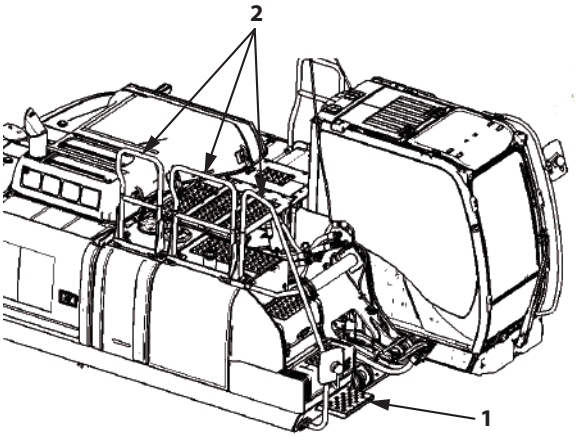

MDFY-01-093-1 ja

About Aftertreatment Device

The aftertreatment device removes particulate matter (PM) and nitrogen oxide (NOx) from the exhaust gas. Follow the instructions below to prevent the aftertreatment device from being damaged.

WARNING

- **Exhaust gas from the aftertreatment device, muffler, exhaust piping and tail piping becomes hot during and just after engine running and regeneration of aftertreatment device. Be careful not to touch or get too close to any part of the exhaust system. Doing so may result in a burn.**
- **If flammable materials such as dead leaves or paper scraps are around the muffler filter, they may cause a fire.**
- **To avoid burns, stop the engine and make sure the engine has sufficiently cooled down before performing maintenance.**

IMPORTANT

- **Only use fuel that complies with JIS K-2204, EN-590 or ASTM D-975 standards. If the fuel described above is not used, exhaust gas that exceeds regulation values may be discharged and serious engine problems may occur.**
- **Refill with DEF which meets Japanese Industrial Standards (JIS) or International Organization for Standardization (ISO). If improper liquid (diesel oil, kerosene or gasoline) is refilled in the DEF tank, fire or system failure may result.**
- **Use only genuine Hitachi engine oil. Using engine oil other than Hitachi genuine oil may result in malfunction of the aftertreatment device.**
- **Do not mix poor quality diesel fuel, drainage agents, fuel additives, gasoline, kerosene, alcohol, or any other type of lubricating oil with specified diesel fuel. Using the wrong fuel may cause fuel filters to perform poorly and can cause problems in the lubricated parts of injectors. It can also affect the engine parts and aftertreatment device, leading to malfunction.**
- **Do not modify the machine without authorization. In particular, never modify air inlet and exhaust parts (air duct, aftertreatment device, exhaust gas control system, including EGR equipment or the exhaust piping). Also never disassemble the aftertreatment device. Avoid shocking the aftertreatment device by striking parts of it with other objects or dropping the device. Failure to do so may affect the exhaust gas purifying equipment, possibly damaging it or lowering its performance.**
- **White smoke may be generated during the aftertreatment device regeneration. Do not attempt to perform a manual regeneration in a poorly ventilated area.**
- **Consult your authorized dealer for inspection, maintenance and repairs of the aftertreatment device.**

NOTE

- *White deposits and PM (particulate matter) may accumulate inside the aftertreatment device. The aftertreatment device regenerates automatically to remove deposits at regular intervals. This is called auto-regeneration. Auto-regeneration may start during operation of the machine; the machine can continue to be used as-is.*
- *Do not stop the engine during regeneration unless absolutely necessary.*
- *Auto-regeneration may be terminated, depending on machine operating conditions.*
- *Usually, auto-regeneration starts approximately 15 hours (6 hours for ZX120-7 class and 100 hours for ZX160-7 and 180-7 classes) after the previous auto or manual regeneration. (*)*
- *If auto regeneration did not complete, and approximately 24 hours (7.2 hours for ZX120-7 class, and 103 hours for ZX160-7 and 180-7 classes) have passed since the previous regeneration, an aftertreatment device regeneration request flashes on the monitor. Perform manual regeneration following the specified procedure. (*)*
- *When the machine is operated without performing manual regeneration, the aftertreatment device may be damaged. Immediately move the machine to a safe area and perform manual regeneration.*
- *If approximately 45 hours (9.6 hours for ZX120-7 class, and 113 hours for ZX160-7 and 180-7 classes) pass since the previous regeneration without manual regeneration being carried out, the engine error alarm is displayed on the monitor. Contact your authorized dealer. (*)*
- *Both auto and manual regenerations restore aftertreatment device function. It is not a malfunction.*
- *White smoke may come from the exhaust pipe for several minutes after the engine starts; this is not a malfunction.*
- *Even when machine is not operated, the sound of the engine can differ from its normal sound. This is to protect the aftertreatment device and is not a malfunction.*

**Times mentioned are given as a guideline; they may vary with operating conditions.*

Layout of Equipment in Operator's Station (Illustration Contents)

The following shows the names and positioning of the equipment in the operator's station. For detailed descriptions of the various equipment, refer to the indicated in ( ).

1- Left Control Lever (1-142)
2- Left Travel Pedal (4-1)
3- Left Travel Lever (4-1)
4- Right Travel Lever (4-1)
5- Right Travel Pedal (4-1)
6- Right Control Lever (1-142)
7- Multi-Function Monitor (1-7)
8- Switch Panel (1-130)
9- Key Switch (1-136)
10- Regeneration Switch (1-30)
11- Operator's Seat (1-175)
12- Door Lock Release Lever (1-162)
13- Pilot Shut-off Lever (1-150)
14- Tray (1-153)
15- Fuse box (1-155)
16- 24V Power Supply (1-147)
17- Glove Compartment
18- Glove Compartment (Hot and Cool Box)
19- Engine Stop Switch (1-153)
20- 12V Power Supply (1-146)
21- Switch Panel (Option) (1-137)
Glove Compartment (without Optional Equipment)
22- Aerial Angle Switch (1-180)
23- Overload Alarm Switch (1-140)
24- Seat Heater Switch (1-138)
25- Rear Light (Option) (1-139)
26- Rotating Light (Option) (1-139)
27- Electrical Control Main Switch (Option) (1-141)
28- Magazine Rack (1-153)
29- Drink Holder (Below Monitor)(1-154)
30- Drink Holder (in front of Switch Box)(1-154)

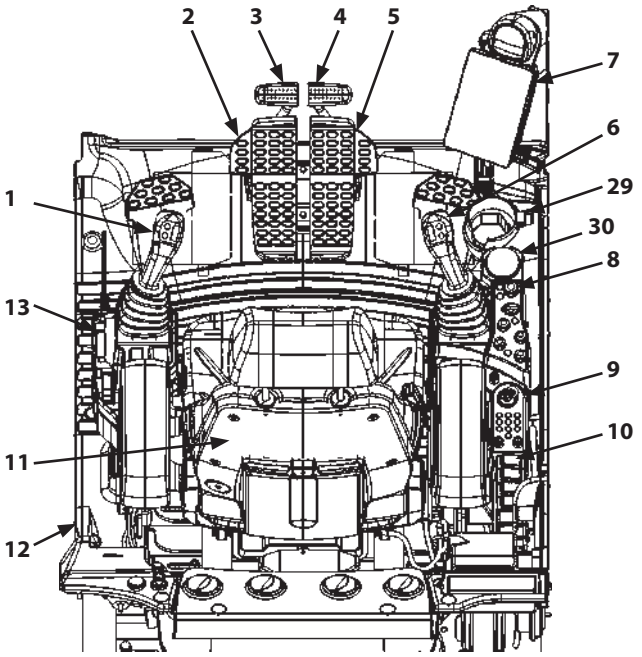

MDFY-05-001-2 ja

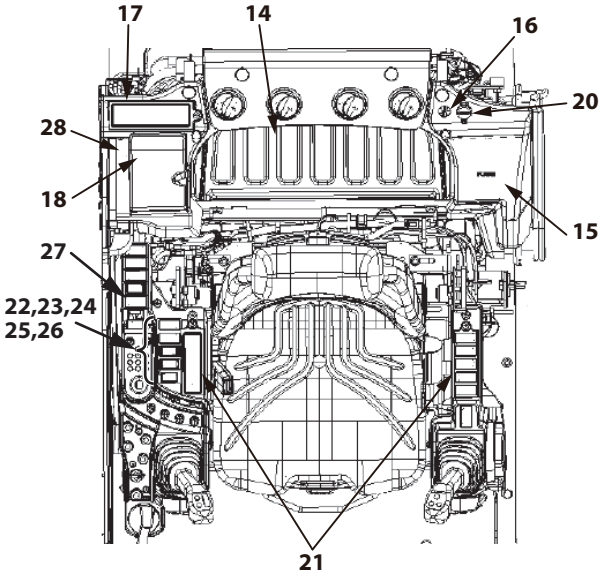

MDFY-01-036-3 ja

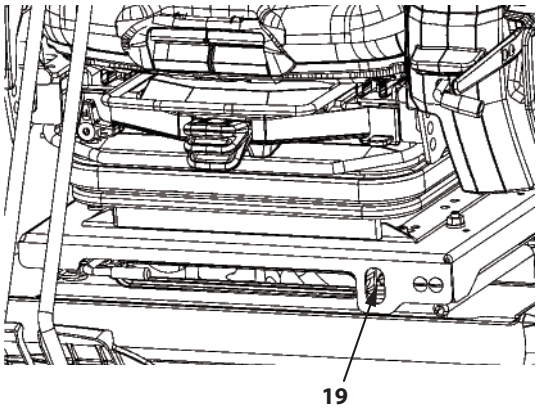

MDFY-01-024-2 ja

31- USB Power Supply (1-148)
32- Handsfree Mic (1-129)
33- Net-Use Hook (1-153)
34- Coat Hook
35- Smartphone Holder

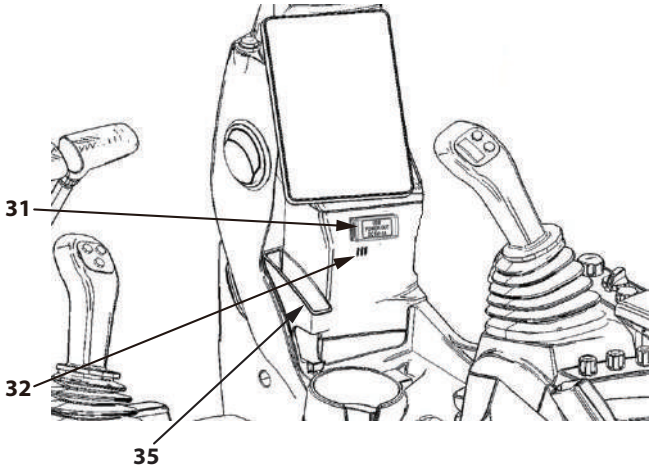

MDFY-01-038-1 ja

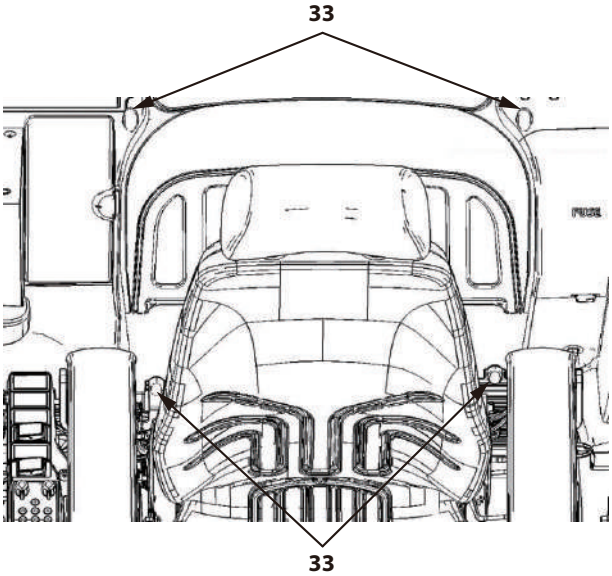

MDFY-01-039-1 ja

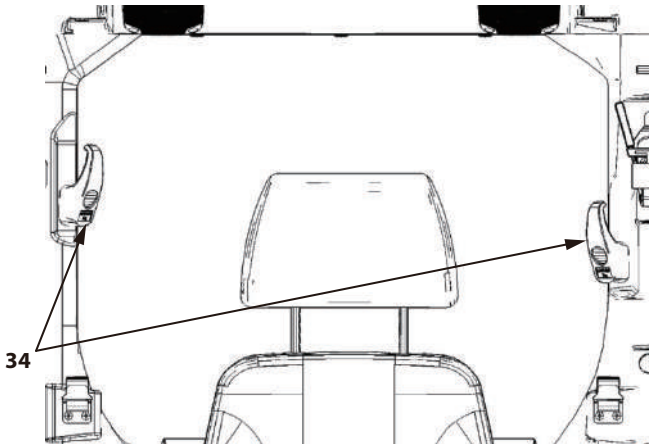

MDFY-01-040-1 ja

Multi Function Monitor

Summary

Functions

The multi-function monitor installed on this machine includes functions such as displays for the various meters, warning indicator display, radio display, air conditioner display, security functions, aerial angle display, attachment mode settings and maintenance management functions.

Screen Configuration

The multi-function monitor consists of the following screens.

There are 8 menus, and a further 19 sub menus.

NOTE

- *The monitor explanations for "Air Conditioner" and "Audio" are provided on other pages together with the explanations of switch operations. See "Auto Air Conditioner (Air Conditioner) Operation" (1-92), and "Audio Operation" (1-107).*
- *The items marked "*" in the transition diagram below are only displayed if the machine happens a fault.*

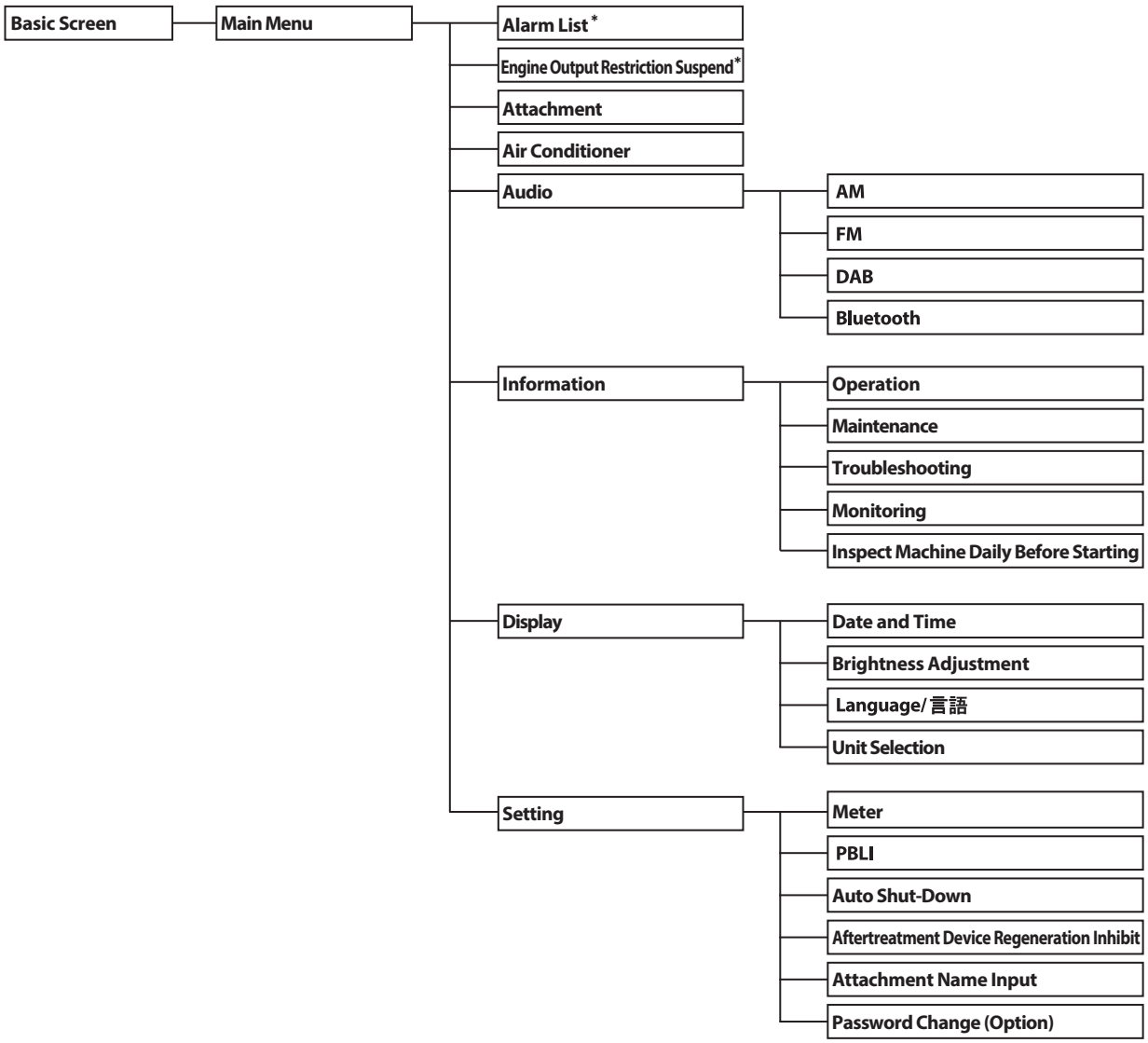

MDFY-00-001 en_GB

Basic Operation of Multi-Function Monitor

Switches for Multi-Function Monitor Operation

Use the switches on the switch panel to perform operations and make settings on the multi-function monitor.
The following describes the layout and function of the various switches.

1. Selector/Set Switch
2. Home Switch
3. Back Switch
4. Numeric Keypad

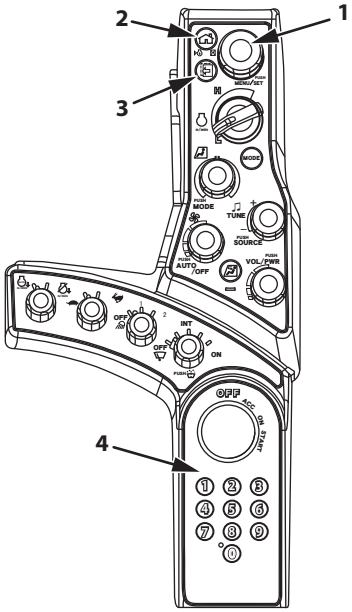

Switch Panel

MDFY-01-002-8 ja

Selector/Set Switch

Rotate and push the selector/set switch to toggle the multi-function monitor and make settings.

- Push
  From the basic screen, push to open the menu screens.
  On the menu screen and all screens accessed from the menu screen, pushing finalizes a selection.
- Rotate
  Moves cursor.
  The part selected in blue on the monitor is the cursor.

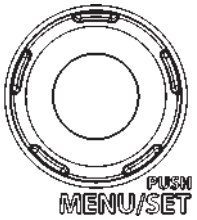

MDFY-01-005 ja

Home Switch (Monitor)

Allows any screen to return to the basic screen.
When the key switch is the ON, long press the home switch to display the engine oil level and coolant level status on the monitor. For further details, refer to "Checks Before Starting the Engine" in Chapter 3 "OPERATING THE ENGINE".
When the key switch is not engaged, long press the home switch to display the fuel gauge and hour meter on the monitor.

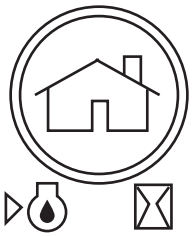

MDFY-01-004 ja

Back Switch (Monitor)

Push this switch to return to the previous screen.

MDFY-01-003 ja

Numeric Keypad

When the work light is turned ON, the monitor changes to night mode screen.
Even if the work light is turned ON, you can activate the daytime screen by pushing "0" on the numeric keypad.

If the security functions (option) are ON, the numeric keypad is used inputting password.
Push the numeric keypad of 1 to 8 while the radio is ON, the radio station will switch to memorized channel of 1 to 8.

When calling handsfree on a cell phone, use buttons “1” and “3” on the numeric keypad to operate the cell phone.

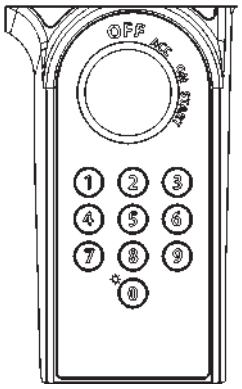

MDFY-01-017 ja

For details about how to call hands free on a cell phone, refer to “Handsfree Calling with Bluetooth®” (1-129).

Displaying the Basic Screen

IMPORTANT

Start the engine after the basic screen is displayed.

When the key switch is turned to the ACC or ON position, the starting screen displays for about 2 seconds. When the key switch is in the ACC position, only the hour meter, clock and radio are displayed. When the key switch is in the ON position, the basic screen is displayed.

NOTE

If the security functions (optional) are ON, the password input screen will be displayed after the "starting screen". For the instructions, see "Security Functions (Optional)" (1-12) on the following page.

Starting Screen

MDFY-MT-150 ja

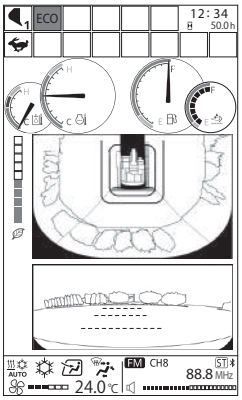

Basic Screen

MDFY-MT-100 ja

Security Functions (Optional)

Input Password

IMPORTANT

- **When required to activate the security function, contact your authorized dealer.**
- **If the password is forgotten, the machine must be modified. Be extremely careful not to forget the password.**

1. Turn the key switch ON. After the starting screen is displayed, the password input screen is displayed.

Starting Screen

MDFY-MT-150 ja

2. Input a password with the numeric keypad.
3. The monitor unit compares the input password to the registered one. If they match, the basic screen is displayed. The engine is ready to run. If an incorrect password is entered 3 times, a buzzer sounds for 30 seconds. During that time, the buzzer does not stop even if the key switch is turned ON/OFF.

   NOTE

   If you make a mistake while entering the password, push the back switch to erase the entered characters.

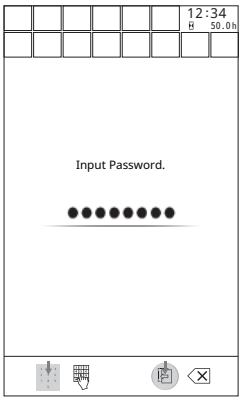

Password Input Screen

MDFY-MT-129 en_GB

4. After 30 seconds, if the key switch is turned to the ON position, the starting screen displays and the password input screen displays again. Then the password can be entered again.
5. If an incorrect password is entered again, the buzzer sounds for a further 30 seconds.

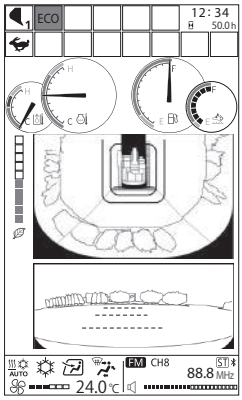

Basic Screen

MDFY-MT-100 ja

Extending the Password Duration Time

IMPORTANT

This operation only applies to machines that require a password to display the basic screen.

The password duration screen can be used to set a password duration time. Once set, the password does not need to be entered if machine is restarted within the duration time.

1. When turning the key switch from ON to ACC position, the monitor unit displays the password duration screen for 10 seconds.

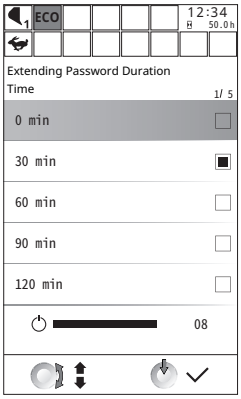

Password Duration Screen (Key Switch: OFF)

MDFY-MT-113 en_GB

2. While the password duration screen is still displayed, rotate selector/set switch (1) to highlight the relevant time. Pushing selector/set switch (1) sets the password duration time.

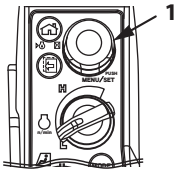

MDFY-01-094-4 ja

Duration time	0 minutes
Duration time	30 minutes
Duration time	60 minutes
Duration time	90 minutes
Duration time	120 minutes

NOTE

If a password duration time is not set, the duration is set to 0.

3. If the key switch is turned to the ON position within the password duration time, the monitor unit displays the basic screen after the starting screen.

Starting Screen

MDFY-MT-150 ja

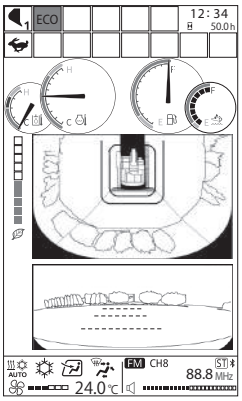

Basic Screen

MDFY-MT-100 ja

Main Menu Display

To select or finalize a menu, use selector/set switch (1) on the switch panel.
To select a menu item, follow the procedure below.

1. Display the basic screen.

   NOTE

   For how to display the basic screen, refer to "Displaying the Basic Screen" (1-11).

2. With the basic screen displayed, press selector/set switch (1) to display the main menu.

   IMPORTANT

   If a problem has occurred with the machine, the following menu will appear above the menu items.

   - **Alarm List**
   - **Engine Output Restriction Suspend**

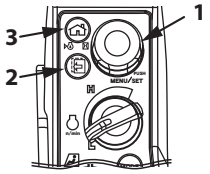

MDFY-01-094-9 ja

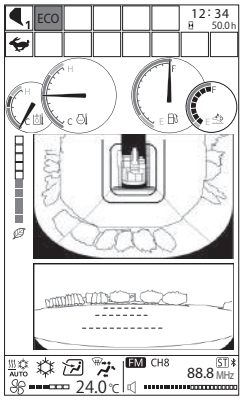

Basic Screen

MDFY-MT-100 ja

3. Rotate selector/set switch (1) to highlight items.
   The selected menu will be highlighted in blue.
   Move the cursor to select a menu.
4. Push selector/set switch (1).
   The screen corresponding to the selected menu will be displayed.

NOTE

- *After menu selection, the monitor will revert to the basic screen after 300 seconds if no operation is performed.*
  In this case, any settings made on the screen will be erased.
- *When using the monitor screen pressing back switch (2) will cause the monitor to revert to the previously displayed screen.*
  Press home switch (3) to return to the basic screen.

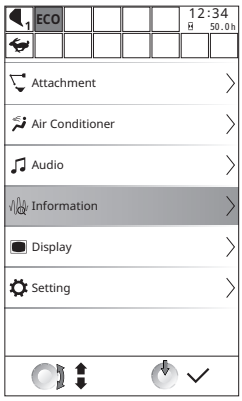

Main Menu Screen

MDFY-MT-029 en_GB

Basic Screen (Illustration Content)

Following is a description of the names and layout of the various meters and icon displayed on the multi-function monitor. For explanations of the various individual meters and icons, refer to the page shown in ().

1- Attachment Indicator (1-17)
2- Power Mode Display (1-132)
3- Auto Shut-Down Display (1-84)
4- Aftertreatment Device Display (1-28)
5- Fuel Gauge (1-18)
6- DEF Gauge (except ZX120-7 class) (1-19)
7- Hour Meter, Clock (1-18)
8- Sub Meter (1-79)
9- Camera Image (1-180)
10- Audio Display (1-107)
11- Air Conditioner Display (1-92)
12- Alarm Indication (1-20)
13- Eco Gauge (1-79)
14- Coolant Temperature Gauge (1-19)
15- Hydraulic Oil Temperature Gauge (1-79)
16- Auto-Idle Display (1-131)
17- Travel Mode Display (1-131)

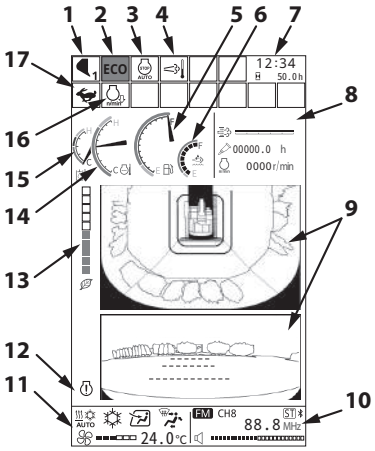

MDFY-MT-001-1 ja

Attachments Display

The selected attachment is displayed.
The displayed icons change depending on the selected attachment.
The icons available for selection are as follows.
For how to change the attachment mode, refer to “Attachments” (1-35).

Bucket Mode

MDFY-00-042 ja

Breaker

MDFY-00-043 ja

Pulverizer

MDFY-00-044 ja

Crushers

MDFY-00-045 ja

Vibrating Hammer

MDFY-00-046 ja

Grapple

MDFY-00-047 ja

Clamshell

MDFY-00-048 ja

Thumb

MDFY-00-049 ja

Rotary Tilt

MDFY-00-050 ja

Tilt Bucket

MDFY-00-051 ja

Miscellaneous

MDFY-00-052 ja

Hour Meter (1)

The total accumulated operating hours since the machine started working is displayed in units of hours (h).

The single digit after the decimal point indicates tenths of an hour (6 minutes).

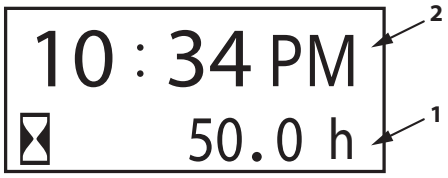

MDFY-01-046-1 ja

Clock (2)

Indicates the current time.

24-h/12-h display can be selected.

(For toggling between display modes, refer to Date and Time)

Fuel Gauge

The remaining fuel amount is indicated by the needle.

Refuel before the needle reaches "E".

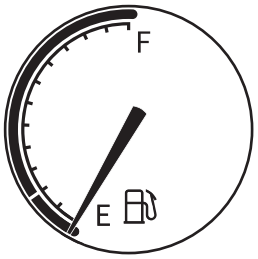

MDFY-01-047 ja

DEF Gauge (except ZX120-7 class)

The remaining DEF amount is indicated on the segment display.

When the DEF level gets low, the last segment turns yellow. If the segment turns yellow, immediately refill the DEF.

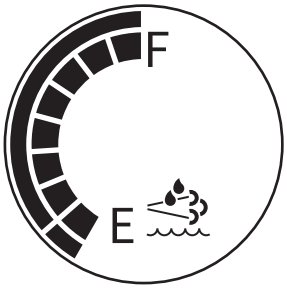

MDFY-01-048 ja

IMPORTANT

Display of the DEF gauge changes depending on the DEF level. If used with a low level of DEF, engine power is gradually reduced. If the gauge turns yellow, immediately refill the DEF.

DEF Level Alarm

Screen Display	Display of Segments	Buzzer	Description of Alarms
	The last segment turns yellow.	Once	DEF/AdBlue® level is low. Refill DEF/AdBlue® as soon as possible.
	The last segment turns red.	Intermittent sound	DEF/AdBlue® level is low. The engine output power drops gradually. Refill DEF/AdBlue® as soon as possible.
	All segments turn OFF.	Continuous sound	No DEF/AdBlue®. The engine can start, but the machine can not be operated. The machine can not be operated until refilling DEF/AdBlue®.

Coolant Temperature Gauge

The engine coolant temperature is indicated with a needle.

Normally the needle is around the center of the scale during operation.

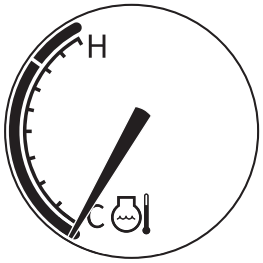

MDFY-01-049 ja

Alarm Display and Description of Alarms

Alarm Occurrence Screen

If an abnormality occurs, alarm marks (1) are displayed on the basic screen. Alarm message (6) simultaneously lights up / blinks at the bottom of the monitor screen.

Up to 8 alarm marks (1) can be displayed at any given time.

For further details about an alarm, follow the procedure below.

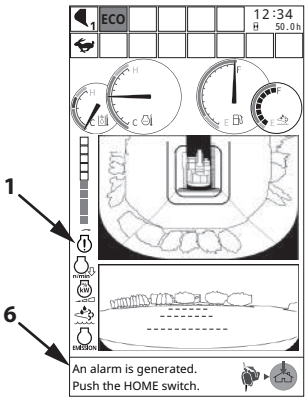

MDFY-MT-119-1 en_GB

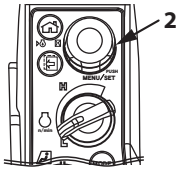

MDFY-01-094-7 ja

1. Push selector/set switch (2) on the basic screen to display main menu screen (3).
2. Rotate selector/set switch (2) to select Alarms List (4), and push selector/set switch (2).

   NOTE

   Main menu (3) displays Alarm List (4) only when an alarm occurs.

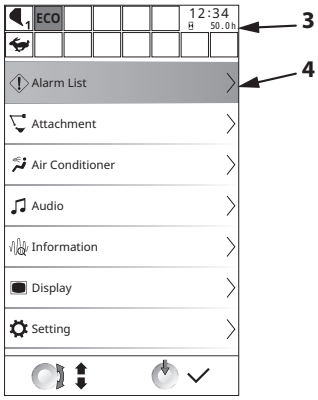

MDFY-MT-037-2 en_GB

3. Push selector/set switch (2) to display Alarms List (5). Rotate selector/set switch (2) to highlight the desired alarm, and push selector/set switch (2).

   NOTE

   Alarm List (5) contains only currently active alarms.

4. Pushing selector/set switch (2) will display detailed information of the selected alarm.

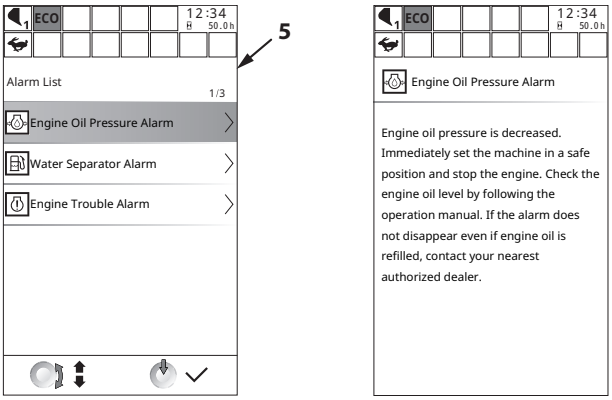

MDFY-MT-148-1 en_GB

List of Alarm Descriptions

Display	Alarm Name	Description of Alarms
	Warning Alarm	Mechanical system is abnormal. Contact your nearest authorized dealer.
STOP	Operation Stop Alarm*1	Mechanical system is abnormal. Immediately set the machine in a safe position, stop the engine and contact your authorized dealer.
	Engine Trouble Alarm*1 (Red)	Engine or engine related parts are abnormal. Immediately set the machine in a safe position, stop the engine and contact your authorized dealer.
	Engine Trouble Alarm (Yellow)	Engine or engine related parts are abnormal. Contact your nearest authorized dealer.
	Overheat Alarm*2	Coolant temperature is abnormally increasing. Stop operation. Run the engine at slow idle speed to lower the coolant temperature. Clean the radiator and front screen by following the operation manual.
	Engine Oil Pressure Alarm*1	Engine oil pressure is decreased. Immediately set the machine in a safe position and stop the engine. Check the engine oil level by following the operation manual. If the alarm does not disappear even if engine oil is refilled, contact your nearest authorized dealer.
	Air Cleaner Restriction Alarm*1	Air cleaner is clogged. Clean or replace the air cleaner element by following the operation manual.
COOLER	Inter Cooler Performance Decrease Alarm	Inter cooler performance is decreasing. Stop operation. Clean the inter cooler and front screen by following the operation manual. Check abnormality of the intake air piping such as disconnection.
	Exhaust Gas Temperature Alarm	Exhaust temperature is abnormally increasing. Stop operation. Contact your nearest authorized dealer.
INTAKE	Intake Air Temperature Alarm	Engine intake air temperature is abnormally increasing. Stop operation. Check abnormality of the intake air piping such as disconnection by referring the operation manual.
BOOST	Boost Temperature Alarm	Engine intake air temperature is abnormally increasing. Stop operation. Clean the inter cooler and front screen by following the operation manual. Check abnormality of the intake air piping such as disconnection.
EGR	EGR Gas Temperature Alarm	EGR temperature is abnormally increasing. Contact your nearest authorized dealer.
n/min	Engine Speed Restriction Status	The engine speed is restricted to protect the engine. During this time, the engine speed can not be changed.

Display	Alarm Name	Description of Alarms
	Engine Oil Level Check (Abnormal)*3	Check engine oil level and refill oil if necessary by following the operation manual.
	Engine Start Disabled (Engine Stop SW)*3	As the engine stop switch is in the “STOP” position, the engine can not be started.
	Engine Start Disabled (Pilot Shut-off Lever etc.)*3	As the pilot shut-off lever is in the “UNLOCK” position, the engine can not be started.
	Coolant Level Check (Abnormal)*3	Check coolant level and add coolant if necessary by following the operation manual.
	Preheating Operation Status*3	The glow plug is in operation.
STOP AUTO	Auto Shut-Down Abnormal Alarm	Auto-idling system is abnormal. Contact your nearest authorized dealer.
% kW	Engine Output Restriction Alarm	Engine output is limited.
n/min	Engine Output Reduction Alarm	Engine Output And Speed Are Restricted.
ESCAPE	Escape Mode Alarm*3 (for engines not using DEF/AdBlue®) (Only ZX120-7 class)	Engine output restriction is temporally suspended due to abnormality of the EGR device. Immediately contact your nearest authorized dealer.
ESCAPE	Escape Mode Alarm*3 (Except ZX120-7 class)	DEF level is low or engine output restriction is temporally suspended due to abnormality of the aftertreatment device.Immediately refill DEF or repair the aftertreatment device. If the system is abnormal, contact your nearest authorized dealer.
	Urea SCR System Abnormal Alarm (Red)*1 (Except ZX120-7 class)	Aftertreatment device is broken. Contact your nearest authorized dealer.
	Aftertreatment Device Abnormal Alarm*1(Red)	Aftertreatment device is abnormal. Immediately set the machine in a safe position, stop the engine and contact your authorized dealer.
	Aftertreatment Device Abnormal Alarm (Yellow)	Aftertreatment device is abnormal. Contact your nearest authorized dealer.
	EGR Device Failure*1	EGR device is broken. Contact your nearest authorized dealer.
	Aftertreatment Device Regeneration Request*1	Regeneration of aftertreatment device is required. Set the machine in a safe position. Pull the pilot shut-off lever to the "LOCK" position, run the engine at slow idle speed, and turn the manual regeneration switch to the REGENERATION position. For more information, refer to the operation manual.

Display	Alarm Name	Description of Alarms
	Aftertreatment Device Regeneration Inhibit Alarm	As regeneration is inhibited, can not execute regeneration. Move the machine to a safe place, release the regeneration inhibition. For more information, refer to the operation manual.
	DEF Low Level Alarm*1*3 (Except ZX120-7 class)	DEF level is low. Refill DEF by following the operation manual.
	Hydraulic System Abnormal Alarm*1 (Red)	Hydraulic system is abnormal. Immediately set the machine in a safe position, stop the engine and contact your authorized dealer.
	Hydraulic System Abnormal Alarm (Yellow)	Hydraulic system is abnormal. Contact your nearest authorized dealer.
	AFL System Abnormal Alarm*1 (Red) (Optional)	AFL system is abnormal. Immediately set the machine in a safe position, stop the engine and contact your authorized dealer.
	AFL System Abnormal Alarm (Yellow) (Optional)	AFL system is abnormal. Contact your nearest authorized dealer.
	Hydraulic Oil Overheat Alarm*1	Hydraulic oil temperature is abnormally increasing. Stop operation. Run the engine at slow idle speed to lower the hydraulic oil temperature. Clean the oil cooler and front screen, and check the hydraulic oil level and piping oil leak by following the operation manual.
	Hydraulic Oil Filter Restriction Alarm	The hydraulic oil filter is clogged. Replace the hydraulic oil filter element by following the operation manual.
	Pilot Shut-off Lever Alarm*1	Pilot shut-off lever system is abnormal. Immediately set the machine in a safe position, stop the engine and contact your authorized dealer.
	Control Lever Auto-Lock System Failure Alarm(Flashes)	The control lever auto-lock system is abnormal. There is a possibility that control lever auto-lock system will be not normally operated even when the pilot shut-off lever lock is released while the control levers, pedals, or buttons are given to move. Contact your authorized dealer.
	Control Lever Auto-Lock System Active(Lit)	There is a possibility that the pilot shut-off lever lock is released while the control levers, pedals, or buttons are given to move. Put pilot shut-off lever LOCK positon. Make sure all the control levers, pedals, or bittons are in neutral and then put pilot shut-off lever UNLOCK position.
	Alternator Alarm*1	The generated voltage of the alternator is decreasing. Check the belt driving the alternator and adjust it if necessary by following the operation manual. If the alarm does not disappear, contact your nearest authorized dealer.
	Electrical System Abnormal Alarm*1	Electrical system is abnormal. Immediately set the machine in a safe position, stop the engine and contact your authorized dealer.

Display	Alarm Name	Description of Alarms
	Water Separator Alarm*1	Water inside the fuel pre-filter exceeds the allowable amount. Drain water by following the operation manual.
	Fuel Filter Restriction Alarm	Fuel filter is clogged. Replace the fuel filter element by following the operation manual.
	Fuel Temperature Alarm	Fuel temperature is abnormally increasing. Stop operation. Clean the fuel cooler and front screen by following the operation manual.
	Fuel Level Alarm*3	Fuel level is low. Refuel by following the operation manual.
	Camera System Abnormal Alarm*1	Camera system is abnormal. Contact your nearest authorized dealer.
	Air Conditioner Abnormal Alarm	Air conditioner system is broken. Contact your nearest authorized dealer.
	System Restart Request*3	Since continuous operation exceeded 23 hours, it is necessary to re-start the system. Stop the engine once, make sure that the monitor display has disappeared, then restart the engine.
	Overload Alarm*1*3	The lifting load is excessive. The machine may rollover. Make sure the safety and lower the front attachment on the ground.
CRANE	Crane System Abnormal Alarm	Crane system is abnormal. Contact your nearest authorized dealer.
	Seat Belt Unfasten Alarm*1*3	Be sure to fasten the seat belt when operating the machine.
	Timing Belt Replacement Request(Only ZX120-7 class)	Replacement of the timing belt is required. Ask your local sales company to replace the timing belt and reset the monitor display.

NOTE

**1 The alarm is displayed and the buzzer sounds.*

**2 The alarm is displayed and the buzzer sounds. Turn engine control dial to the slow idle position and the buzzer will stop.*

**3 The alarm message displayed at bottom (6) of the monitor differs for each alarm. For the messages corresponding the various alarms, refer to the table below.*

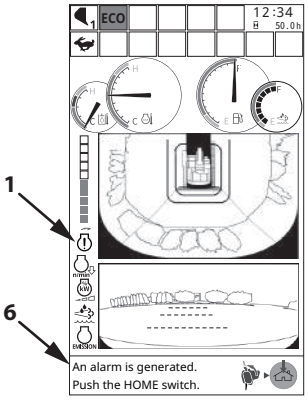

MDFY-MT-119-1 en_GB

Alarm Name	Message
Engine Oil Level Check (Abnormal)	Check Engine Oil Level And Add Oil If Required.
Engine Start Disabled (Engine Stop SW)	As the engine stop switch is in the “STOP” position, the engine can not be started.
Engine Start Disabled (Pilot Shut-off Lever etc.)	As the pilot shut-off lever is in the “UNLOCK” position, the engine can not be started.
Coolant Level Check (Abnormal)	Check coolant level and add coolant if necessary.
Preheating Operation Status	The glow plug is in operation.
Escape Mode Alarm	Suspend Has Been Set. XX min
DEF Low Level Alarm	DEF/AdBlue Level Is Low. Refill DEF/AdBlue.
Fuel Level Alarm	Fuel level is low. Refill fuel.
System Restart Request	The system have to be restarted. Push the HOME switch for detailed information.
Overload Alarm	The lifting load is excessive. The machine may rollover.
Seat Belt Unfasten Alarm	Fasten the seat belt.

Urea SCR System and EGR Device Alarm List

Display	Alarm Name	Description of Alarms
EMISSION	DEF/AdBlue® Low Level Alarm*1 (Except ZX120-7 Class)	DEF/AdBlue® level is low. Refill DEF/AdBlue®.
EMISSION % kW	DEF/AdBlue® Low Level Alarm*1 (Except ZX120-7 Class)	Not enough DEF/AdBlue®. Refill DEF/AdBlue®. The power output of the engine is restricted.
EMISSION % kW n/min	DEF/AdBlue® Low Level Alarm*1 (Except ZX120-7 Class)	DEF/AdBlue® is empty. Refill DEF/AdBlue®. The power output and speed of the engine are restricted.
EMISSION	Malfunction of Urea SCR System*1 EGR Device Fault*1	The urea SCR system or EGR device has broken down.
EMISSION % kW	Malfunction of Urea SCR System*1 EGR Device Fault*1	The urea SCR system or EGR device has broken down. The power output of the engine is restricted.
EMISSION % kW n/min	Malfunction of Urea SCR System*1 EGR Device Fault*1	The urea SCR system or EGR device has broken down. The power output and speed of the engine are restricted.

*1 Alarm mark is displayed and buzzer sounds simultaneously.

Display of Other Errors

- Fuel Sensor Error Display
  If the fuel sensor is faulty, the color of icon (2) changes from white to red and the needle disappears. If the harness between the temperature sensor and the controller unit is broken, the needle disappears.
- Coolant Temperature Sensor Error Display
  If the coolant temperature sensor is faulty, the color of icon (1) changes from white to red and the needle disappears. If the harness between the temperature sensor and the controller unit is broken, the needle disappears.

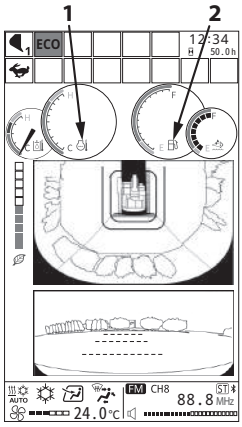

MDFY-MT-103-1 ja

- Engine Speed Control Display
  Due to a low coolant temperature, the engine is running in warm-up mode. The engine speed cannot be changed during this time.
  While the engine speed is controlled, mark (3) is displayed on the monitor. When the control completes, mark (3) goes OFF and the engine speed becomes adjustable.

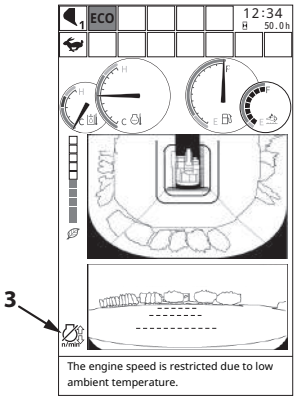

MDFY-MT-131-2 en_GB

Aftertreatment Device

Aftertreatment Device Condition Indicator

Aftertreatment device indicator (1) displays the condition of the aftertreatment device. The following explains the displayed icons and status of the machine.

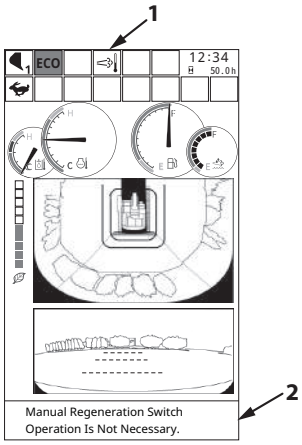

MDFY-MT-142-1 en_GB

This indicates hot exhaust gas during aftertreatment device regeneration. It lights up while auto or manual regeneration is in progress.

NOTE

- *Auto-regeneration is performed approximately 15 hours (6 hours for the ZX120-7 class, 100 hours for the ZX160-7, 180-7 class) after the previous regeneration. Auto-regeneration may start during operation of the machine; the machine may continue to be used. The engine sound and/or the machine response to the operation of control levers may change when performing auto-regeneration; this is not a malfunction.*
- *Do not stop the engine during regeneration unless absolutely necessary.*

When the manual regeneration switch is pushed during the auto-regeneration process, the message “Manual Regeneration Switch Operation is Not Necessary.” is displayed in comment section (2) at the bottom of the monitor.

Depending on the operating conditions of the machine, the regeneration may not be completed. In this case, an aftertreatment device manual regeneration request is displayed on monitor. Immediately perform manual regeneration according to the procedure.

This mark indicates that the aftertreatment device regeneration is inhibited. Regeneration is not performed while this mark is lit.

IMPORTANT

Set aftertreatment device regeneration to the inhibited position while operating the machine in an environment with materials that could be flammable. (Refer to page 1-86)

Aftertreatment Device Manual Regeneration Request

The aftertreatment device needs regeneration. Usually, regeneration is performed automatically. However, under some conditions manual regeneration is required. In such cases alarm icon (1) and operation guidance (2) will be displayed on monitor.

(Blinking, Yellow)

This mark indicates that the aftertreatment device manual regeneration is required. Perform manual regeneration by following the specified procedure.

(Blinking, Yellow)

This mark indicates that the aftertreatment device regeneration is inhibited. Displayed when the manual regeneration request arises while aftertreatment device regeneration is inhibited. Move the machine to a safe place. Following the specified procedure, release the regeneration inhibition.

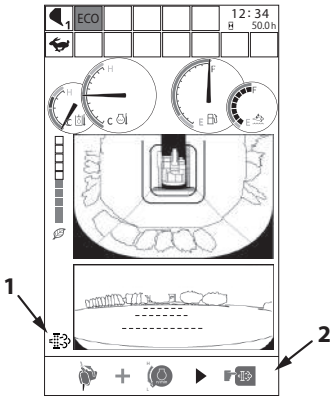

MDFY-MT-114-1 ja

IMPORTANT

- **Manual regeneration performed when the aftertreatment device regeneration request is displayed restores aftertreatment device function. This is not a malfunction.**
- **If the machine is continuously operated despite the aftertreatment device regeneration request being displayed, an engine trouble alarm will be displayed. Contact your authorized dealer.**

Manual Regeneration Procedure

When manual regeneration is necessary, alarm icon (1) and operational guidance (2) are displayed the monitor. When these appear, it is necessary to perform manual regeneration. Before starting manual regeneration, be sure to check the following.

- No one around the machine
- No flammable materials near the muffler filter
- Fuel level alarm is not lit
- DEF level alarm is not lit (except ZX120-7 class)

Procedure

1. Park the machine in a safe place. Lower the front attachment to the ground.
2. Put the pilot shut-off lever in the LOCK position.
3. Set the engine control dial to slow idle.
4. Push aftertreatment device manual regeneration switch (4).

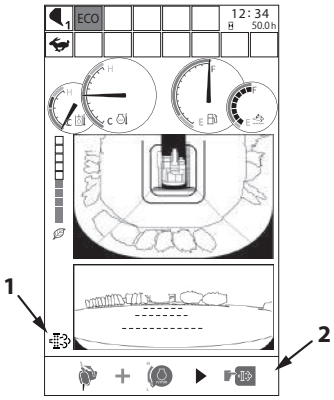

MDFY-MT-114-1 ja

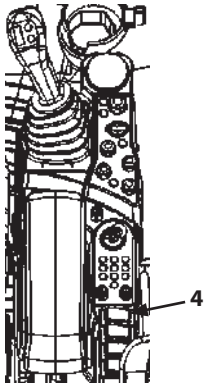

MDFY-01-001-1 ja

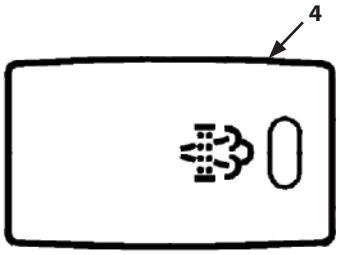

MDFY-01-118-1 ja

5. When aftertreatment device manual regeneration switch (4) is pressed, screen (3) illustrated at right is displayed and manual regeneration starts. A bar graph on screen shows the progress of the regeneration process.

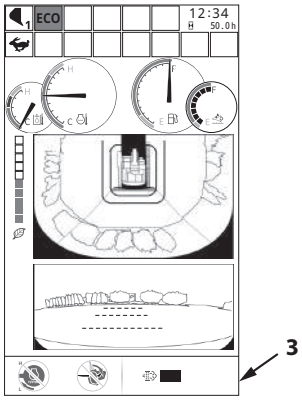

MDFY-MT-115-1 ja

IMPORTANT

Manual regeneration does not start unless the pilot shut-off lever is in the LOCK position and the engine control dial is in slow idle. If the pilot shut-off lever or the engine control dial are touched during manual regeneration, the regeneration process is aborted. If the process is aborted, start over again.

6. When manual regeneration is completed, the message "Regeneration Has Completed." is displayed. If the message "Regeneration Has Failed" is displayed, start the manual regeneration process over again. The regeneration process may fail in conditions other than those mentioned above (such as sensor malfunction or low air temperature).

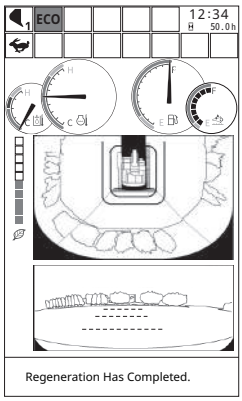

MDFY-MT-116 en_GB

NOTE

- *The engine sound may change and the engine speed may increase when manual regeneration starts. This is not a malfunction.*
- *Regeneration time varies depending on the air temperature.*
- *White smoke may come from the tail pipe temporarily during the regeneration process. This is not a malfunction.*
- *Note that the time required for manual regeneration is shorter right after the machine has been operated and longer when the engine is cold.*
- *Coolant temperature may increase during manual regeneration.*

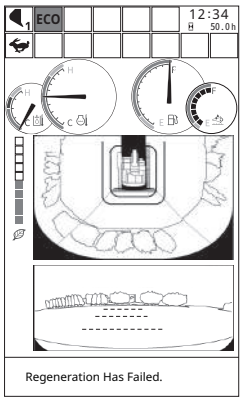

MDFY-MT-117 en_GB

IMPORTANT

- **If regeneration has to be suspended to move the machine, push the manual regeneration switch again. "Regeneration Has Failed." is displayed on the monitor, but the machine can be operated. In such cases, manual regeneration should be performed again. Restart manual regeneration as soon as possible. (Except ZX120-7 class)**
- **If regeneration has to be suspended to move a ZX120-7 class machine, turn aftertreatment device regeneration inhibition ON.**
  "Regeneration Has Failed." is displayed on the monitor, but the machine can be operated. When the aftertreatment device regeneration inhibition is OFF, auto-regeneration may start. If you wish to interrupt regeneration, refer to Aftertreatment Device Regeneration Inhibition (1-86).
  If an aftertreatment device manual regeneration request is issued, run the manual regeneration process.
- **Depending on the working and environmental conditions, the performance of the catalyst in aftertreatment device may decrease and replacement may become necessary. After warm-up is complete, manual regeneration normally takes around 25 to 40 minutes to complete. If regeneration takes over 60 minutes, contact your nearest authorized dealer to arrange an inspection.**

Engine Output Restriction Suspend

When DEF is low, a DEF SCR system or EGR device malfunction occurs, alarm mark (1) and alarm message (10) are displayed on the basic screen and engine output/ speed are limited.

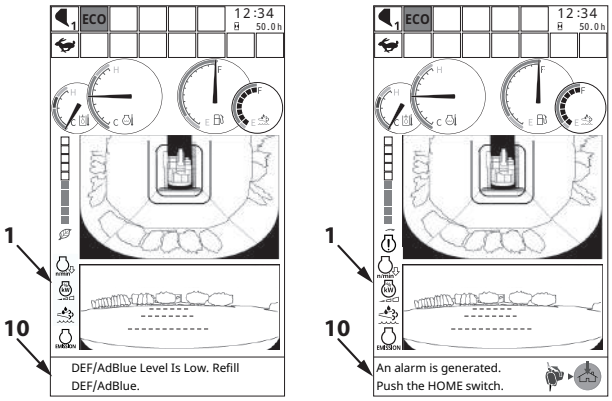

MDFY-MT-143-1 en_GB

IMPORTANT

- **The number of times this function can be used is limited; that limit varies with machine model and conditions. Check the monitor for the number of times when the limit is released.**
- **This is only a temporary release operation. Refill with DEF or repair the DEF SCR system and/or EGR equipment as soon as possible. For repairs, contact your authorized dealer.**

The engine output restriction function can be temporarily released when evacuation is unavoidable during machine operation. Follow the procedure below.

1. Push selector/set switch (2) while on the basic screen to display main menu (3).

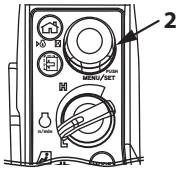

MDFY-01-094-7 ja

2. Turn selector/set switch (2) to highlight Engine Output Restriction Suspend (4).

NOTE

Engine Output Restriction Suspend (4) is displayed on Main Menu (3) only when the engine output and speed are restricted.

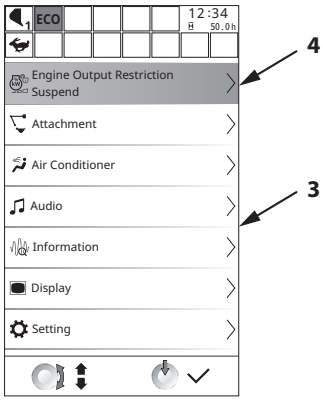

MDFY-MT-002-1 en_GB

3. Push selector/set switch (2) to display Engine Output Restriction Suspend screen (5).
4. Turn selector/set switch (2) to highlight check mark (6), and push selector/set switch (2) to display Engine Output Restriction Suspend screen (8).

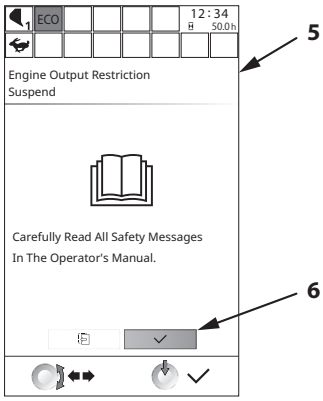

MDFY-MT-003-1 en_GB

5. Highlight check mark (7) again and press selector/set switch (2). Message (9) is displayed at the bottom of the screen and the engine output restriction is temporarily suspended.

NOTE

- *The temporary release time is a maximum of 30 minutes.*
- *The engine output restriction is enabled after 30 minutes.*

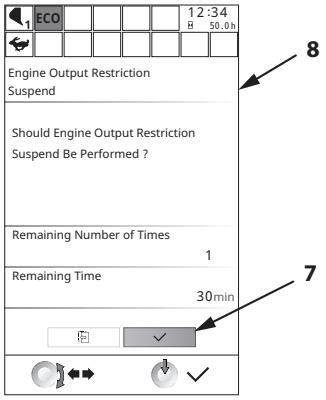

MDFY-MT-004-1 en_GB

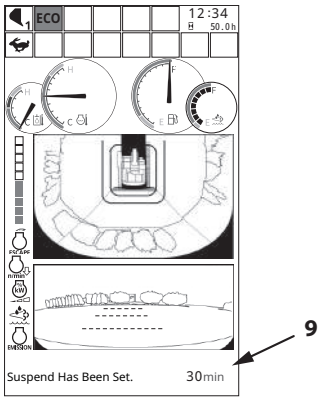

MDFY-MT-120-1 en_GB

Attachments

IMPORTANT

Before changing the attachment, stop the machine, lower the bucket or other work equipment, to the ground and set the pilot shut-off lever to the LOCK position.

To select an attachment, select Attachments from the main menu to display attachments screen (5).

Attachment Selection

1. From menu screen (3), select “Attachment” (4) and push selector/set switch (2).

   NOTE

   For how to display menu screen (3), refer to “Displaying the Main Menu”(1-15).

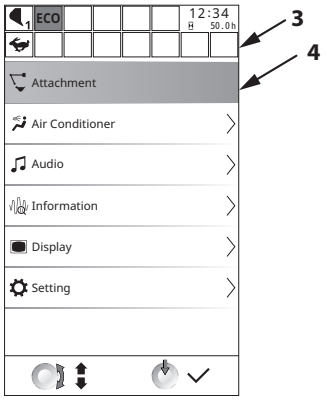

MDFY-MT-005-1 en_GB

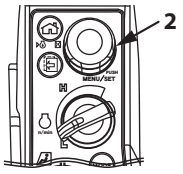

MDFY-01-094-7 ja

2. Push selector/set switch (2) to display Attachment screen (5).
3. Rotate selector/set switch (2) so that the attachment to be selected appears in the middle of the screen.

   NOTE

   In the illustration on the right, Bucket 1 (6) is highlighted.

4. Push selector/set switch (2) to make the change.

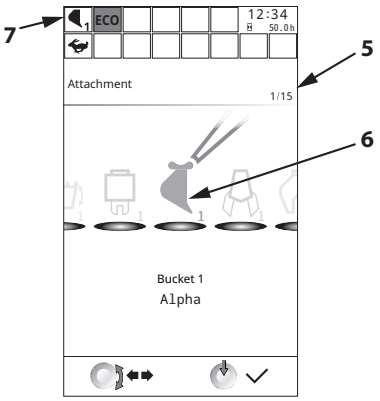

MDFY-MT-043-1 en_GB

   NOTE

   When the attachment pedal is operated while the bucket 1 is selected, Attachment display (7) on the monitor screen will start blinking.
   This icon blinks in the case that the control lever or pedal being operated does not match the selected attachment.

Attachment Adjustment

In attachment adjustment, the following adjustments can be made.

- Pump flow rate for the attachment
- Priority for arm roll-out or arm roll-in during compound operations involving an attachment
- Priority for boom raise speed during compound operations involving the boom
- Adjustment of front speed adjustment for heavy loads
- Boom Raise Speed Priority
- Priority (Swing-Arm Roll-Out)
- Priority (Swing-Arm Roll-In)
- Attachment Operation Sensitivity Adjustment

Attachment adjustments can be made when the attachment mode is set to an attachment other than bucket.
Change to the attachment that is to be adjusted.
For how do do this refer to “Attachment Selection” (1-35).

Pump Flow Rate Adjustment

1. From Attachment screen (5), select attachment other than Bucket.

   NOTE

   - *For how to select attachments, refer to “Attachment Selection” (1-35).*
   - *In the illustration to the right, Crusher 1 (6) has been selected.*

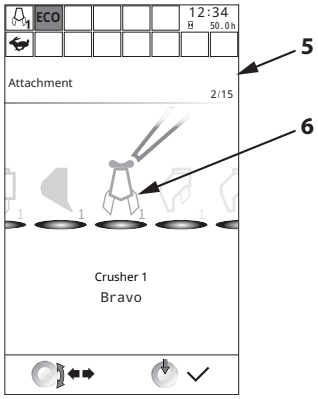

MDFY-MT-044-1 en_GB

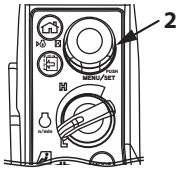

MDFY-01-094-7 ja

2. Make sure that the currently set attachment has been selected, and push selector/set switch (2). Confirmation screen (7) will be displayed.
3. Rotate selector/set switch (2) to highlight (8).

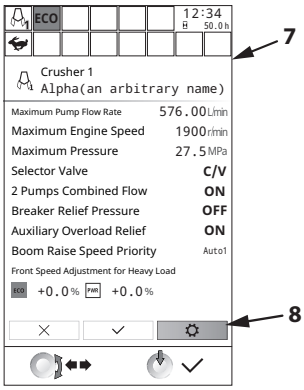

MDFY-MT-045-1 en_GB

4. Push selector/set switch (2) to display setting screen (9).
5. Rotate selector/set switch (2) to highlight Pump Flow Rate (10).

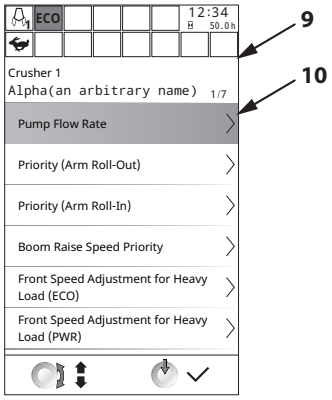

MDFY-MT-157-1 en_GB

6. Push selector/set switch (2) to display Pump Flow Rate screen (11).
7. Rotate selector/set switch (2) clockwise or counterclockwise to adjust the pump flow rate. As selector/set switch (2) is rotated, the arc-like bar and the value in the middle of screen will change.
8. Push selector/set switch (2) to set the flow rate.

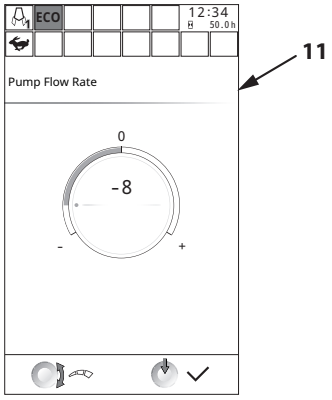

MDFY-MT-165-1 en_GB

Priority (Arm Roll-In)

1. From Attachment screen (5), select an attachment other than Bucket.

   NOTE

   - *For how to select attachments, refer to "Attachment Selection" (1-35).*
   - *In the illustration to the right, Crusher 1 (6) has been selected.*
   - *Effectiveness varies with model, machine specifications and work mode.*

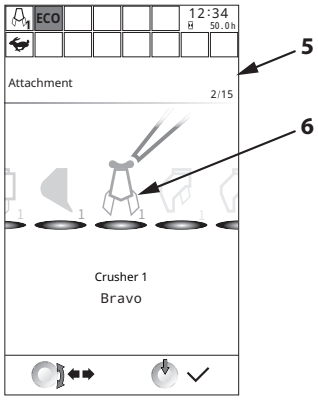

MDFY-MT-044-1 en_GB

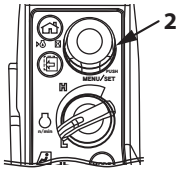

MDFY-01-094-7 ja

2. Make sure that the currently set attachment has been selected, and push selector/set switch (2). Confirmation screen (7) will be displayed.
3. Rotate selector/set switch (2) to highlight (8).

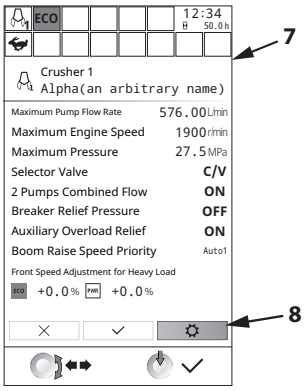

MDFY-MT-045-1 en_GB

4. Push selector/set switch (2) to display setting screen (9).
5. Rotate selector/set switch (2) to highlight Priority (Arm Roll-In) (10).

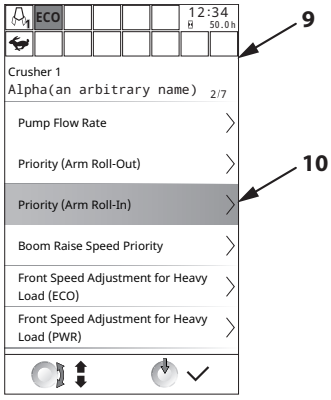

MDFY-MT-158-1 en_GB

6. Push selector/set switch (2) to display adjustment screen (11).
7. Rotate selector/set switch (2) clockwise or counterclockwise to adjust priority.
   On the bar at the bottom of the screen, the left side indicates arm roll-in priority and the right side attachment priority.
   Priority is adjusted by moving arrow initially positioned at the center bar. The direction and amount movement (orange) of the arrow determine the priority.

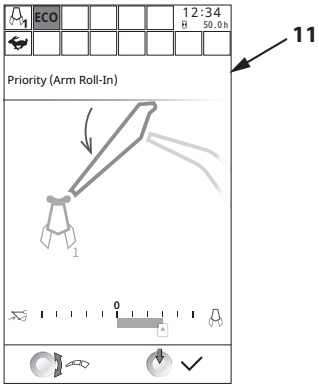

MDFY-MT-049-1 en_GB

8. Push selector/set switch (2) to enable the change.

Priority (Arm Roll-Out) (Except ZX330-7 Class)

1. From Attachment screen (5), select an attachment other than Bucket.

   NOTE

   - *For how to select attachments, refer to "Attachment Selection" (1-35).*
   - *In the illustration to the right, Crusher 1 (6) has been selected.*
   - *Effectiveness varies with model, machine specifications and work mode.*

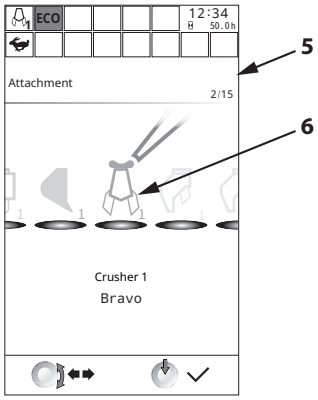

MDFY-MT-044-1 en_GB

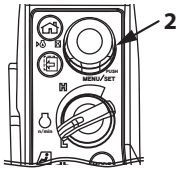

MDFY-01-094-7 ja

2. Make sure that the currently set attachment has been selected, and push selector/set switch (2). Confirmation screen (7) will be displayed.
3. Rotate selector/set switch (2) to highlight (8).

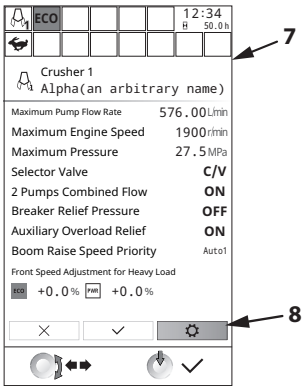

MDFY-MT-045-1 en_GB

4. Push selector/set switch (2) to display setting screen (9).
5. Rotate selector/set switch (2) to highlight Priority (Arm Roll-Out) (10).

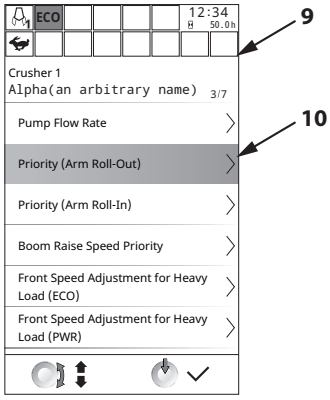

MDFY-MT-159-1 en_GB

6. Push selector/set switch (2) to display adjustment screen (11).
7. Rotate selector/set switch (2) clockwise or counterclockwise to adjust priority.
   On the bar at the bottom of the screen, the left side indicates arm roll-out priority and the right side attachment priority.
   Priority is adjusted by moving arrow initially positioned at the center bar. The direction and amount movement (orange) of the arrow determine the priority.
8. Push selector/set switch (2) to enable the change.

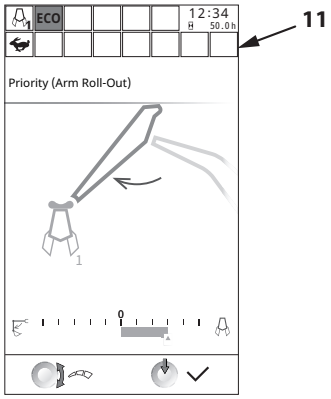

MDFY-MT-051-1 en_GB

Boom Raise Speed Priority (except ZX120-7, 160-7, 180-7 class)

1. From Attachment screen (5), select an attachment other than Bucket.

   NOTE

   - *For how to select attachments, refer to "Attachment Selection"(1-35).*
   - *In the illustration to the right, Crusher 1 (6) has been selected.*

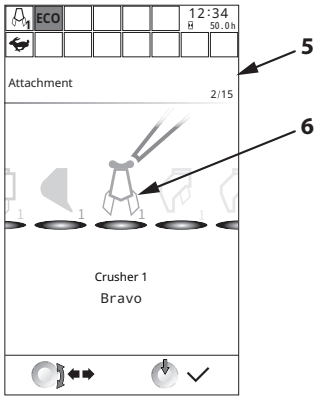

MDFY-MT-044-1 en_GB

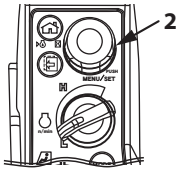

MDFY-01-094-7 ja

2. Make sure that the currently set attachment has been selected, and push selector/set switch (2). Confirmation screen (7) will be displayed.
3. Rotate selector/set switch (2) to highlight (8).

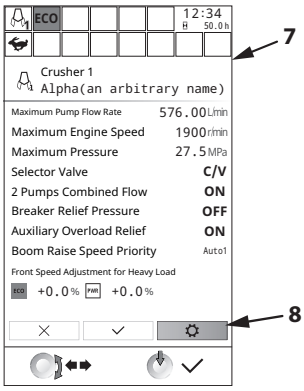

MDFY-MT-045-1 en_GB

4. Push selector/set switch (2) to display setting screen (9).
5. Rotate selector/set switch (2) to highlight Boom Raise Speed Priority (10).

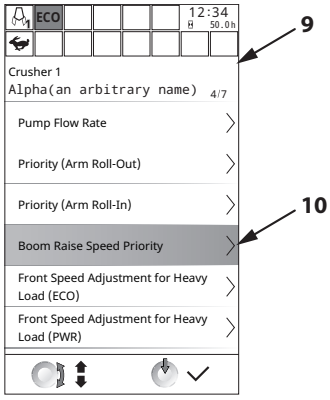

MDFY-MT-160-1 en_GB

6. Push selector/set switch (2) to display setting screen (11).
7. Rotate selector/set switch (2) right or left to highlight the mode you wish to select.
   For details on the various modes, refer to “Attachment Settings” in Chapter 5 “OPERATING THE MACHINE".
8. Push selector/set switch (2) to enable the change.
   When the setting is confirmed, a black square will appear in the checkbox to right of the mode name.

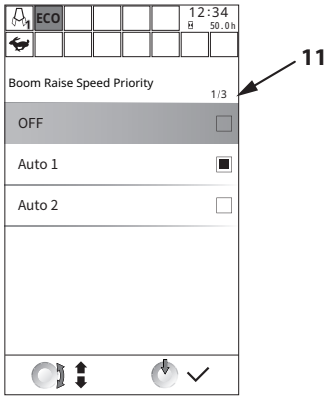

MDFY-MT-053-1 en_GB

Priority (Swing- Arm Roll-Out) (Except ZX200-7, 240-7, 300-7, 330-7 class)

1. From attachment screen (5), select an attachment other than bucket.

   NOTE

   - *For how to select attachments, refer to Attachment Selection (1-35).*
   - *In the illustration at right, Crusher 1 (6) has been selected.*

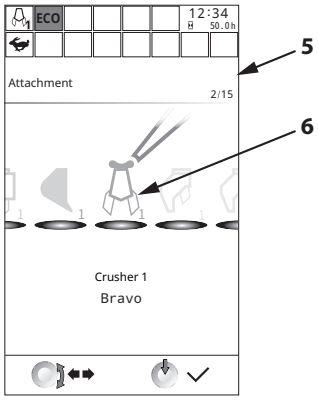

MDFY-MT-044-1 en_GB

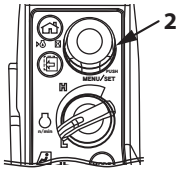

MDFY-01-094-7 ja

2. Make sure that the currently set attachment has been selected, and push selector/set switch (2). Confirmation screen (7) is displayed.
3. Rotate selector/set switch (2) to highlight ON (8).

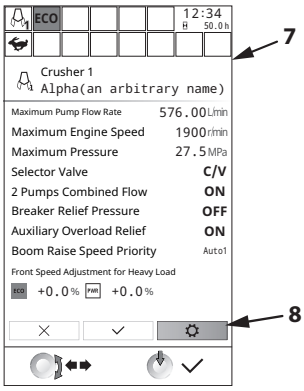

MDFY-MT-045-1 en_GB

4. Push selector/set switch (2) to display setting screen (9).
5. Turn selector/set switch (2) to highlight Priority (Swing Arm Roll-Out) (10).

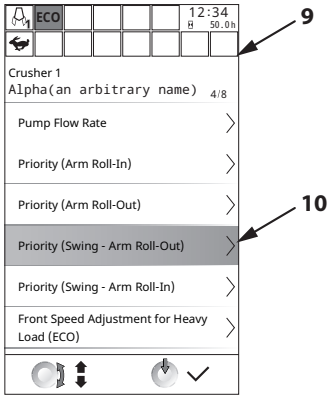

MLAF-MT-071-1 en_GB

6. Push selector/set switch (2) to display adjustment screen (11).
7. Turn selector/set switch (2) to adjust priority.
   On the bar at the bottom of the screen, the left side indicates arm roll-out priority and the right side swing priority.
   The direction and amount the arrow is moved (orange) determine the priority.

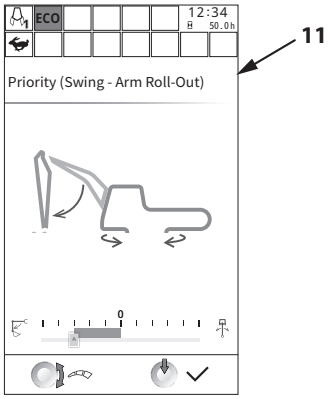

MLAF-MT-079-1 en_GB

8. Push selector/set switch (2) to make the change.

Priority (Swing-Arm Roll-In) (Except ZX200-7, 240-7, 300-7, 330-7 class)

1. From attachment screen (5), select an attachment other than bucket.

   NOTE

   - *For how to select attachments, refer to Attachment Selection (1-35).*
   - *In the illustration at right, Crusher 1 (6) has been selected.*

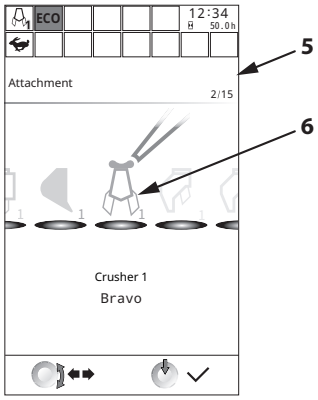

MDFY-MT-044-1 en_GB

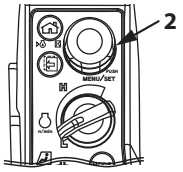

MDFY-01-094-7 ja

2. Make sure that the currently set attachment has been selected, and push selector/set switch (2). Confirmation screen (7) is displayed.
3. Rotate selector/set switch (2) to highlight ON (8).

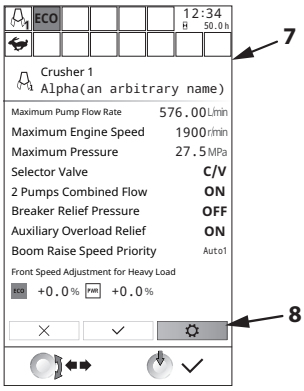

MDFY-MT-045-1 en_GB

4. Push selector/set switch (2) to display setting screen (9).
5. Turn selector/set switch (2) to highlight Priority (Swing Arm Roll-In) (10).

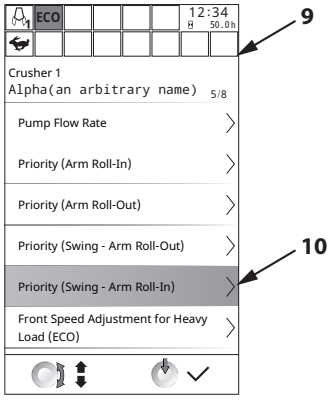

MLAF-MT-072-1 en_GB

6. Push selector/set switch (2) to display adjustment screen (11).
7. Turn selector/set switch (2) to adjust priority.
   On the bar at the bottom of the screen, the left side indicates arm roll-in priority and the right side swing priority.
   The direction and amount the arrow is moved (orange) determine the priority.
8. Push selector/set switch (2) to make the change.

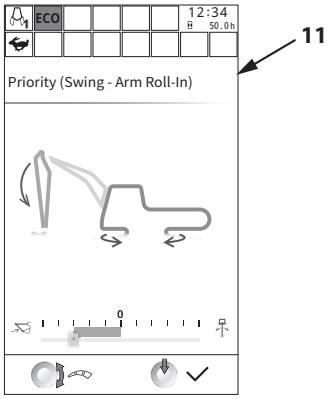

MLAF-MT-078-1 en_GB

Front Speed Adjustment for Heavy Load (ECO)(PWR)(H/P)

IMPORTANT

The setting procedure for the Front Speed Adjustment for Heavy Load modes (ECO), (PWR) and (H/P) is the same.
Here, the setting procedure is described taking the Front Speed Adjustment for Heavy Load (ECO) screen as an example.

1. From Attachment screen (5), select an attachment other than Bucket.

   NOTE

   - For how to select attachments, refer to Attachment Selection(1-35).
   - In the illustration to the right, Crusher 1 (6) has been selected.

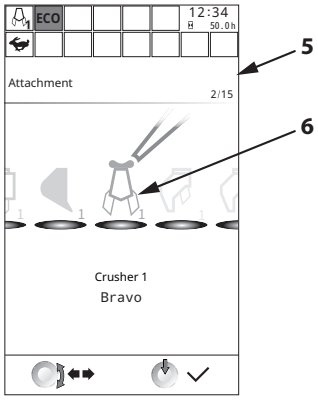

MDFY-MT-044-1 en_GB

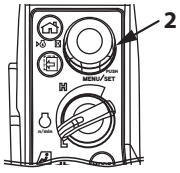

MDFY-01-094-7 ja

2. Make sure that the currently set attachment has been selected, and push selector/set switch (2). Confirmation screen (7) will be displayed.
3. Rotate selector/set switch (2) to highlight (8).

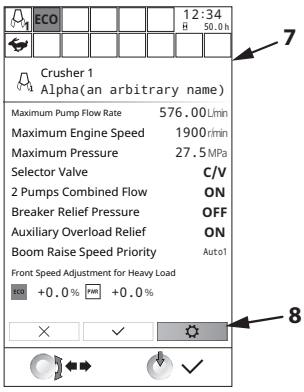

MDFY-MT-045-1 en_GB

4. Push selector/set switch (2) to display setting screen (9).
5. Rotate selector/set switch (2) to highlight Front Speed Adjustment for Heavy Load (ECO) (10).

   ## IMPORTANT

   When making a front speed adjustment for heavy load in PWR or H/P mode, select Front Speed Adjustment for Heavy Load (PWR) (11) or (H/P).

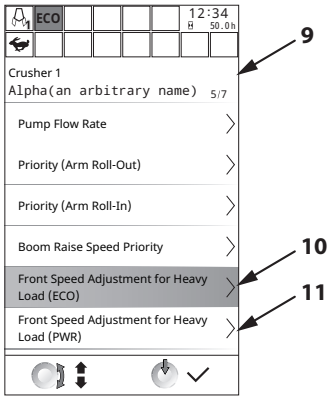

MDFY-MT-161-1 en_GB

6. Push selector/set switch (2) to display setting screen (12).
7. Rotate selector/set switch (2) left or right to adjust the speed of the front attachment at high loads.
   As selector/set switch (2) is rotated, the arc-like bar and value in the middle will change.
   [- side]
   The pump driving torque at high loads is reduced.
   The pump discharge flow rate is reduced, reducing the speed of the front attachment.
   [+ side]
   The pump driving torque at high loads is increased.
   The pump discharge flow rate is increased, increasing the speed of the front attachment.
8. Push selector/set switch (2) to enable the change.

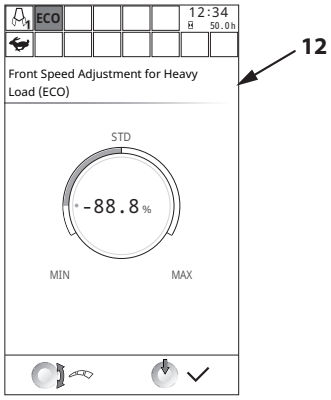

MDFY-MT-055-1 en_GB

Attachment Operation Sensitivity Adjustment (Except ZX160-7, 180-7, 200-7, 240-7, 300-7, 330-7 class)

1. From attachment screen (5), select an attachment other than bucket.

   NOTE

   - *For how to select attachments, refer to Attachment Selection (1-35).*
   - *In the illustration at right, Crusher 1 (6) has been selected.*

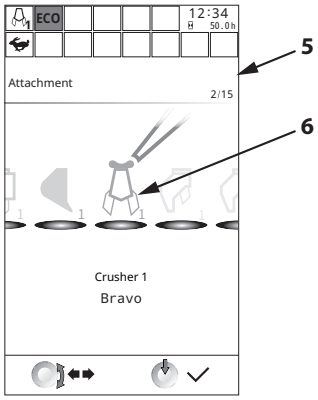

MDFY-MT-044-1 en_GB

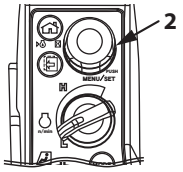

MDFY-01-094-7 ja

2. Make sure that the currently set attachment has been selected, and push selector/set switch (2). Confirmation screen (7) is displayed.
3. Rotate selector/set switch (2) to highlight ON (8).

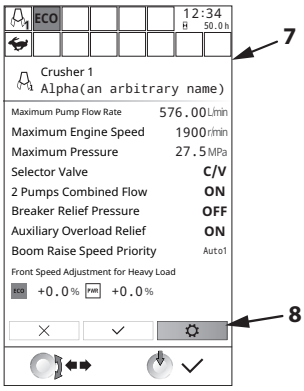

MDFY-MT-045-1 en_GB

4. Push selector/set switch (2) to display setting screen (9).
5. Rotate selector/set switch (2) to highlight Attachment Operation Sensitivity Adjustment (10).

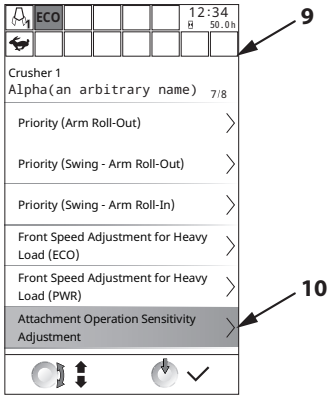

MLAF-MT-075-1 en_GB

6. Push selector/set switch (2) to display Attachment Operation Sensitivity Adjustment screen (11).
7. Rotate selector/set switch (2) to adjust the attachment operation sensitivity.
   As selector/set switch (2) is rotated, the arc-like bar and the value in the middle of screen change.
   Rotating the switch to the right stiffens the feel when operating the attachment.
   Rotating the switch to the left loosens the feel when operating the attachment.
8. Push selector/set switch (2) to set the attachment operation sensitivity.

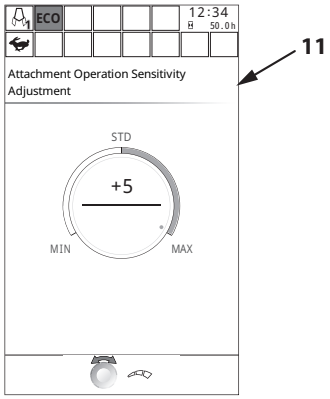

MLAF-MT-076-1 en_GB

Information

The information screen includes the following items.

- Operation Information
- Maintenance
- Troubleshooting
- Monitoring
- Inspect Machine Daily Before Starting

Procedure for Displaying Information Screen

1. From menu screen (3), highlight “Information” (4) and push selector/set switch (2).

   NOTE

   For how to display menu screen (3), refer to “Operating the Main Menu” (1-15).

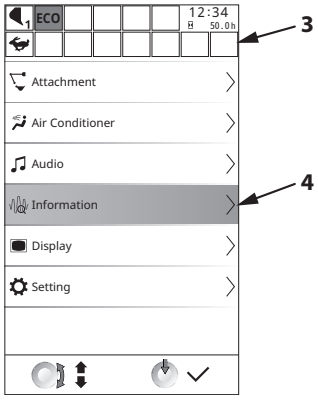

MDFY-MT-029-1 en_GB

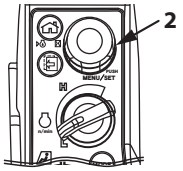

MDFY-01-094-7 ja

2. Push selector/set switch (2) to display Information screen (5).
3. Rotate selector/set switch (2) to highlight the item you wish to set.
4. Push selector/set switch (2) to display the corresponding screen.

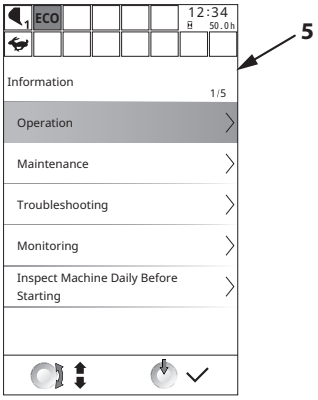

MDFY-MT-030-1 en_GB

Operation Information

In the operation Information, information about the following items can be confirmed.

IMPORTANT

Total fuel consumption and the fuel consumption rate depend on the operating environment and the operation method of the machine.
The values shown on the screen are for reference only.
Differences may arise between the actual fuel consumption and the fuel consumption displayed on the multi-function monitor.

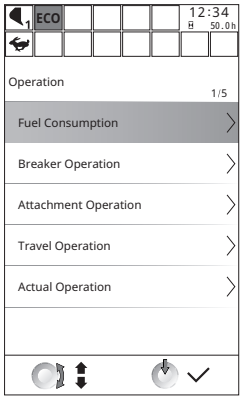

MDFY-MT-031 en_GB

- Fuel Consumption
  Displays machine operation hours, fuel consumption, and average fuel consumption rate since last reset.
- Breaker Operation
  Displays breaker operation hours, machine operation hours, and operation ratio since last reset.
- Attachment Operation
  Displays attachment operation hours since last reset.
- Travel Operation
  Displays travel operation hours since last reset.
- Actual Operation
  Displays total hours of operation (front attachment, travel) since last reset.

NOTE

The reset operations for these pieces of informations are performed the from the corresponding information display screens.
Please confirm the display screens for each each of the above.

Fuel Consumption

1. From Information screen (5), highlight “Operation” (6) and push selector/set switch (2).

   NOTE

   For how to display information screen (5), refer to “Information” (1-52).

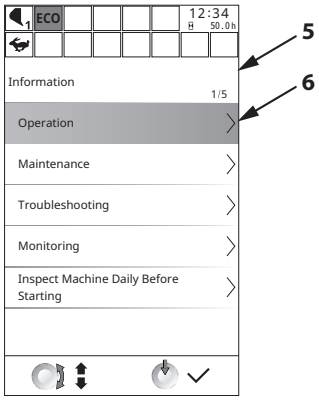

MDFY-MT-030-2 en_GB

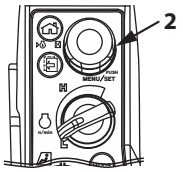

MDFY-01-094-7 ja

2. Push selector/set switch (2) to display “Operation” screen (7).
3. Rotate selector/set switch (2) to highlight “Fuel Consumption” (8).

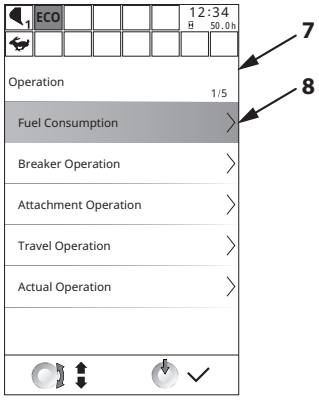

MDFY-MT-031-1 en_GB

4. Push selector/set switch (2) to display “Fuel Consumption” screen (9).
   Confirm the display information.
5. To reset the display information, rotate selector/set switch (2) to highlight “CLEAR”.
   Then push selector/set switch (2) to reset.

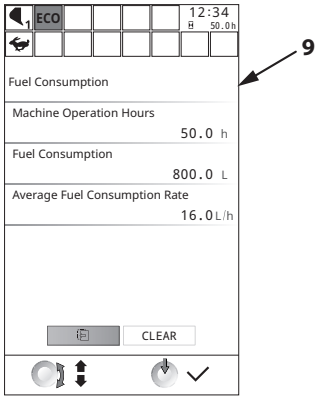

MDFY-MT-032-1 en_GB

Breaker Operation

1. From Information screen (5), highlight "Operation" (6) and push selector/set switch (2).

   NOTE

   For how to display information screen (5), refer to "Information" (1-52).

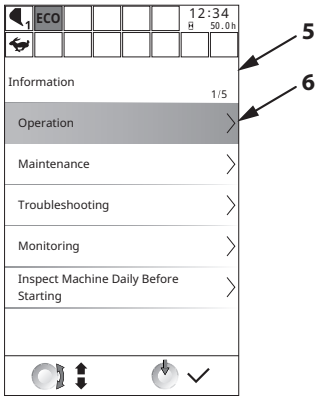

MDFY-MT-030-2 en_GB

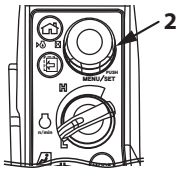

MDFY-01-094-7 ja

2. Push selector/set switch (2) to display "Operation" screen (7).
3. Rotate selector/set switch (2) to highlight Breaker Operation (8).

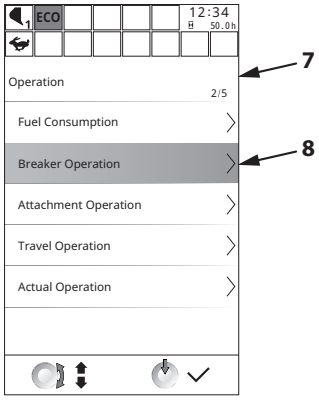

MDFY-MT-070-1 en_GB

4. Push selector/set switch (2) to display "Breaker Operation" screen (9).
   Confirm the display information.
5. To reset the display information, rotate selector/set switch (2) to highlight "CLEAR".
   Then push selector/set switch (2) to reset.

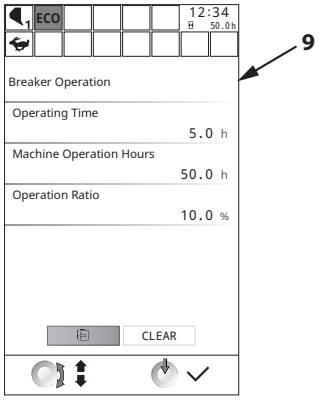

MDFY-MT-033-1 en_GB

Attachment Operation

1. From Information screen (5), highlight “Operation” (6) and push selector/set switch (2).

   NOTE

   For how to display information screen (5), refer to “Information”(1-52).

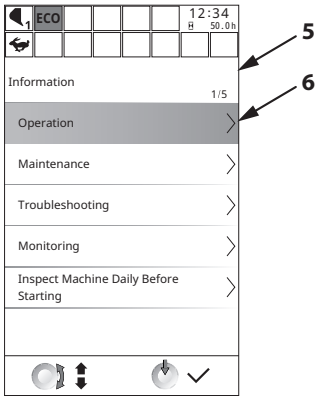

MDFY-MT-030-2 en_GB

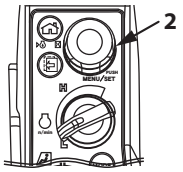

MDFY-01-094-7 ja

2. Push selector/set switch (2) to display “Operation” screen (7).
3. Rotate selector/set switch (2) to highlight “Attachment Operation” (8).

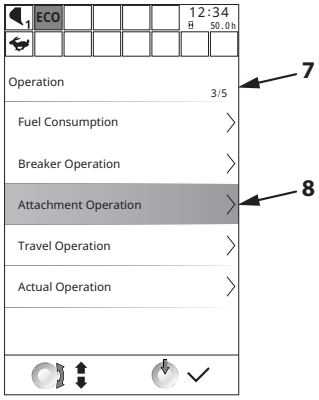

MDFY-MT-071-1 en_GB

4. Push selector/set switch (2) to display “Attachment Operation” screen (9).
   Confirm the display information.
5. To reset the display information, rotate selector/set switch (2) to highlight “CLEAR”.
   Then push selector/set switch (2) to reset.

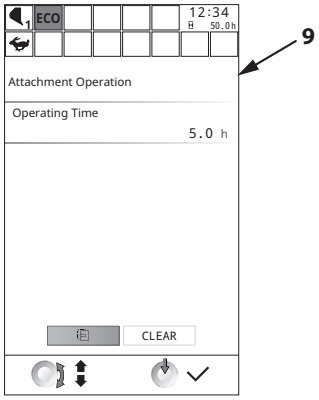

MDFY-MT-034-1 en_GB

Travel Operation

1. From Information screen (5), highlight “Operation” (6) and push selector/set switch (2).

   NOTE

   For how to display information screen (5), refer to “Information” (1-52).

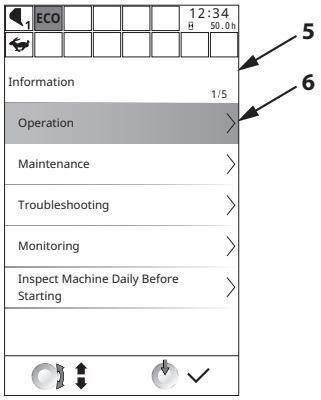

MDFY-MT-030-2 en_GB

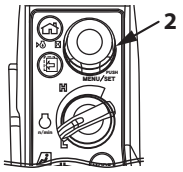

MDFY-01-094-7 ja

2. Push selector/set switch (2) to display “Operation” screen (7).
3. Rotate selector/set switch (2) to highlight “Travel Operation” (8).

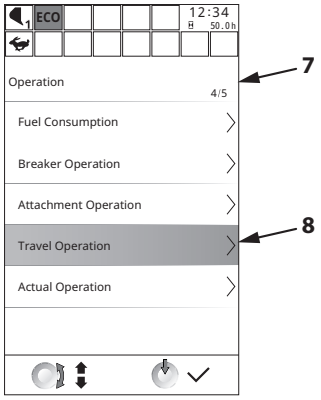

MDFY-MT-072-1 en_GB

4. Push selector/set switch (2) to display “Travel Operation” screen (9).
   Confirm the display information.
5. To reset the display information, rotate selector/set switch (2) to highlight “CLEAR”.
   Then push selector/set switch (2) to reset.

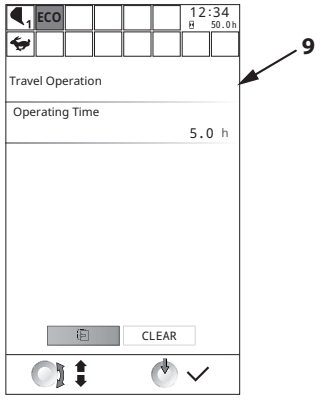

MDFY-MT-035-1 en_GB

Actual Operation

1. From Information screen (5), highlight “Operation” (6) and push selector/set switch (2).

   NOTE

   For how to display information screen (5), refer to “Information” (1-52).

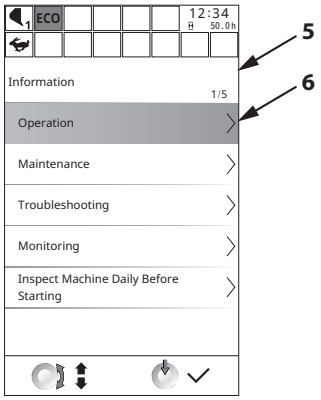

MDFY-MT-030-2 en_GB

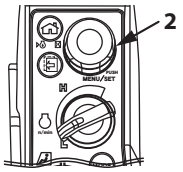

MDFY-01-094-7 ja

2. Push selector/set switch (2) to display “Operation” screen (7).
3. Rotate selector/set switch (2) to highlight “Actual Operation” (8).

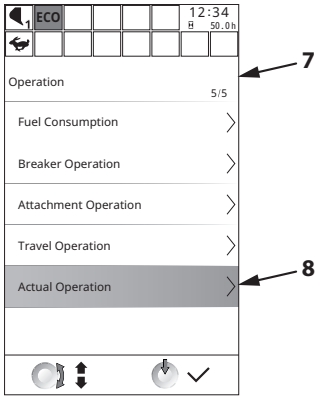

MDFY-MT-073-1 en_GB

4. Push selector/set switch (2) to display “Actual Operation” screen (9).
   Confirm the display information.
5. To reset the display information, rotate selector/set switch (2) to highlight “CLEAR”.
   Then push selector/set switch (2) to reset.

   NOTE

   The actual operating time includes travel operation hours as well as all other operations.

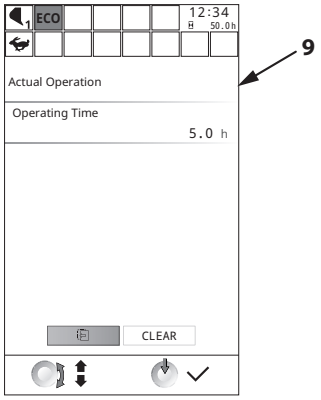

MDFY-MT-036-1 en_GB

Maintenance Notice

The maintenance screen includes maintenance notification, remaining time until next maintenance, and maintenance interval.
The maintenance items that can be set are as follows.

- Engine Oil
- Engine Oil Filter
- Hydraulic Oil
- Hydraulic Oil Pilot Filter
- Hydraulic Oil Full-Flow Filter
- Pump Transmission Oil (except ZX120-7 class)
- Travel Device Oil
- Swing Device Oil
- Swing Bearing Grease
- Air Cleaner Filter
- Fuel Filter
- Air Conditioner Filter
- Muffler Filter
- DEF Supply Module Main Filter (except ZX120-7 class)
- DEF Water Supply Inlet Filter (except ZX120-7 class)
- Oil Separator Element (ZX120-7, 160-7, 180-7 class only)
- Timing Belt (Only ZX120-7 class)
- User Setting 1
- User Setting 2

Maintenance Notice

1. From information screen (5), highlight "Maintenance" (6) and push selector/set switch (2).

   NOTE

   For how to display information screen (5), refer to "Information" (1-52).

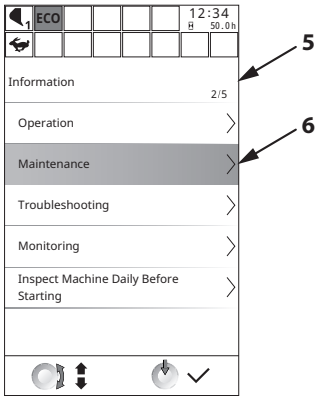

MDFY-MT-038-1 en_GB

2. Push selector/set switch (2) to display "Maintenance" screen (7).
3. Rotate selector/set switch (2) to highlight "Maintenance Notice" (8).
4. Push selector/set switch (2) to turn the notice function ON. It is turned OFF by pushing it again.
   [ON]
   When the replacement interval is reached, an infomation message is displayed on the screen.
   [OFF]
   No notification message is displayed.

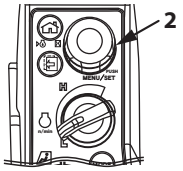

MDFY-01-094-7 ja

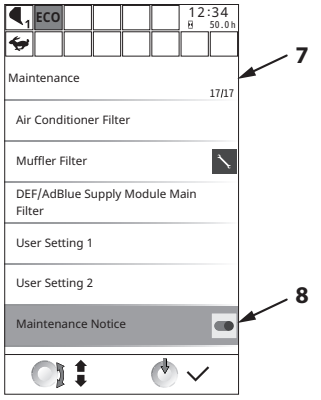

MDFY-MT-141-1 en_GB

NOTE

Once the set interval for an item is reached, message (9) is displayed for 10 seconds when the key is switched ON. Push the back switch to delete the notification. When checking the maintenance items from the menu, items where the set time has been reached are marked with a wrench (10).

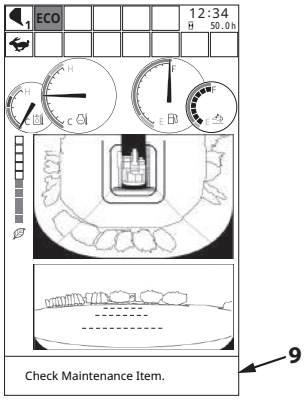

MDFY-MT-123-2 en_GB

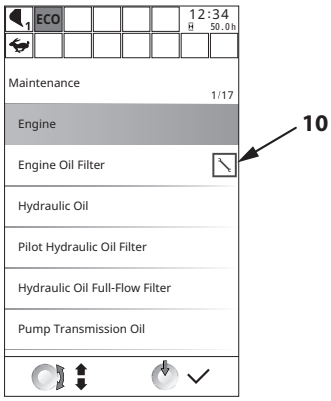

MDFY-MT-039-1 en_GB

Remaining Time and Maintenance Interval

1. From Information screen (5), highlight "Maintenance" (6) and push selector/set switch (2).

   NOTE

   For how to display information screen (5), refer to "Information" (1-52).

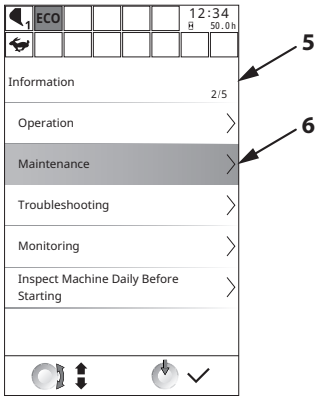

MDFY-MT-038-1 en_GB

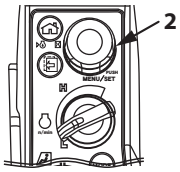

MDFY-01-094-7 ja

2. Push selector/set switch (2) to display "Maintenance (list)" screen (7).
3. Rotate selector/set switch (2) to highlight an item to be checked (8).
   (In this example, Engine Oil is selected.)

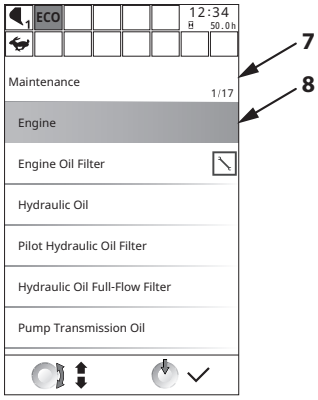

MDFY-MT-039-2 en_GB

4. Push selector/set switch (2) to display the time remaining for the selected maintenance item.
5. To reset the display information, rotate selector/set switch (2) to highlight "RESET" (9).
   Then push selector/set switch (2) to reset.
   The value of the remaining time is reset to the maintenance interval, and the previous maintenance date is updated to the current date.

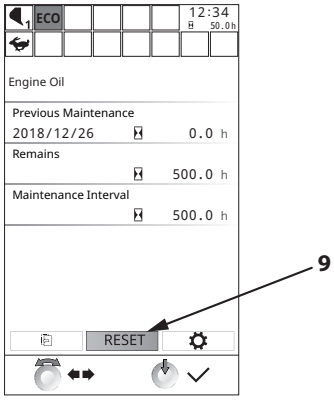

MDFY-MT-040-1 en_GB

6. To change the maintenance interval, rotate selector/set switch (2) to highlight (11) with the cursor, and push selector/set switch (2).
   The background color of Maintenance Interval (10) changes, then rotate selector/set switch (2) to adjust the time, and then push selector/set switch (2) to enable the change.

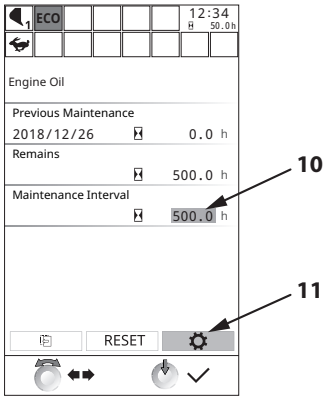

MDFY-MT-085-1 en_GB

Troubleshooting

This screen displays the fault code recorded in the controller connected to CAN (Controller Area Network).

IMPORTANT

In the event that fault code is displayed, contact your authorized dealer without delay.

1. From Information screen (5), highlight "Troubleshooting" (6) and push selector/set switch (2).

   NOTE

   For how to display Information screen (5), refer to "Information" (1-52).

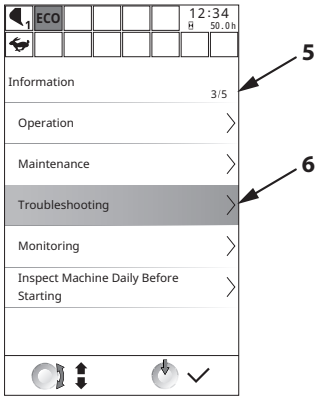

MDFY-MT-124-1 en_GB

2. Push selector/set switch (2) to display Troubleshooting screen (7).
3. The currently generated fault codes are displayed to the right of each item. Rotate selector/set switch (2) to highlight the item for which the fault code is displayed.
4. Press selector/set switch (2) to display the currently generated fault codes (8).

   NOTE

   A maximum of 30 fault codes can be displayed.

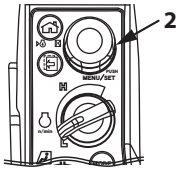

MDFY-01-094-7 ja

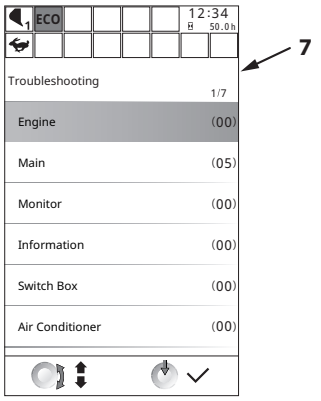

MDFY-MT-162-1 en_GB

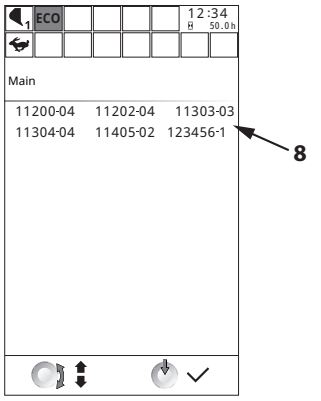

MDFY-MT-126-1 en_GB

Monitoring

The current communication status (reception level) can be checked.

1. From Information screen (5), highlight “Monitoring” (6) and press selector/set switch (2).

   NOTE

   For how to display information screen (5), refer to “Information” (1-52).

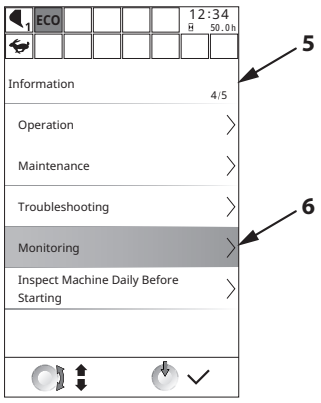

MDFY-MT-041-1 en_GB

2. Push selector/set switch (2) to display “Monitoring” screen (7).
   The strength of the reception is indicated by an icon.

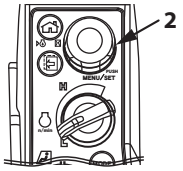

MDFY-01-094-7 ja

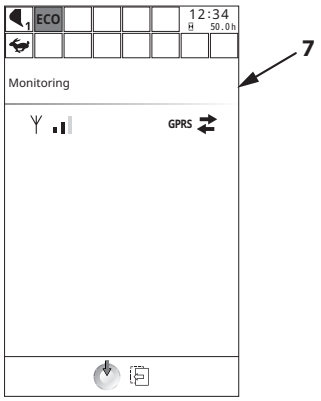

MDFY-MT-042-1 en_GB

Inspect Machine Daily Before Starting

Inspect Machine Daily Before Starting displays items to be inspected every day before starting work.

1. From Information screen (5), highlight "Inspect Machine Daily Before Starting" (6) and push selector/set switch (2).

   NOTE

   For how to display information screen (5), refer to "Information" (1-52).

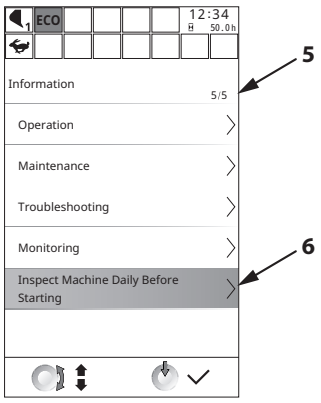

MDFY-MT-127-1 en_GB

2. Push selector/set switch (2) to display "Inspect Machine Daily Before Starting" screen (7). The items (8) of each part of the machine which should be check before starting work are displayed.
   The displayed inspection items are intended to assist the inspection before starting and are not exhaustive.
   For details refer to the "Maintenance Guide" in chapter 7, Inspection and Maintenance.

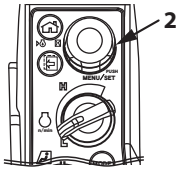

MDFY-01-094-7 ja

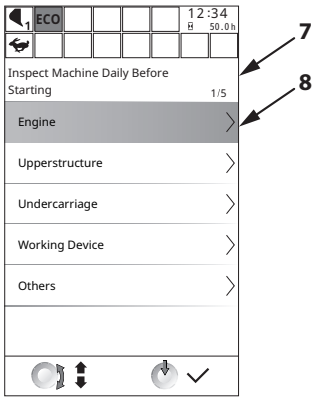

MDFY-MT-128-1 en_GB

Display

On the display screen, the following settings can be changed.

- Date and Time
- Brightness Adjustment
- Language
- Unit Selection

Procedure for Displaying the Display Screen

1. From menu screen (3), highlight Display (4) and push selector/set switch (2).

   NOTE

   For how to display menu screen (3), refer to "Operating the Main Menu" (1-15)

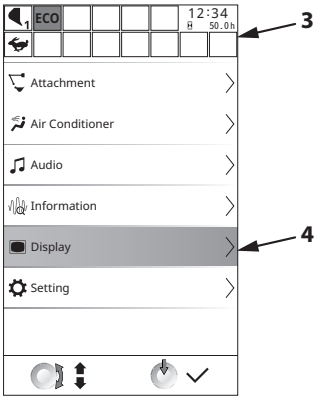

MDFY-MT-069-1 en_GB

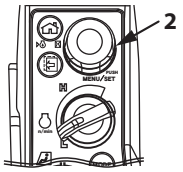

MDFY-01-094-7 ja

2. Push selector/set switch (2) to open "Display" screen (5).
3. Rotate selector/set switch (2) to highlight the item you wish to set.
4. Push selector/set switch (2) to display the corresponding screen.

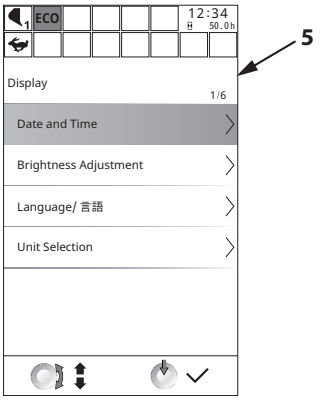

MDFY-MT-017-1 en_GB

Date and Time

Time, date and display mode can be set on this screen. Year-month-day format and 24h/12h display mode can be selected in the display setting.

Time Adjustment Procedure

1. From display screen (5), highlight “Date and Time” and push selector/set switch (2).

   NOTE

   For how to go to display screen (5), refer to “Display” (1-67).

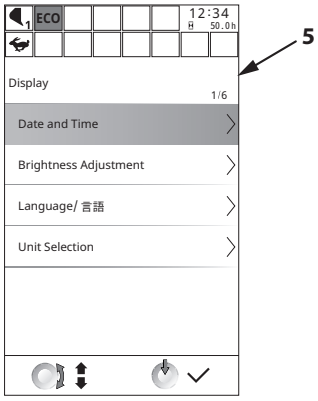

MDFY-MT-017-1 en_GB

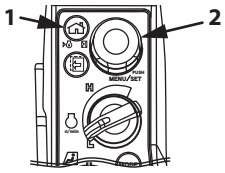

MDFY-01-094-12 ja

2. Push selector/set switch (2) to display “Date and Time” screen (7).
3. Rotate selector/set switch (2) to highlight Time Setting (8).

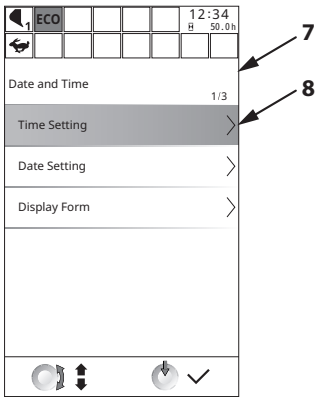

MDFY-MT-018-1 en_GB

4. Push selector/set switch (2) to display "Time Setting" screen (9).
5. Rotate selector/set switch (2) to highlight “Hour” or “Minute” (10) and push selector/set switch (2).
6. Rotate selector/set switch (2) to adjust the clock values. Rotate clockwise to adjust the value upwards, and counterclockwise to decrease.
7. Once the values are correct, push selector/set switch (2) to end the setting procedure.
8. After completing the settings, push home switch (1) to return to the basic screen.

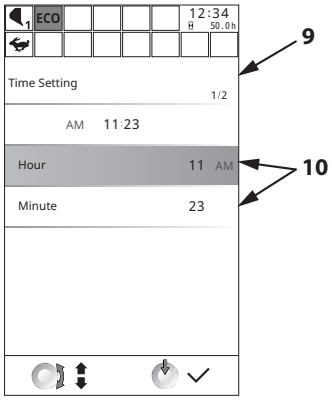

MDFY-MT-163-1 en_GB

Date Setting Procedure

1. From display screen (5), highlight "Date and Time" and push selector/set switch (2).

   NOTE

   For how to go to display screen (5), refer to "Display" (1-67).

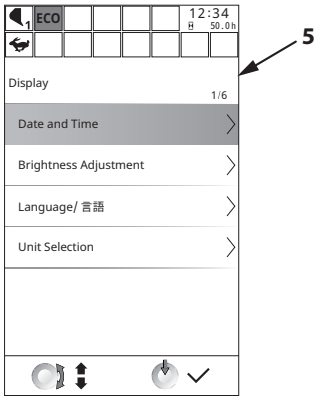

MDFY-MT-017-1 en_GB

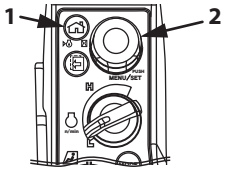

MDFY-01-094-12 ja

2. Push selector/set switch (2) to display "Date and Time" screen (7).
3. Rotate selector/set switch (2) to highlight "Date Setting" (8).

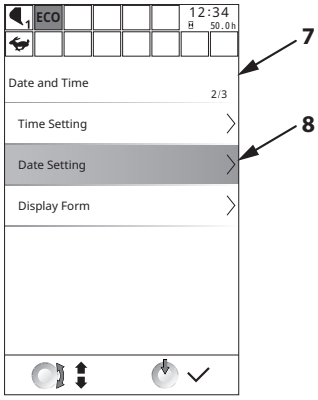

MDFY-MT-020-1 en_GB

4. Push selector/set switch (2) to display "Date" screen (9).
5. Rotate selector/set switch (2) to highlight "Year", "Month" or "Day" (10) and push selector/set switch (2).
6. Rotate selector/set switch (2) to adjust the date. Rotate clockwise to adjust the value upwards, and counterclockwise to decrease.
7. Push selector/set switch (2) to end the date setting procedure.
8. After completing the settings, push home switch (1) to return to the basic screen.

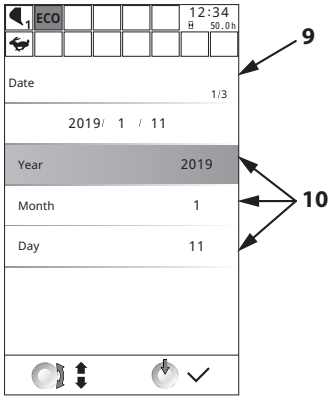

MDFY-MT-021-1 en_GB

Procedure for Setting Display Mode

1. From display screen (5), highlight "Date and Time" and push selector/set switch (2).

   NOTE

   For how to go to display screen (5), refer to "Display" (1-67).

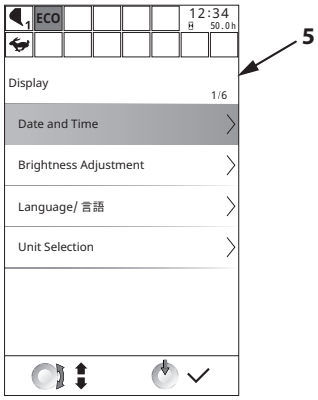

MDFY-MT-017-1 en_GB

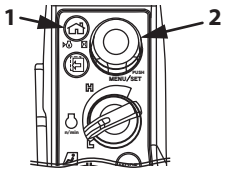

MDFY-01-094-12 ja

2. Push selector/set switch (2) to display "Date and Time" screen (7).
3. Rotate selector/set switch (2) to highlight "Display Form" (8).

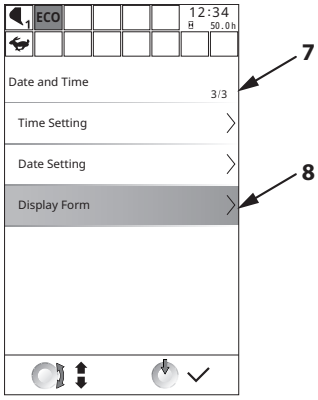

MDFY-MT-022-1 en_GB

4. Push selector/set switch (2) to display "Display Form" screen (9).
5. Rotate selector/set switch (2) to highlight “Time” or “Date” (10) and push selector/set switch (2).
6. Select Display Mode.
   [Time]
   Each push of selector/set switch (2) changes the time format as follows: 12h > 24h > 12h.
   [Date]
   Each push of selector/set switch (2) change the date format as follows: YYYY/MM/DD > MM/DD/YYYY > DD/MM/YYYY > YYYY/MM/DD.
7. After completing the settings, push home switch (1) to return to the basic screen.

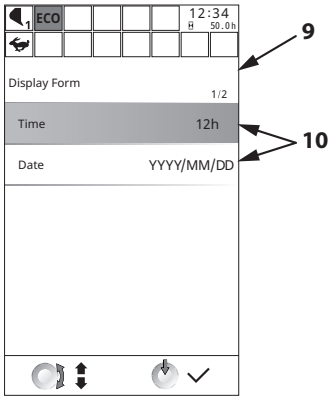

MDFY-MT-023-1 en_GB

MDAA-01-230 en_GB

MDAA-01-231 en_GB

MDAA-01-232 en_GB

MDAA-01-233 en_GB

MDAA-01-234 en_GB

Brightness Adjustment Procedure

1. From display screen (5), highlight "Brightness Adjustment" (6) and push selector/set switch (2).

   NOTE

   For how to go to display screen (5), refer to "Display" (1-67).

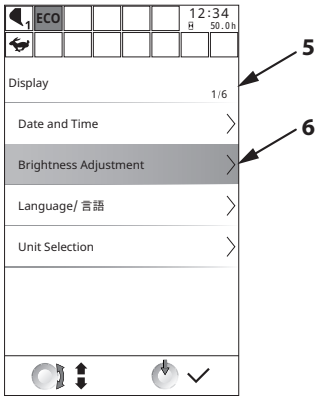

MDFY-MT-024-1 en_GB

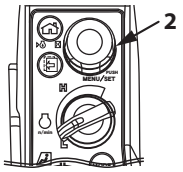

MDFY-01-094-7 ja

2. Push selector/set switch (2) to display "Brightness Adjustment" screen (7).
3. Rotate selector/set switch (2) clockwise to make the screen brighter, counterclockwise to make the screen darker.
4. Once the desired brightness is achieved, push selector/set switch (2) to finalize.

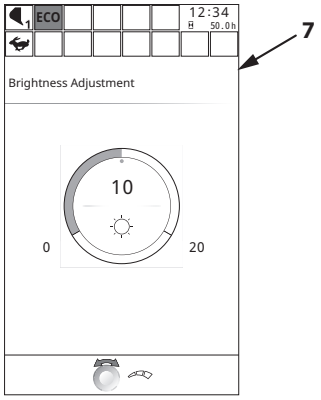

MDFY-MT-025-1 en_GB

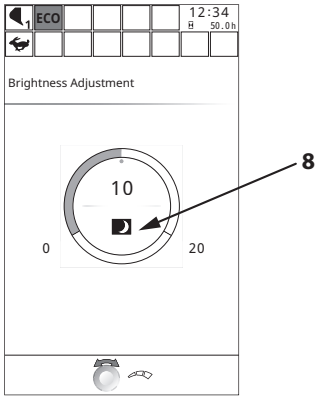

MDFY-MT-026-1 en_GB

NOTE

- *When the work light is turned ON, the monitor screen changes to night mode and mark (8) is displayed. Brightness can be adjusted for day mode and night mode respectively.*
- *When the work light is turned ON during daytime, you can still activate the daytime screen by pushing "0" (9) on the numeric keypad.*

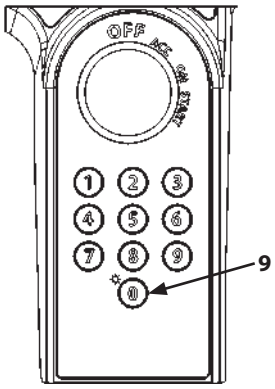

Numeric Keypad

MDFY-01-017-1 ja

Language Setting Procedure

1. From display screen (5), highlight “Language/言語” (6) and push selector/set switch (2).

   NOTE

   For how to go to display screen (5), refer to “Display” (1-67).

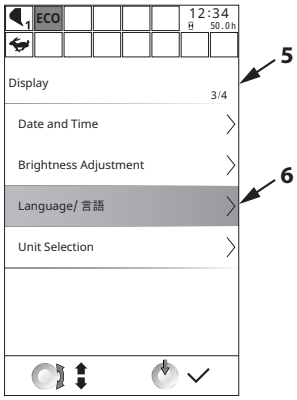

MDFY-MT-082-1 en_GB

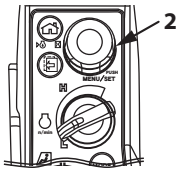

MDFY-01-094-7 ja

2. Push selector/set switch (2) to display “Language/言語” screen (7).
3. Rotate selector/set switch (2) to highlight the desired language. Push selector/set switch (2) to make the change.
   When the setting is confirmed, a black square appears in the checkbox.
   To display in the set language, a monitor system restart is required. Turn the key switch to the OFF position and then turn it to the ON position again.

MDFY-MT-027-1 en_GB

Display Language List

Language	Screen Display	Language	Screen Display
English	English	Vietnamese	Tiếng Việt
Japanese	日本語	Burmese	မြန်မာ
Chinese (Traditional)	繁體中文	Arabic	اللغة العربية
Spanish	Español	Persian	زبان فارسی
Italian	Italiano	Turkish	Türkçe
French	Français	Danish	Dansk
German	Deutsch	Estonian	Eesti
Dutch	Nederlands	Polish	Polski
Russian	Русский	Icelandic	Íslenska
Portuguese	Português	Croatian	Hrvatski
Chinese (Simplified)	简体中文	Slovenian	Slovenščina
Finnish	Suomi	Romanian	limba română
Greek	Ελληνικά	Bulgarian	Български език
Swedish	Svenska	Lithuanian	Lietuvių kalba
Norwegian	Norsk	Czech	Čeština
Slovakian	Slovenčina	Hungarian	Magyar
Serbian	Srpski	Hebrew	עברית
Latvian	Latviešu		

Unit Setting Procedure

1. From display screen (5), highlight "Unit Selection" (6) and push selector/set switch (2).

   NOTE

   For how to go to display screen (5), refer to "Display" (1-67).

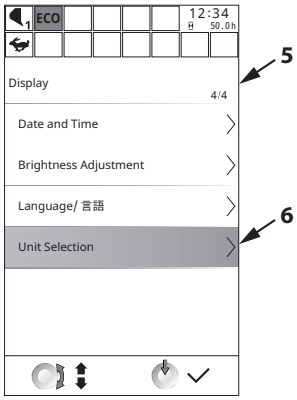

MDFY-MT-083-1 en_GB

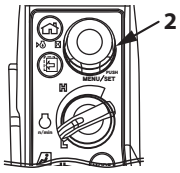

MDFY-01-094-7 ja

2. Push selector/set switch (2) to display unit selection screen (7).
3. Rotate selector/set switch (2) to highlight "Unit". Push selector/set switch (2) to set the unit (Metric or US system).

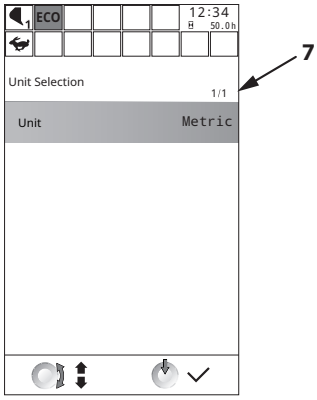

MDFY-MT-028-1 en_GB

Settings

On the setting screen, settings can be changed for the following items.

- Meter
- PBLI
- Auto Shut-Down
- Aftertreatment Device Regeneration Inhibit
- Attachment Name Input
- Password Change (Optional)

How to Display the Setting Screen

1. From menu screen (3), select "Setting" (4) and push selector/set switch (2).

   NOTE

   For how to display menu screen (3), refer to "Displaying the Main Menu" (1-15).

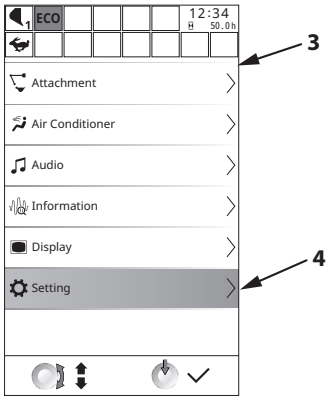

MDFY-MT-009-1 en_GB

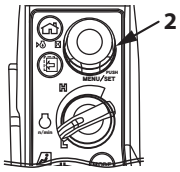

MDFY-01-094-7 ja

2. Push selector/set switch (2) to display Setting screen (5).
3. Rotate selector/set switch (2) to highlight the item you wish to set.
4. Push selector/set switch (2) to display the corresponding screen.

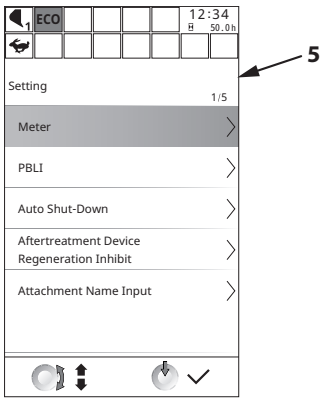

MDFY-MT-010-1 en_GB

Meter

From the meter setting screen, settings for “Sub Meter”, “ECO Gauge” and “Hydraulic Oil Temperature” can be made. In addition, under Sub Meter, 6 different sub meters are available for selection.

Sub Meter Selection

Select sub meters to add to the display in sub meter display area (8).

- Average Fuel Consumption Rate
- Breaker Hour Meter
- Actual Engine Speed
- Ambient Air Thermometer
- Particulate Matter Accumulate Amount
- Voltmeter

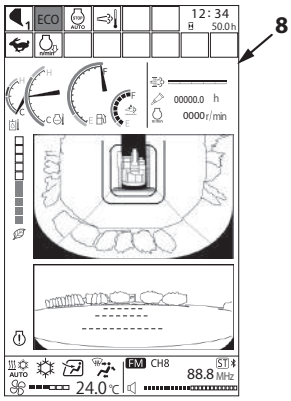

MDFY-MT-001-2 ja

Sub Meter Selection Procedure

1. From setting screen (5), select Meter (6) and push selector/set switch (2).

   NOTE

   For how to display setting screen (5), refer to "Setting" (1-78).

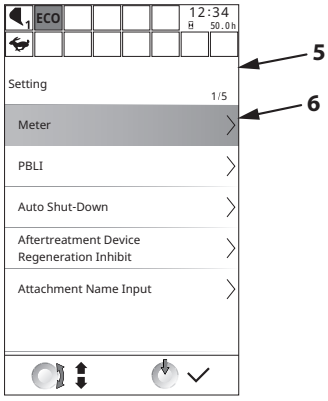

MDFY-MT-010-2 en_GB

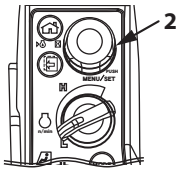

MDFY-01-094-7 ja

2. Rotate selector/set switch (2) to highlight Sub Meter (8).

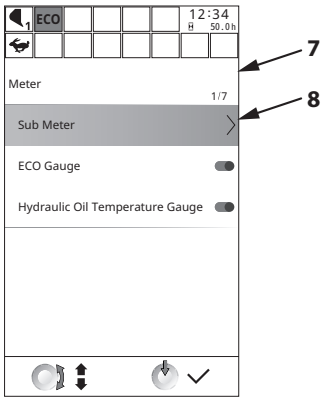

MDFY-MT-011-1 en_GB

3. Push selector/set switch (2) to display Sub Meter selection screen (9).
4. Rotate selector/set switch (2) to highlight the desired meter option.
5. Push selector/set switch (2) to enable the change. When the setting is confirmed, a black square appears in checkbox (10) to the right.
   Pushing selector/set switch (2) again will cancel the selection.

NOTE

- *Up to 3 sub meters can be selected at a time. The icons of the selected sub meters are displayed in the area marked (11).*
- *If the machine is equipped with the AUX function levers, sub meter (12), which displays the allocated functions of the attachment switches on the AUX function levers, appears in the uppermost part of the sub meter display area. In addition to this sub meter, a further two sub meters can be displayed.*
  If you wish to change the function allocated to the attachment switch of the AUX function lever, contact your authorized dealer.

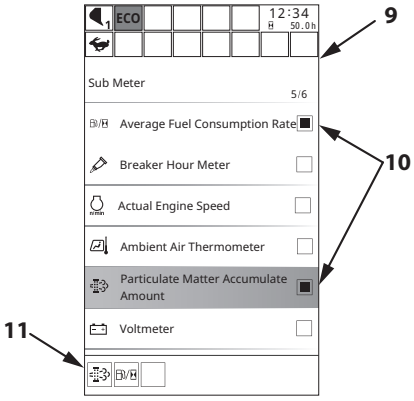

MDFY-MT-012-1 en_GB

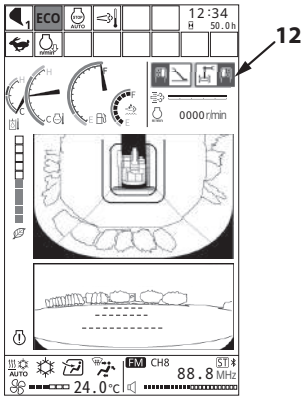

MDFY-MT-156-1 ja

Eco Gauge

Meter area (1) displays the environmental impact of the way the machine is being driven.

The higher the gauge reading, the ower the environmental impact.

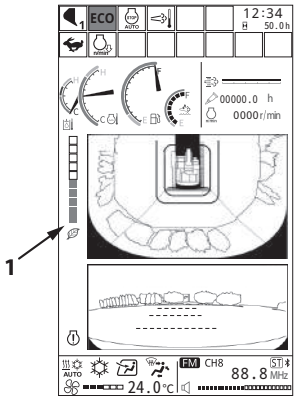

MDFY-MT-001-3 ja

Eco Gauge Display Procedure

1. From Setting screen (5), select Meter (6) and push selector/set switch (2).

   NOTE

   For how to display setting screen (5), refer to "Setting" (1-78).

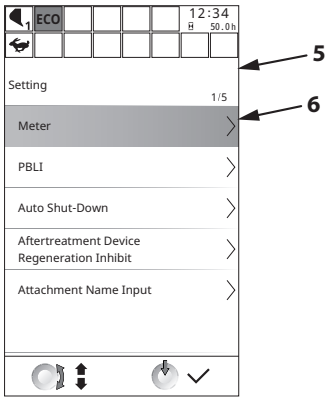

MDFY-MT-010-2 en_GB

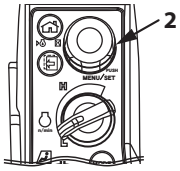

MDFY-01-094-7 ja

2. Rotate selector/set switch (2) to highlight Eco Gauge (8).
3. Push selector/set switch (2) to toggle switch icon (9).
   When switch icon (9) is toggled to the right, the gauge is turned ON and the background turns green.
   When toggled to the left, the switch is turned OFF and the background turns white.

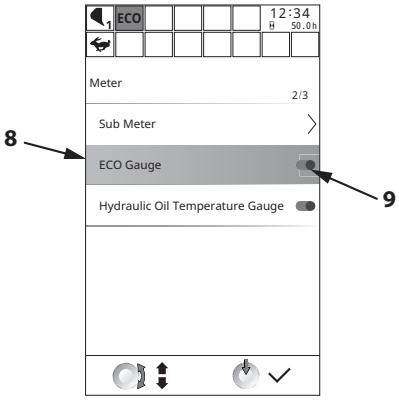

MDFY-MT-063-1 en_GB

Hydraulic Oil Temperature

Meter area (1) displays the hydraulic oil temperature gauge.

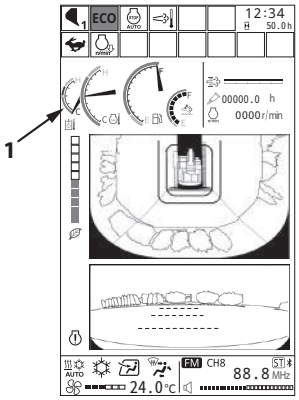

MDFY-MT-001-4 ja

Procedure for Displaying the Hydraulic Oil Temperature Gauge

1. From Setting screen (5), select Meter (6) and push selector/set switch (2).

   NOTE

   For how to display settings screen (5), refer to "Setting" (1-78).

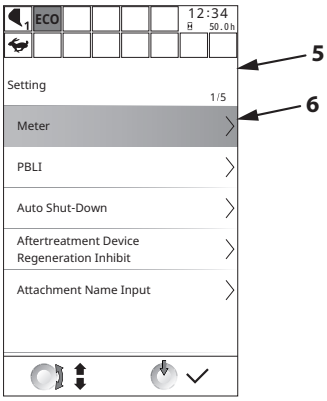

MDFY-MT-010-2 en_GB

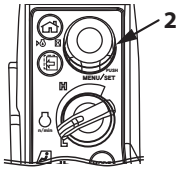

MDFY-01-094-7 ja

2. Rotate selector/set switch (2) to highlight Hydraulic Oil Temperature Gauge (8).
3. Push selector/set switch (2) to toggle switch icon (9).
   When switch icon (9) is toggled to the right, the gauge is turned ON and the background turns green.
   When toggled to the left, the switch is turned OFF and the background turns white.

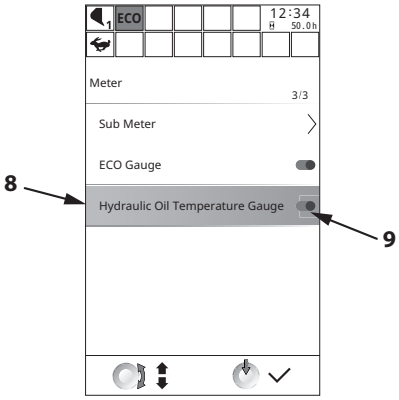

MDFY-MT-064-1 en_GB

PBLI (Push Button Low Idle)

The function of button (1) on the right control lever can be changed.

The following 4 variations of the function are available.

- Low Idle & Mute Radio
  Sets engine to set to slow idle speed and mutes the audio system.
- Low Idle Only
  Sets engine to slow idle speed.
- Mute Radio Only
  Mutes the audio system.
- OFF
  No function.

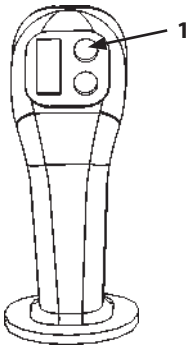

MCGB-01-030-2 ja

PBLI Selection Procedure

1. From setting screen (5), highlight PBLI (6) and push selector/set switch (2).

   NOTE

   For how to display setting screen (5), refer to "Setting" (1-78).

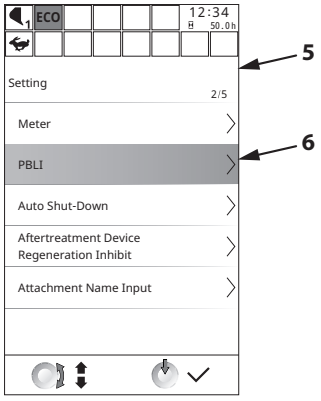

MDFY-MT-065-1 en_GB

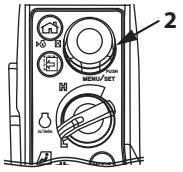

MDFY-01-094-7 ja

2. Rotate selector/set switch (2) to highlight the desired function (turns blue).
3. Push selector/set switch (2) to enable the change. When the setting is confirmed, a black square appears in checkbox (10) to the right. Pushing selector/set switch (2) again will cancel the selection.

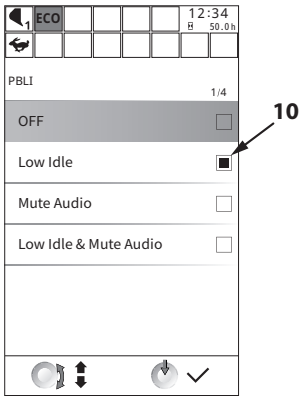

MDFY-MT-121-1 en_GB

Auto Shut-Down

WARNING

This function automatically stops the engine. Pay extra attention to the work being performed and working environment when using this function.

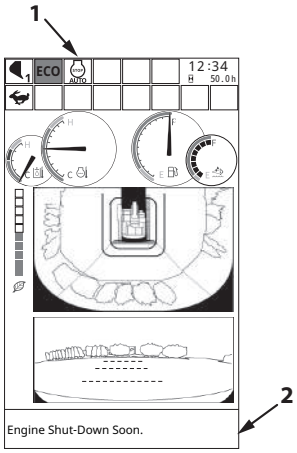

MDFY-MT-134-1 en_GB

The auto shut-down function can be set in this screen. Set the auto shut-down time and turn the function ON. Once the pilot shut-off lever is in LOCK position, the engine will automatically stop when the set time elapses. 30 seconds before the "Engine Shut-Down Soon.", display (2) shows a message indicating that the engine will stop and the indicator (1) starts flashing. The buzzer also sounds. The buzzer sounds once at 30 seconds before, and then continuously from 15 seconds before the engine stops. The engine speed drops to idle, and then stops after 15 seconds. If the pilot shut-off lever is in UNLOCK position before the engine stops, auto shut-down is disabled and the engine will not stop.

IMPORTANT

When the engine has been stopped by the auto shut-down function, to restart the engine, turn the key switch to ACC or OFF once, then turn it to START. When leaving the machine for a long period of time, turn the key switch OFF after auto shut-down. Do not simply leave the machine after auto shut-down. Doing so may result in the batteries discharging.

Toggling Auto Shut-Down ON/OFF and Changing the Setting Time

NOTE

The setting time can only be changed when the auto shut-down function is OFF. First change the setting time.

1. From setting screen (5), select Auto Shut-Down (6) and push selector/set switch (2).

   NOTE

   For how to display settings screen (5), refer to "Settings" (1-78).

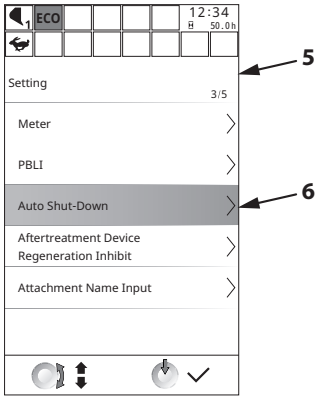

MDFY-MT-066-1 en_GB

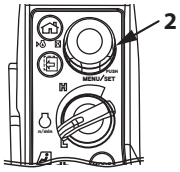

MDFY-01-094-7 ja

2. On pushing selector/set switch (2), "Auto Shut-Down" screen (7) will be displayed.
3. Rotate selector/set switch (2) to highlight Setting Time (8) and push selector/set switch (2).
   As selector/set switch (2) is rotated the Setting Time will change. Set it to the desired time.
4. Push selector/set switch (2) to confirm the change.

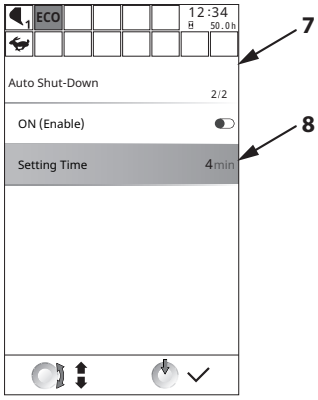

MDFY-MT-016-1 en_GB

5. Rotate selector/set switch (2) to highlight ON (Enable).
6. Push selector/set switch (2) to toggle switch icon (9).
   When switch icon (9) is toggled to the right, the gauge is turned ON and the background turns green.
   When toggled to the left, the switch is turned OFF and the background turns white.

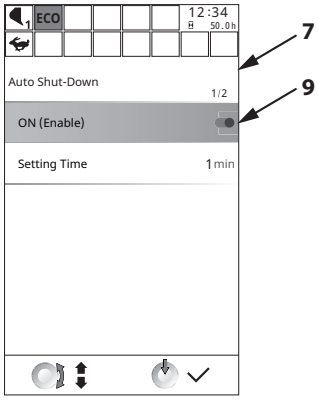

MDFY-MT-015-1 en_GB

Aftertreatment Device Regeneration Inhibit

IMPORTANT

The aftertreatment device regeneration can be inhibited from this screen to prevent auto regeneration while operating the machine in a dusty area or indoors.

Setting Aftertreatment Device Regeneration Inhibit

1. From Setting screen (5), select Aftertreatment Device Regeneration Inhibit (6) and push selector/set switch (2).

   NOTE

   For how to display Setting screen (5), refer to "Setting" (1-78).

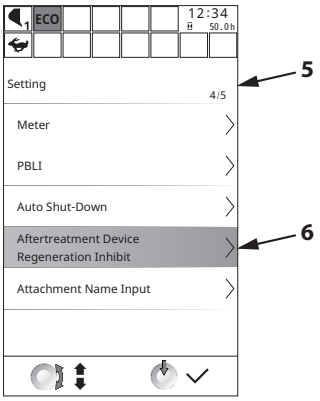

MDFY-MT-067-1 en_GB

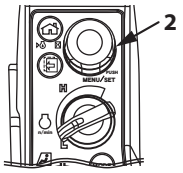

MDFY-01-094-7 ja

2. Push selector/set switch (2) to display Aftertreatment Device Regeneration Inhibit screen (7).
3. Check the message displayed on the monitor. After confirming, Rotate selector/set switch (2) to move the cursor over checkmark (8).

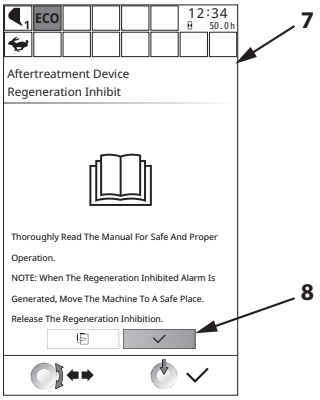

MDFY-MT-013-1 en_GB

4. Push selector/set switch (2) to display Aftertreatment Device Regeneration Inhibit screen (9).
5. Rotate selector/set switch (2) to highlight ON (enabled) (10).
6. Push selector/set switch (2) to toggle switch icon (10).
   When switch icon (10) is toggled to the right, the gauge is turned ON and the background turns green.
   When toggled to the left, the switch is turned OFF and the background turns white.

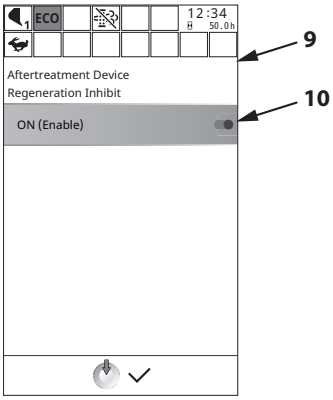

MDFY-MT-014-1 en_GB

7. When ON is selected, regeneration inhibited icon (11) is displayed on the monitor.

IMPORTANT

When the aftertreatment device regeneration request is displayed, move the machine to a safe place and follow the set procedure for releasing the inhibition on regeneration. Failure to do so may damage the aftertreatment device. For regeneration, refer to Aftertreatment Device (1-30,5-12).

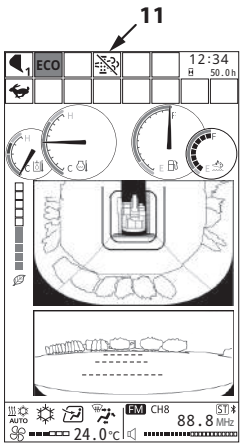

MDFY-MT-152-1 ja

Attachment Name Input

The attachment name displayed on the monitor can be changed.

Procedure for Entering a Name

1. From setting screen (5), select Attachment Name Input (6) and push selector/set switch (2).

   NOTE

   For how to display settings screen (5), refer to "Settings" (1-78).

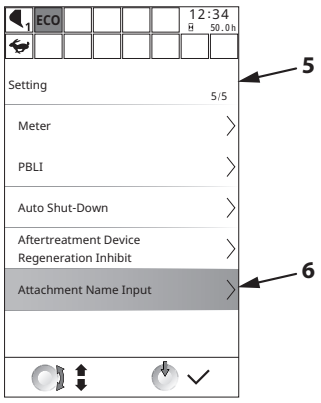

MDFY-MT-068-1 en_GB

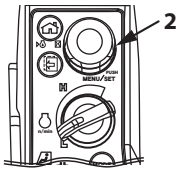

MDFY-01-094-7 ja

2. Push selector/set switch (2) to display Attachment Name Input screen (7).
3. Rotate selector/set switch (2) to highlight attachment (8) which is to undergo the change in name.

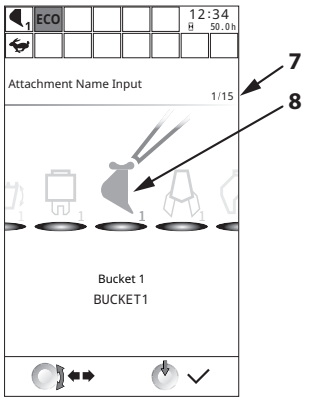

MDFY-MT-074-1 en_GB

4. Push selector/set switch (2) to Attachment Name Input screen (9).
5. Spaces for 8 characters will appear. Starting with the leftmost character, enter text one character at a time.
   To input text, push selector/set switch (2) and rotate left and right to enter.
6. On completion, rotate selector/set switch (2) to move the cursor over checkmark icon (10).
7. Push selector/set switch (2) to finalize the name change.

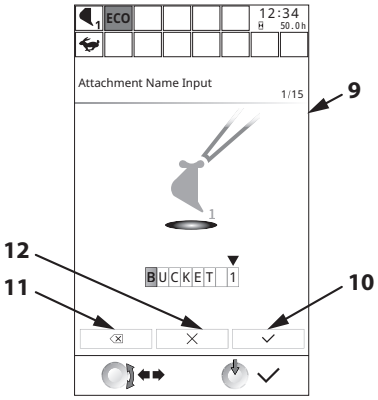

MDFY-MT-075-1 en_GB

NOTE

To delete the last entered character, rotate selector/set switch (2) to highlight (11), and then push selector/set switch (2).
To delete all entered characters, highlight (12) with the cursor and push selector/set switch (2).

Password Change (Optional)

When the password security function is enabled, the password can be changed.

Procedure for Changing

1. From setting screen (5), select Password Change (6) and push selector/set switch (2).

   NOTE

   For how to display setting screen (5), refer to "Setting" (1-78).

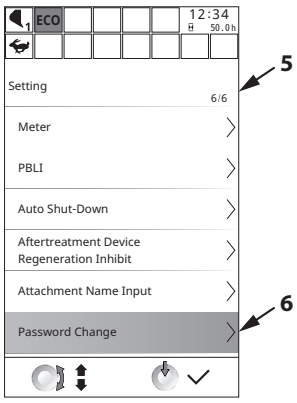

MDFY-MT-081-1 en_GB

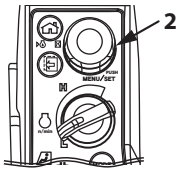

MDFY-01-094-7 ja

2. Push selector/set switch (2) to display Password Change screen (7).
3. Following the instructions on the monitor, enter the current password.
   Use the numeric keypad to enter.

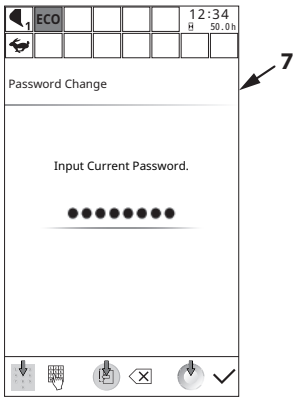

MDFY-MT-076-1 en_GB

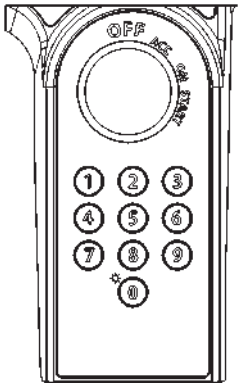

Numeric Keypad

MDFY-01-017 ja

4. Following the instructions on the monitor, enter the new password.
   The password must 3 to 8 digits long.
   After entering, push selector/set switch (2).

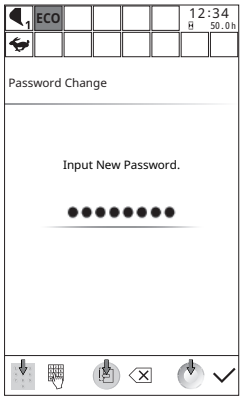

MDFY-MT-077 en_GB

5. Following the instructions on the monitor, enter the new password again.
   After entering, push selector/set switch (2).

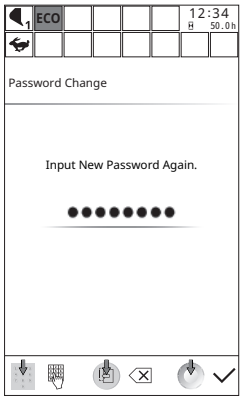

MDFY-MT-078 en_GB

6. The monitor should now display a message saying "Password Has Been Changed.". This indicates that the password has been changed successfully.

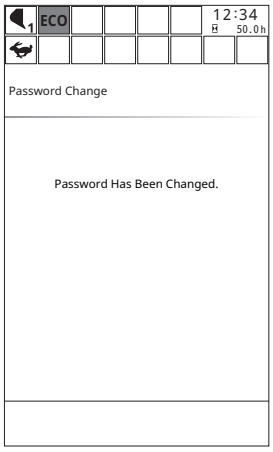

MDFY-MT-079 en_GB

Auto Air Conditioner

Summary

The features of the automatic air conditioner in the machine are as follows. Read the content carefully and understand it before use.
The operation/settings status of the air conditioner is displayed at the bottom (1) of the monitor.
The various air conditioner settings can be made using dedicated switches (2), (3) and (4), or via the monitor.
For how to perform these operations, please see the following pages.

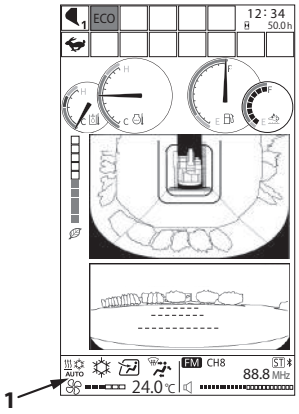

MDFY-MT-100-11 ja

IMPORTANT

If mark (5) is displayed on A/C display (1), there is a problem with communication between the air conditioner and the monitor. Contact your authorized dealer.

MDFY-01-096-1 ja

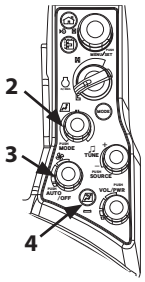

MDFY-01-027-15 ja

Features

- Full auto control
  The vent temperature, vent flow rate, intakes, and vents are automatically controlled to maintain the temperature set for inside the cab using the temperature control switch, irrespective of fluctuations in outside air temperature, sunlight, etc.
  It may change to cool head/warm feet (bi-level) mode in some conditions, such as set temperature, inside/outside temperature, amount of sun, etc.
- Maximum cooling/heating function
  Maximum heating / maximum cooling can be selected by setting the set temperature to 18°C or 32°C using the temperature control switch.
- Heating startup control
  When starting up in winter etc. under either automatic or manual control with a low engine coolant temperature and a low temperature in the cab, and with the front vent or foot vent selected, large volumes of cold air may be blown into the operator's station. This feature prevents this by fixing the flow rate at LO until the coolant temperature has risen.

Name of Components

1- Front Vents
2- Foot Vent
3- Defroster Vent
4- Rear Vent
5- Temperature Control Switch/Mode Switch
6- AUTO/OFF Switch/Fan Switch
7- Circulating/Fresh Air Control Switch
8- Air Conditioner Display (Monitor)

NOTE

Air flow direction can be adjusted by moving the louvers on all air vents except for foot vent (2). Window fogging can be suppressed by facing vents to the side and rear windows. The louvers of front (1), defroster (3) and rear (4) vents can be opened/closed manually as well.

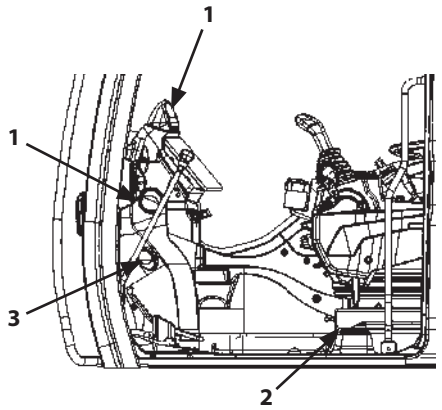

MDFY-01-022-2 ja

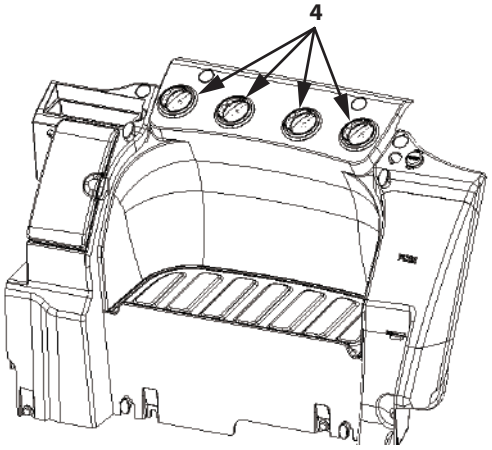

MDFY-01-114-3 ja

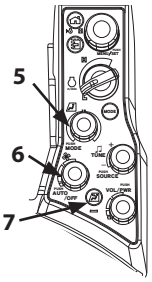

MDFY-01-027-8 ja

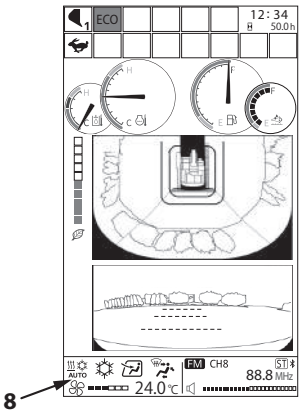

MDFY-MT-100-12 ja

Air Conditioner Display (Monitor)

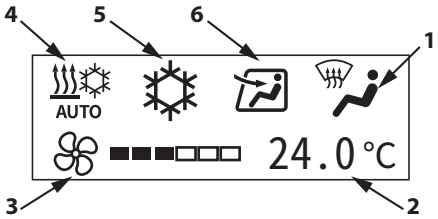

MDFY-01-097-1 ja

1- Vent Display
2- Temperature Display
3- Fan Level Display
4- AUTO Display
5- Air Conditioner Compressor ON/OFF Display
6- Circulating/Fresh Air Display

- Vent Display
  The vents can be changed by toggling between modes.

Front Air Vents
(Including defroster vent)

Front, rear and defroster vents
(Including defroster vent)

Front, rear, foot and defroster vents
(Including defroster vent)

Foot Vent

- Temperature Display
  Displays set temperature.
- Fan Level
  Can be adjusted to one of 6 levels. The fan level is indicated by the segment display.
- AUTO Display
  When full auto air conditioning (temperature, fan level, air direction) is selected, “AUTO” is displayed.
- Air Conditioner Compressor ON/OFF Display
  When this icon is lit, the air conditioner compress is ON.
- Circulating/Fresh Air Display
  Indicates whether fresh air is being drawn into the cab.

Air is being circulated within the cab.

Air from outside is being drawn in.

Air Conditioner Operation (When Operating with Switches)

The air conditioner is operated using switches (1), (2) and (3) on the switch panel.
The following explains the operation of these switches.

IMPORTANT

The air conditioner compressor ON/OFF function is available only via the monitor.
For guidance on this operation, refer to "Turning the Air Conditioner Compressor ON/OFF" (1-104).

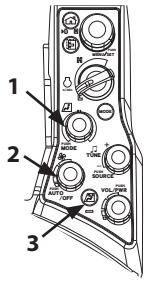

MDFY-01-027-16 ja

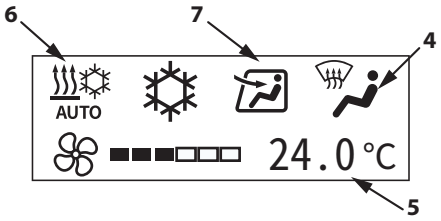

MDFY-01-097-2 ja

Mode Switch

Pushing switch (1) cycles the setting through 4 vent modes.
As the mode is toggled, vent indicator (4) on the monitor changes accordingly.

NOTE

Pressing switch (1) while "AUTO" is selected will cancel "AUTO".

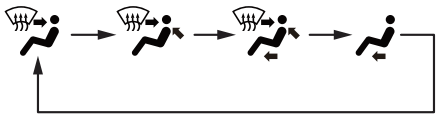

MDF3-01-052 ja

Temperature Control Switch

Rotate switch (1) to change temperature display (5).
Rotate clockwise to increase the temperature, and counterclockwise to decrease it.
The temperature can be set from 18.0 to 32.0℃. It can be set in 0.5°C increments.
Use this to set the desired temperature.

AUTO/OFF Switch

While the air conditioner is OFF, pushing switch (2) switches the unit to AUTO mode and causes icon (6) to light up on the monitor display.
Pushing switch (2) while the icon is lit will stop operation of the fan and air conditioner.

Fan Switch

Rotating switch (2) toggles the fan.
Rotate clockwise to increase the air flow and counterclockwise to reduce it.

NOTE

When AUTO is selected, operating the fan switch toggles the manual mode.

Circulating/Fresh Air Control Switch

1. When switch (3) is lit up in green, the mode is circulating air mode. When off, the mode is fresh air mode. Pushing the switch toggles between these modes. As the mode is toggled, icon (7) changes accordingly.

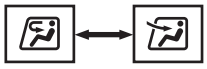

MDFY-01-105 ja

Air Conditioner Operation (When Operating with Monitor)

The operation of the air conditioner is normally controlled using switches (1), (2) and (3), but similar operations can be performed from the multi-function monitor.
The following describes how to operate the air conditioner from the multi-function monitor.

IMPORTANT

The air conditioner compressor ON/OFF function is available only via the monitor.
For how to operate, refer to “Turning the Air Conditioner Compressor ON/OFF” (1-104).

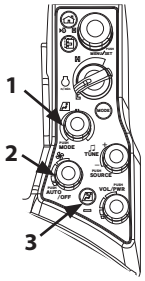

MDFY-01-027-16 ja

Air Conditioner ON/OFF

This setting toggles the entire air conditioner ON/OFF.

1. From menu screen (5), select "Air Conditioner" and push selector/set switch (2).

   NOTE

   For how to display menu screen (5), refer to "Main Menu Display" (1-15).

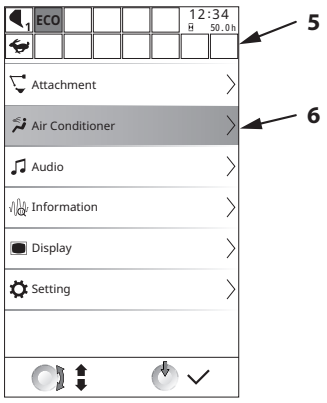

MDFY-MT-006-1 en_GB

2. Push selector/set switch (2) to display Air Conditioner screen (7).
3. Rotate selector/set switch (2) to highlight the ON/OFF button (8).
4. Push selector/set switch (2) to toggle between air conditioner ON/OFF.

   NOTE

   In the ON state, (9) at the bottom part of the ON/OFF button will light up green.

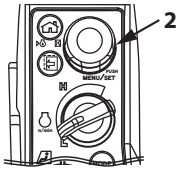

MDFY-01-094-7 ja

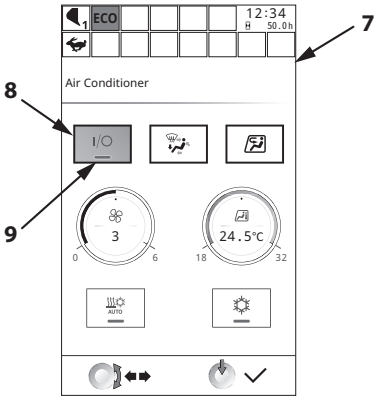

MDFY-MT-007-1 en_GB

Selecting the Air Vents

This setting is for selecting the air conditioner vents.

1. From Air Conditioner screen (7), highlight air vent selection (8) and push selector/set switch (2).

   NOTE

   For how to display Air Conditioner screen (7), refer to "Air Conditioner Operation (Monitor)" (1-97).

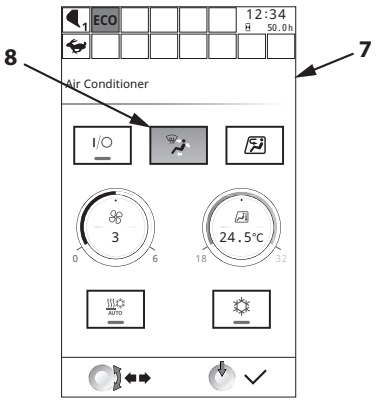

MDFY-MT-057-1 en_GB

2. Pushing selector/set switch (2) cycles the setting through 4 vent arrangements.
   Icon (8) changes accordingly.

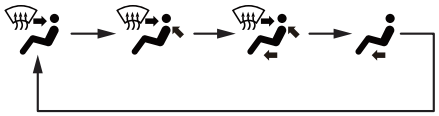

MDF3-01-052 ja

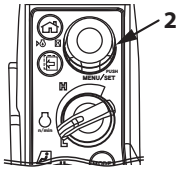

MDFY-01-094-7 ja

Circulation Air Mode

This setting is for switching the air intake.

1. From Air Conditioner screen (7), highlight circulation air mode (8) and push selector/set switch (2).

   NOTE

   For how to display Air Conditioner screen (7), refer to "Air Conditioner Operation (Monitor)"(1-97)

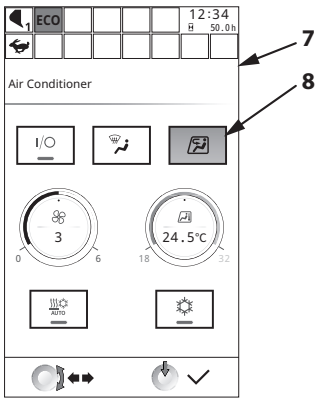

MDFY-MT-058-1 en_GB

2. Push selector/set switch (2) to toggle between inside air and outside air.
   Icon (8) changes accordingly.

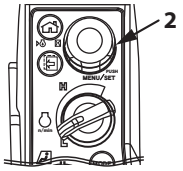

MDFY-01-094-7 ja

Air is being circulated within the cab.

Outside air is being taken in.

Fan Level

This setting is for changing the fan level.

1. From Air Conditioner screen (7), select fan level (8) and push selector/set switch (2).

   NOTE

   For how to display air conditioner screen (7), refer to "Air Conditioner Operation (Monitor)" (1-97).

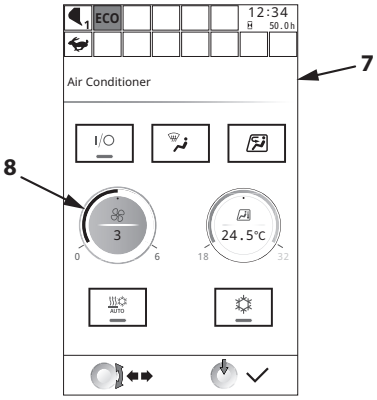

MDFY-MT-059-1 en_GB

2. Rotate selector/set switch (2) clockwise or counterclockwise to select the fan level.
   As selector/set switch (2) is rotated, the arc-like bar and value in the middle will change.
   The fan level can be set to any of 6 levels.
   Push selector/set switch (2) to enable the change.

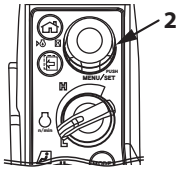

MDFY-01-094-7 ja

Temperature Control

This setting is for setting the air conditioning temperature.

1. From Air Conditioner screen (7), select temperature setting (8) and push selector/set switch (2).

   NOTE

   For how to display air conditioner screen (7), refer to "Air Conditioner Operation (Monitor)" (1-97).

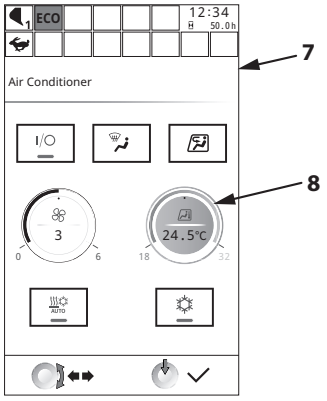

MDFY-MT-060-1 en_GB

2. Rotate selector/set switch (2) clockwise or anticlockwise to set the temperature.
   As selector/set switch (2) is rotated, the arc-like bar and the value in the middle will change.
   The temperature can be set from 18.0 to 32.0℃. It can be set in 0.5℃ increments.
   Push selector/set switch (2) to enable the change.

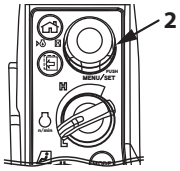

MDFY-01-094-7 ja

AUTO Setting

This is for toggling AUTO ON/OFF.

1. From air conditioner screen (7), highlight AUTO switch (8) and push selector/set switch (2).

   NOTE

   For how to display Air Conditioner screen (7), refer to "Air Conditioner Operation (Monitor)" (1-97).

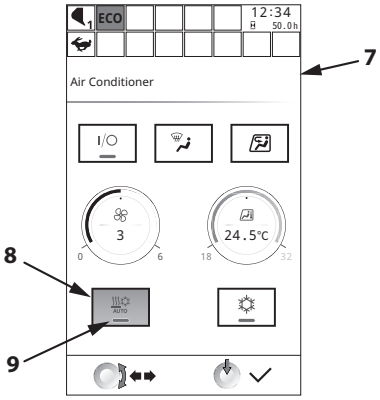

MDFY-MT-061-1 en_GB

2. Push selector/set switch (2) to toggle AUTO ON/OFF.

   NOTE

   - *In the ON state, (9) at the bottom part of the ON/OFF button will light up green.*
   - *It may change to cool head/warm feet (bi-level) mode in some conditions, such as set temperature, inside/outside temperature, amount of sun, etc.*
   - *Maximum cooling/heating function*
     Maximum heating / maximum cooling can be selected by setting the set temperature to 18℃ or 32℃ using the temperature control switch.

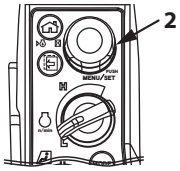

MDFY-01-094-7 ja

Air Conditioner Compressor ON/OFF Switch

This is for toggling the air conditioner compressor ON/OFF.

IMPORTANT

This setting cannot be made using the physical switch panel.

1. From air conditioner screen (7), highlight air conditioner compressor ON/OFF switch (8), and push selector/set switch (2).

   NOTE

   For how to display Air Conditioner screen (7), refer to "Air Conditioner Operation (Monitor)" (1-97).

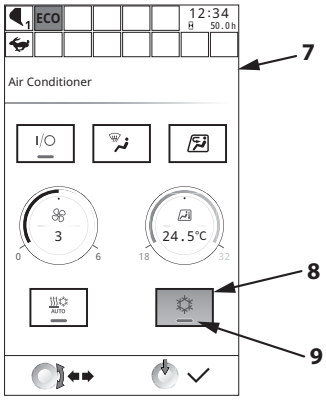

MDFY-MT-062-1 en_GB

2. Push selector/set switch (2) to toggle air conditioner compressor ON/OFF.

   NOTE

   In the ON state, (9) at the bottom part of the ON/OFF button will light up green.

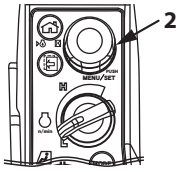

MDFY-01-094-7 ja

Tips for Optimal Air Conditioner Usage

For Rapid Cooling

Temperature in the cab may rise over 80°C (176°F) when the machine is exposed to sun light in the summer.

In this case, ventilate air in the cab first by opening the windows for rapid cooling.

After starting the engine, push AUTO/OFF switch (6). Set temperature to "18.0" on the monitor by using temperature control switch (5). Turn air circulation mode ON by using Circulating/Fresh Air Control Switch (7) on the monitor.

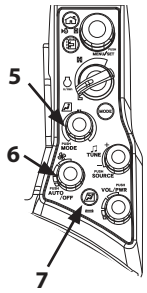

MDFY-01-027-17 ja

Close the windows when the cab cools down to the ambient temperature.

When the Windows are Fogged Up

When the insides of the windows fog up due to high humidity inside the operator's station, such when it rains, operate the air conditioner to clear the windows. The direction of the louvers on front and rear vents (1) and (4) and on defroster vent (3) can be adjusted by hand. Use the louvers to adjust the direction of the air flow and remove the fog.
Note also the when humidity is high outside the cab, and if the air conditioner has been run excessively, the outside of the windows may fog up. If this happens, turn off the air conditioner to adjust the temperature in the operator's station.

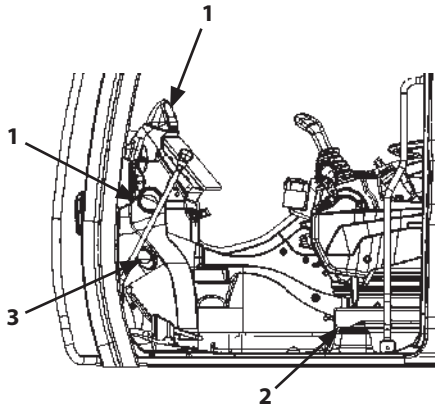

MDFY-01-022-2 ja

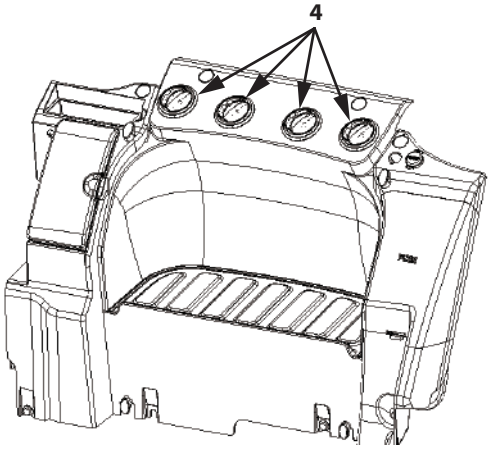

MDFY-01-114-3 ja

Off-Season Air Conditioner Maintenance

To protect each part of the compressor from a lack of lubricant, operate the air conditioner at least once a month for several minutes with the engine running at a slow speed during the off-season.

IMPORTANT

- **Do not increase the engine speed suddenly. This may damage the compressor.**
- **Refer to the item "Cleaning and Replacing Air Conditioner and Heater Internal/External Filters" in Chapter 7, Maintenance Section, for maintenance of filters.**
- **Keep auto air conditioner sensor (1) clean for effective air conditioner performance. Avoid placing any obstructions around the sensor.**

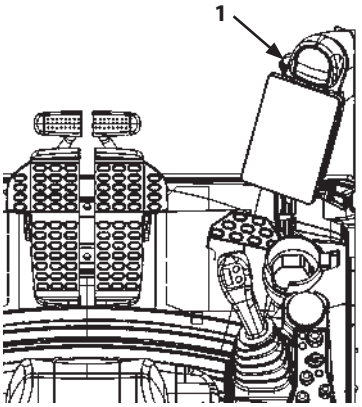

MDFY-01-028-1 ja

Audio Operation

CAUTION

Listening to the audio system is distracting. Refrain from listening to the radio in the cab while operating the machine; use only during breaks.

Summary

The following describes features of the audio controller for the audio system in the machine. Please read the contents carefully and be sure to understand before use.
The audio operation/setting status is displayed in bottom part (1) of the monitor.
Audio settings and operations can be performed using the dedicated switches (2) and (3) or from the monitor.
For how to perform these operations, please see the following pages.

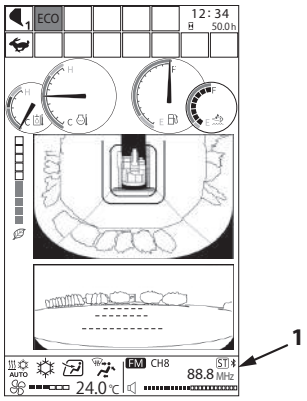

Basic Screen

MDFY-MT-100-13 ja

IMPORTANT

If mark (4) is displayed on the audio screen, there is problem with the communication between the audio system and the monitor.
Contact your authorized dealer.

MDFY-01-109-1 ja

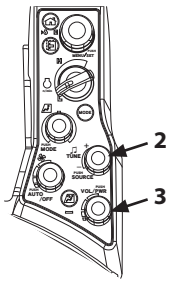

MDFY-01-027-6 ja

Features

- Multiple Input Sources
  The audio system in the machine can handle the following input sources.
  AM radio
  FM radio
  DAB (digital radio)
  External inputs via Bluetooth®
- Channel Search and Preset Memory
  Radio channels can be automatically or manually tuned and presets can be stored.
  Tuned channels can be stored in advance using the numeric keypad, and the user can switch between the stored channels using the numeric keypad alone.
- Sound Quality Control
  Quality can be adjusted (to low or high). Adjust to the desired tone.
- Handsfree Calling with a Cell Phone
  Connect your cell Phone using Bluetooth® connection to enable handsfree calling.

Name of Components and Control Guide (Switches)

For general control of the audio system, use the switches on the switch panel.

1- Selector/Set Switch
2- Audio Source Selector/Tuning Selector Knob
3- Power Switch/Volume Control Knob
4- Numeric Keypad

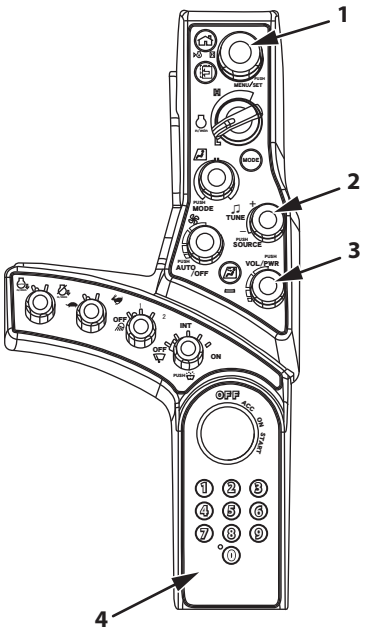

MDFY-01-002-7 ja

Switch Operation Guide

- Audio Source Selector/Tuning Knob

  Each push of source selector/tuning knob (2) steps the audio source setting through the cycle DAB > AM > FM > Bluetooth® and back to DAB.

- Audio Source Selector/Tuning Knob

  Rotate source selector/tuning knob (2) to adjust frequency when using AM or FM or change the channel when using DAB.

  NOTE

  When using AM or FM, rotate clockwise for higher frequencies, and counterclockwise for lower.

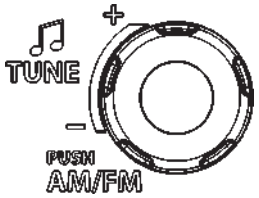

MDFY-01-008 ja

- Power Switch/Volume Control Knob

  Push power switch/volume control knob (3) to switch the audio system “ON” and “OFF”.

- Power Switch/Volume Control Knob

  Rotate power switch/volume control knob (3) clockwise to increase the volume, or counterclockwise to lower it.

- Numeric Keypad

  Push No. 1 to 8 on the numeric keypad to change between stored channels.

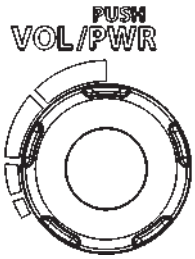

MDFY-01-009 ja

Numeric Keypad Allocation (Switches)

Analog and digital radio stations can be allocated to keys of numeric keypad (4).
Allocations is performed using keys 1 to 8 on the numeric keypad.
The following describes the procedure for allocating frequencies selected using source selector switch/ tuning knob (2).

1. Operate the source selector switch/tuning knob (2) to display the frequency you wish to allocate.

   NOTE

   - *For how to operate source selector switch/ tuning knob (2), refer to "Switch Operation Guide" (1-108).*
   - *Check that the desired frequency appears in audio display section (1).*

2. Long press the desired key (among keys 1 to 8) on the numeric keypad (4) for this frequency.

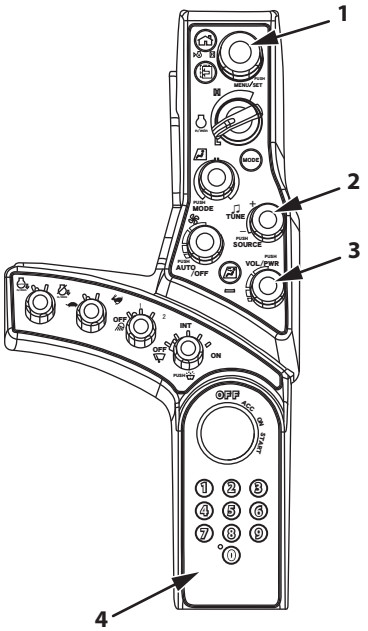

MDFY-01-002-7 ja

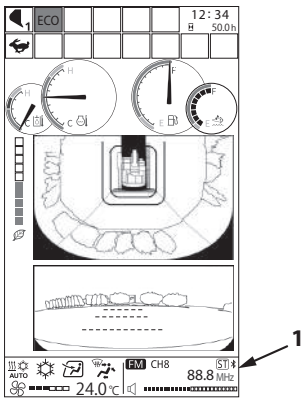

Basic Screen

MDFY-MT-100-13 ja

Monitor Display

The monitor display for audio changes depending on the source selected.

Displayed Items

1- AM/FM Display
2- Channel Display
3- Reception Frequency Display
4- Stereo Display
5- Bluetooth® Icon
6- Volume Display
7- DAB Display
8- Received Channel Name
9- Received Artist Name / Track Name Display
10- Bluetooth® Display

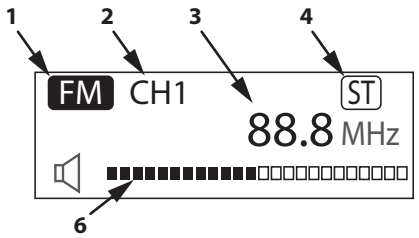

When AM/FM radio is selected

MDFY-01-106-1 ja

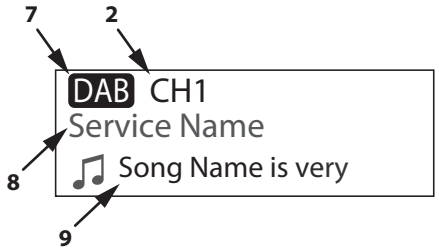

When DAB is selected

MDFY-01-107-1 ja

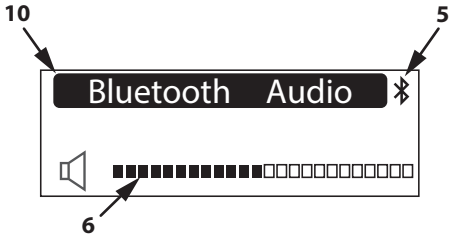

When Bluetooth® is selected

MDFY-01-108-1 ja

Explanation of Displayed Items

- AM/FM/DAB Display
  Displays input source currently being received.
- Channel Display
  Display channel to which the received radio signal is allocated.
- Stereo Display
  Indicates if the received broadcast is in stereo.
- Reception Frequency Display
  Indicates the frequency of the received radio signal.
- Bluetooth® Icon
  Indicates if there is an active Bluetooth® connection with an external device.
- Volume Display
  Indicates volume on a bar.
  The further the bar extends to the left, the higher the volume.
- Received Channel Name
  When using DAB, the channel name is displayed as text.
- Received Artist Name / Track Name Display
  When using DAB, the name of the artist and track for the currently playing music is displayed as text.
- Bluetooth® Display
  Displayed when Bluetooth® has been selected.

Operating the Audio System from the Multi-Monitor

Normal control of the audio system is performed using knobs (2) and (3). Similar operations are also possible from the multi-monitor. The multi-monitor can be used where necessary.

- Source Selection
- Tuning (to stations)
- Volume Control

As well the above-mentioned functions, there are some functions which can only be set from the multi-monitor. These are listed below.

- Autoseek Function (automatic tuning)
- TONE Control
- AUTO PRESET
- Bluetooth® Connection

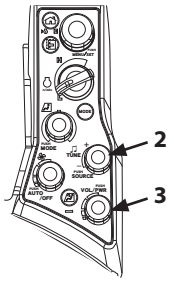

MDFY-01-027-6 ja

Source Selection and Audio Screen Display

From the monitor, various operations are performed from the screen for the selected audio source.
To display the various audio screens, follow the procedure below.

1. From menu screen (5), highlight Audio (6) and push selector/set switch (2).

   NOTE

   For how to display menu screen (5), refer to "Main Menu Display" (1-15).

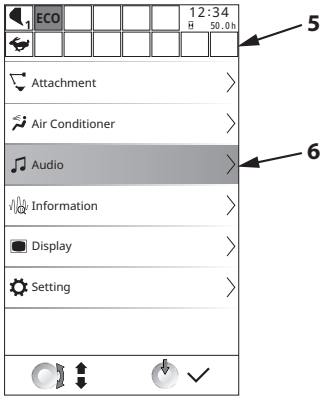

MDFY-MT-008-1 en_GB

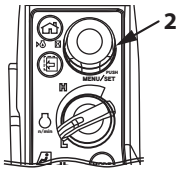

MDFY-01-094-7 ja

2. Push selector/set switch (2) to display audio screen (7) for the currently selected source.
   The illustration to the right shows the audio screen for AM/FM radio.

   NOTE

   The audio screen is the same for AM and FM radio.

3. To display another audio screen, rotate selector/set switch (2) to highlight Change Source (3).

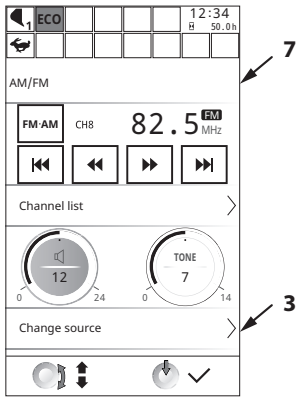

MDFY-MT-086-1 en_GB

4. Push selector/set switch (2) to display change audio screen (4).
   Highlight the desired audio source and push selector/set switch (2).

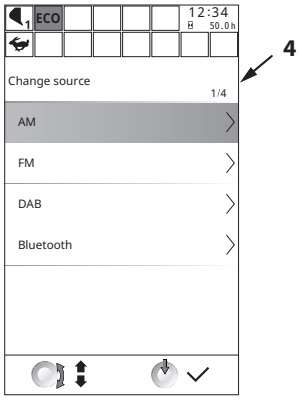

MDFY-MT-106-1 en_GB

The source-specific audio screens are as follows.

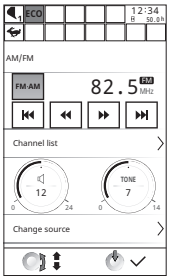

MDFY-MT-088 en_GB

AM/FM screen

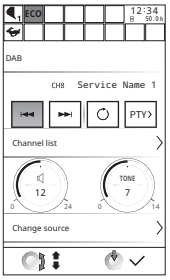

MDFY-MT-097 en_GB

DAB screen

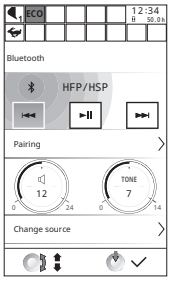

MDFY-MT-109 en_GB

Bluetooth® screen

Volume Control

Volume is adjusted in the same way for all sources.
Here, the adjustment will be described taking the AM/FM audio screen as an example.

1. Display audio screen (7) for the source in question.

   NOTE

   For how to display audio screen (7) for the various sources, refer to "Source Selection and Audio Screen Display" (1-113).

2. Rotate selector/set switch (2) to highlight volume setting (8).
3. Push selector/set switch (2).
4. Rotate selector/set switch (2) to adjust the volume. As selector/set switch (2) is rotated, the arc-like bar and value in the middle will change.
5. Push selector/set switch (2) to finalize the volume.

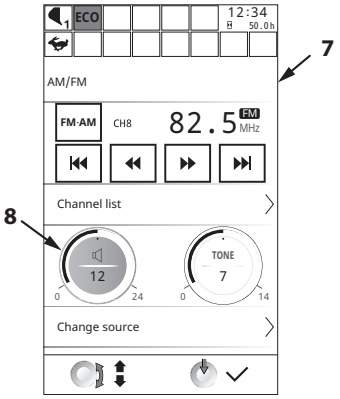

MDFY-MT-086-2 en_GB

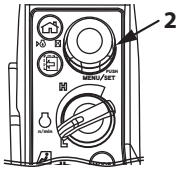

MDFY-01-094-7 ja

Tone Control

TONE is adjusted in the same way for all sources.
Here, the adjustment will be described taking the AM/FM audio screen as an example.

1. Display audio screen (7) for the source in question.

   NOTE

   For how to display audio screen (7) for the various sources, refer to "Source Selection and Audio Screen Display" (1-113).

2. Rotate selector/set switch (2) to highlight TONE (8).
3. Push selector/set switch (2).
4. Rotate selector/set switch (2) to adjust the TONE.
   As selector/set switch (2) is rotated, the arc-like bar and value in the middle will change.
   Rotate selector/set switch (2) clockwise to boost treble, counterclockwise to boost bass.
5. Push selector/set switch (2) to finalize the TONE.

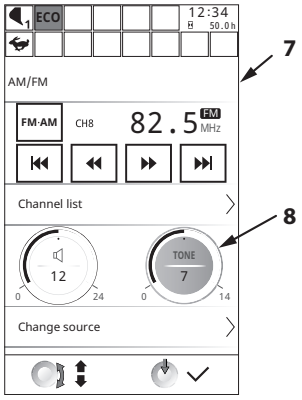

MDFY-MT-087-1 en_GB

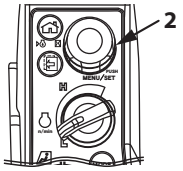

MDFY-01-094-7 ja

AM/FM Switching

It is normally possible to switch between AM and FM by selecting the source.
The following explains a convenient one-touch function for switching between AM and FM.

1. Display AM/FM audio screen (7).

   NOTE

   For how to display audio screen (7) for the various sources, refer to "Source Selection and Audio Screen Display" (1-113).

2. Rotate selector/set switch (2) to highlight AM/FM switch (8).
3. Each push of selector/set switch (2) will switch between AM and FM.
   Icon (9) will also switch between AM and FM.

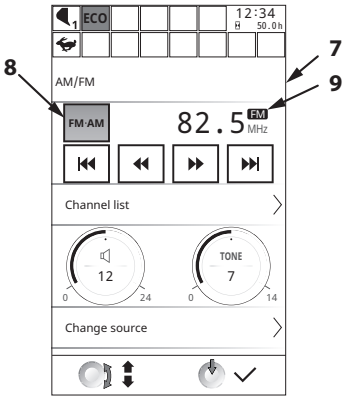

MDFY-MT-088-1 en_GB

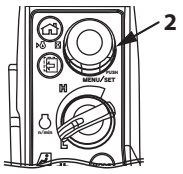

MDFY-01-094-7 ja

Tuning (AM/FM)

Tuning can be performed automatically or manually. Here, tuning will be described taking the AM/FM audio screen as an example.

1. Display AM/FM audio screen (7).

   NOTE

   For how to display AM/FM audio screen (7), refer to "Source Selection and Audio ScreenDisplay" (1-113).

2. Manual Tuning Procedure
   a. Rotate selector/set switch (2) to highlight seek (3) or seek (4).
   b. Each push of selector/set switch (2) the frequency that is received and displayed will change. Keep pushing until the desired frequency is reached.
3. Automatic Search Function
   a. Rotate selector/set switch (2) to highlight seek (7) or seek (8).
   b. Push selector/set switch (2) to automatically find a frequency with a strong signal.

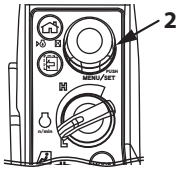

MDFY-01-094-7 ja

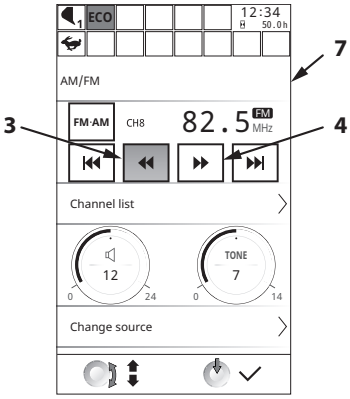

MDFY-MT-089-1 en_GB

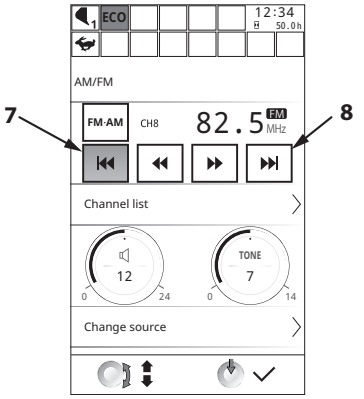

MDFY-MT-090-1 en_GB

Auto-Presetting Stations (AM/FM)

When using the AM/FM radio, it is possible to search for and store currently available radio stations.

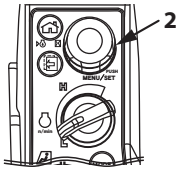

MDFY-01-094-7 ja

1. Display AM/FM audio screen (7).

   NOTE

   For how to display AM/FM audio screen (7), refer to "Source Selection and Audio Screen Display" (1-113).

2. Rotate selector/set switch (2) to highlight Channel List (8).

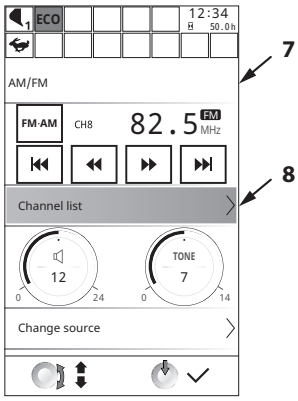

MDFY-MT-091-2 en_GB

3. Push selector/set switch (2) to display channel list screen (9).
4. Rotate selector/set switch (2) to highlight AUTO PRESET (10).
5. Push selector/set switch (2) to start AUTO PRESET process.
   AUTO PRESET scans reception frequency, and allocates the stations with the strongest signals to CH1 to CH8. AM stations will be preset on CH1 to CH4 and FM stations on CH5 to CH8.
   During the scan, other operations on the audio system will be disabled.

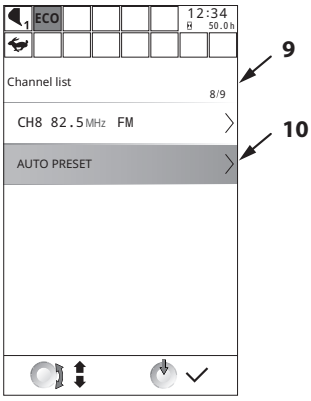

MDFY-MT-092-1 en_GB

Selecting Stations from Channel List (AM/FM)

This describes how to select stations from a preset stations.

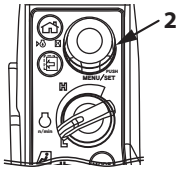

MDFY-01-094-7 ja

1. Display AM/FM audio screen (7).

   NOTE

   For how to display AM/FM audio screen (7), refer to "Source Selection and Audio Screen Display" (1-113).

2. Rotate selector/set switch (2) to highlight Channel List (8).

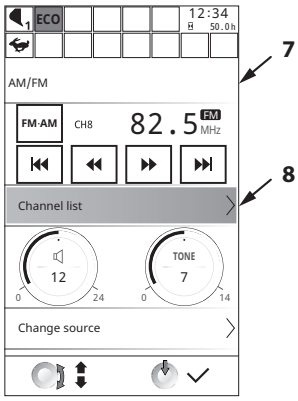

MDFY-MT-091-2 en_GB

3. Push selector/set switch (2) to display channel list screen (9).
   Rotate selector/set switch (2) to highlight the channel you wish to listen to.
4. Push selector/set switch (2) to finalize the channel.

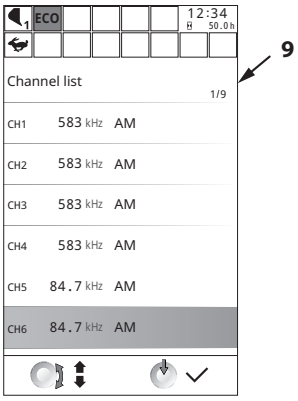

MDFY-MT-167-2 en_GB

Allocation to Numeric Keypad (Monitor)

Analog and digital radio stations can be allocated to keys of numeric keypad (4).
Allocations is performed using keys 1 to 8 on the numeric keypad.
Here, the procedure for allocating stations to the keys when turning from the monitor will be explained.

1. Display AM/FM audio screen (7).

   NOTE

   For how to display AM/FM audio screen (7), refer to "Change Source and Audio Screen Display" (1-113).

2. Tune to a frequency you wish to allocate.
3. Long-press one of the keys (1 to 8) on the numeric keypad.

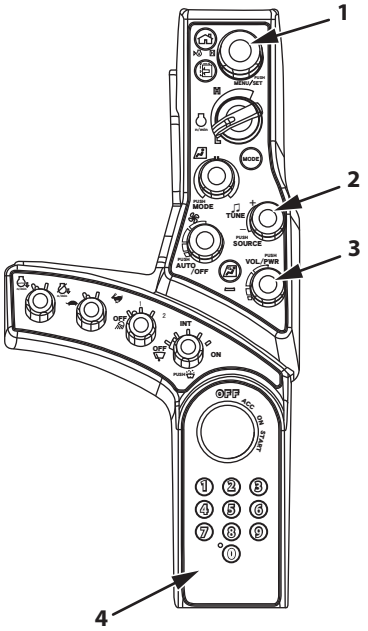

MDFY-01-002-7 ja

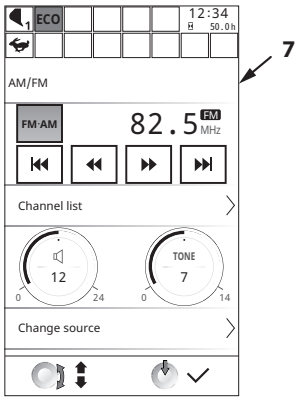

MDFY-MT-088-2 en_GB

Using DAB

The control screen for DAB is different to the one for AM/FM radio. The following explains how to use DAB.

Updating DAB Channel List

With DAB, to display channels, it is necessary to update and store the receivable channels in advance. The list of channels should be updated when the machine moves to a new area or the reception conditions change. It is not necessary to do this every time.

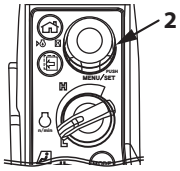

MDFY-01-094-7 ja

1. Display DAB audio screen (1).

   NOTE

   For how to display DAB audio screen (1), refer to "Source Selection and Audio Screen Display" (1-113).

2. Rotate selector/set switch (2) to highlight Update Channel List (3).

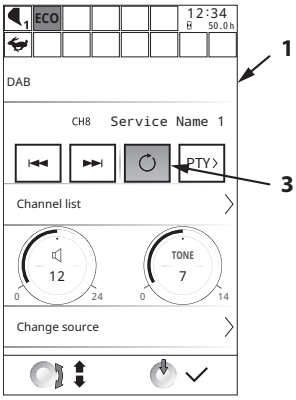

MDFY-MT-094-1 en_GB

3. When selector/set switch (2) is pushed, confirmation screen (4) is displayed.

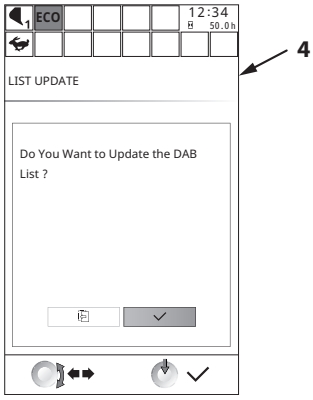

MDFY-MT-144-1 en_GB

4. Push selector/set switch (2) again to update the list of receivable channels.

Selecting DAB Channel (from Channel List)

Select the channel you wish to listen to from the channel list.

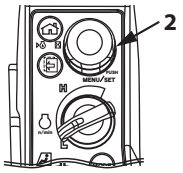

MDFY-01-094-7 ja

1. Display DAB audio screen (1).

   NOTE

   For how to display DAB audio screen (1), refer to "Source Selection and Audio Screen Display" (1-113).

2. Rotate selector/set switch (2) to highlight Channel List (3).

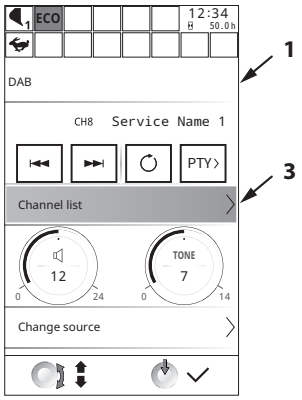

MDFY-MT-095-1 en_GB

3. Push selector/set switch (2) to display Channel List Screen (4) for the receivable channels.
4. Rotate selector/set switch (2) to highlight the desired channel (5).
5. Push selector/set switch (2) to finalize the channel.

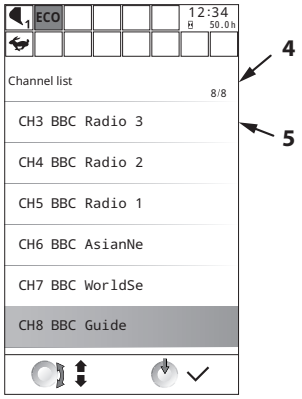

MDFY-MT-093-3 en_GB

Selecting DAB Channel (by Genre)

The channels stored for DAB are categorized by genre. It is possible to search by genre for a channel you wish to listen to.

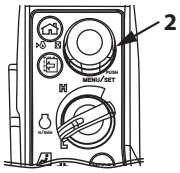

MDFY-01-094-7 ja

1. Display DAB audio screen (1).

   NOTE

   For how to display DAB audio screen (1), refer to "Source Selection and Audio Screen Display" (1-113).

2. From DAB screen (1), rotate selector/set switch (2) to highlight PTY (station type) (3).
3. Push selector/set switch (2) to display PTY screen (4).

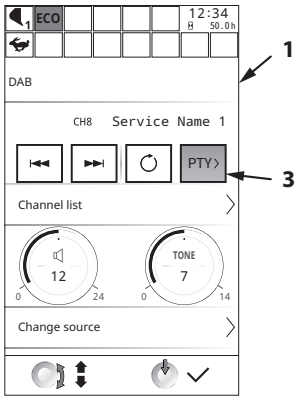

MDFY-MT-096-1 en_GB

4. Rotate selector/set switch (2) to highlight the desired genre (5).
5. Push selector/set switch (2) to display digital station list screen (6) for the selected genre.

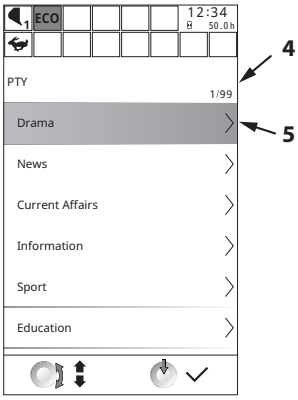

MDFY-MT-107-1 en_GB

6. Rotate selector/set switch (2) to highlight the desired digital station (7).
7. Push selector/set switch (2) to listen to the digital station.

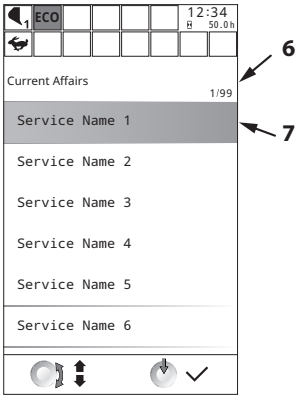

MDFY-MT-108-1 en_GB

NOTE

The selected digital station is displayed at (8).

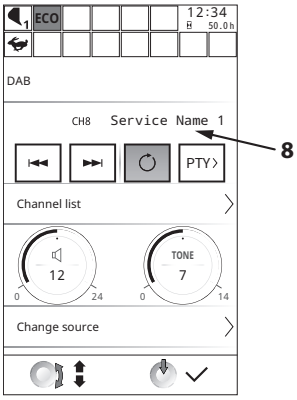

MDFY-MT-094-3 en_GB

Going Forwards and Backwards through DAB Channels

1. Switch the audio source and display DAB screen (1).

   NOTE

   For how to display DAB audio screen (1), refer to "Source Selection and Audio Screen Display" (1-113).

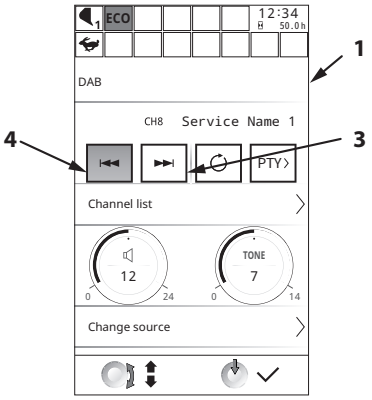

MDFY-MT-097-1 en_GB

2. From DAB audio screen (1), rotate selector/set switch (2) to highlight seek (3) or seek (4).
3. Push selector/set switch (2) to toggle between channels.
   Use seek (3) to move forwards through the channels forwards and seek (4) to go backwards.

Bluetooth® Connection

Connect Bluetooth® compatible external devices (portable music players etc.) to the machine's audio system and listen to music. Also, connect your cell phone to the audio system with Bluetooth® for handsfree calling. The following describes the monitor operations required on the machine for Bluetooth® connections (pairing).

NOTE

- *Preparation of the external device (cell phone, portable music player, etc.) is not covered here. For how to set up your external device, please refer to the operating instructions for the device.*
- *The machine audio system supports Bluetooth® Ver. 3.0.*
- *Some specific functions may be unavailable or may not work as expected in some operating environments, when connected to some external devices or some hardware/software.*

Bluetooth®Pairing with Bluetooth® Device

To connect over Bluetooth®, it is first necessary to register (pair with) the device in question.

1. Switch the audio source and display Bluetooth® screen (1).

   NOTE

   For how to display Bluetooth® screen (1), refer to "Source Selection and Audio Screen Display" (1-113).

2. From Bluetooth® screen (1), rotate selector/set switch (2) to highlight Pairing (3).

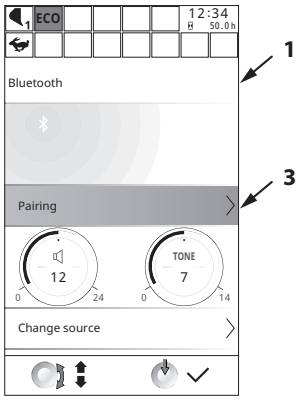

MDFY-MT-098-1 en_GB

3. Push selector/set switch (2) to go to pairing screen (4) and search for devices in the surrounding area which can be paired.
   When the system finds an available device, its serial number appears in central area (6).

   NOTE

   If canceling the pairing partway through, press back switch (10).

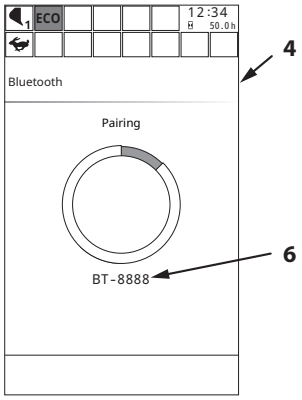

MDFY-MT-099-1 en_GB

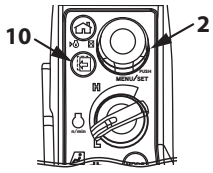

MDFY-01-094-6 ja

4. Once pairing is complete, Bluetooth® audio screen (1) is displayed, and icon (5) indicating that a connection has been made will appear.
   The profile is displayed at (7) on the Bluetooth® audio screen.

NOTE

To change the Bluetooth® device, repeat the pairing procedure with the new device.

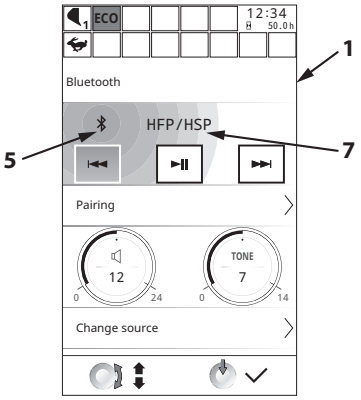

MDFY-MT-109-1 en_GB

Choosing Tracks with Bluetooth®

Control (skip forwards or backwards between tracks) the music you are listening to over the Bluetooth® connection.

1. Display Bluetooth® audio screen (1).

   NOTE

   For how to display Bluetooth® audio screen (1), refer to "Source Selection and Audio Screen Display" (1-113).

2. Rotate selector/set switch (2) to select skip forwards (4) or skip backwards (3). Push selector/set switch (2).

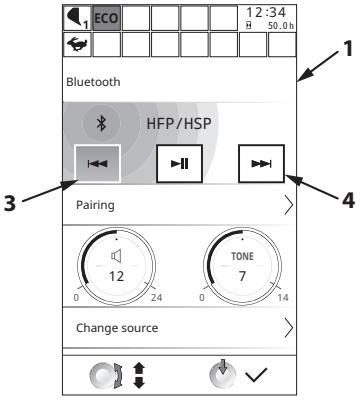

MDFY-MT-109-2 en_GB

Handsfree Calling with Bluetooth®

On receiving a call on a Bluetooth® paired cell phone, the operator can talk without touching the cell phone. When an incoming call is received on the cell phone, the incoming status is displayed on the monitor. The operator then able to perform the phone operations of “Accept”, “Decline” and “End Call” through operations on the numeric keypad.

CAUTION

Do not talk on a mobile phone while driving the machine.

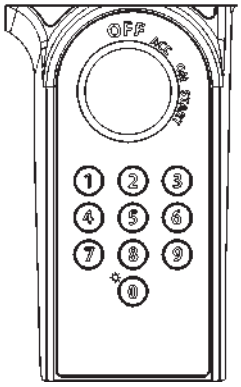

MDFY-01-017 ja

When an incoming call is received on the cell phone, the Incoming Call Screen is displayed.
The content of the screen and available operations are listed below.

1. Incoming telephone number
   This displays the telephone number of the incoming call.
2. Incoming icon
   Press 1 on the numeric keypad to talk.
3. Decline call icon
   Press 3 on the numeric keypad to decline the incoming call.

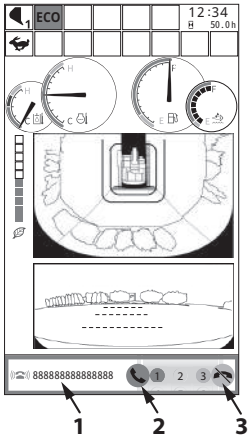

Incoming Call Screen

MDFY-MT-154-1 ja

During a call, the screen will change to the In-Call Screen.
The content of the screen and available operations are listed below.

4. In-call icon
   Shows connection to telephone network and status of the connection during the call.
5. End call icon.
   Cuts off the call.

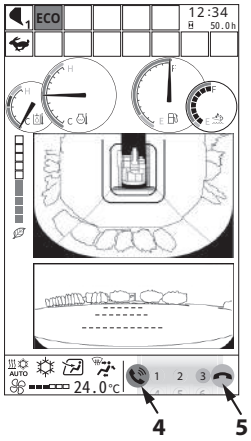

In-Call Screen

MDFY-MT-155-1 ja

Switch Panel (Illustration Content)

The following describes the names and layout of the switches provided on the switch panel. For explanations of the specific components, refer to page shown in ().

1- Back Switch (1-10)
2- Home Switch (1-10)
3- Selector/set Switch (1-10)
4- Temperature Control Switch/Mode Switch (1-95)
5- AUTO/OFF Switch/Fan Switch (1-95)
6- Audio Source Selector/Tuning Switch (1-108)
7- Power Switch/Volume Control Knob (1-108)
8- Engine Control Dial (1-131)
9- Auto-Idle Switch (1-131)
10- Travel Mode Switch (1-131)
11- Power Mode Switch (1-132)
12- Work Light Switch (1-132)
13- Wiper/Washer Switch (1-133)
14- Numeric Keypad (1-12)
15- Circulating/Fresh Air Control Switch (1-96)
16- Key Switch (1-136)
17- Skylight Wiper/Washer Switch (Optional) (1-135)

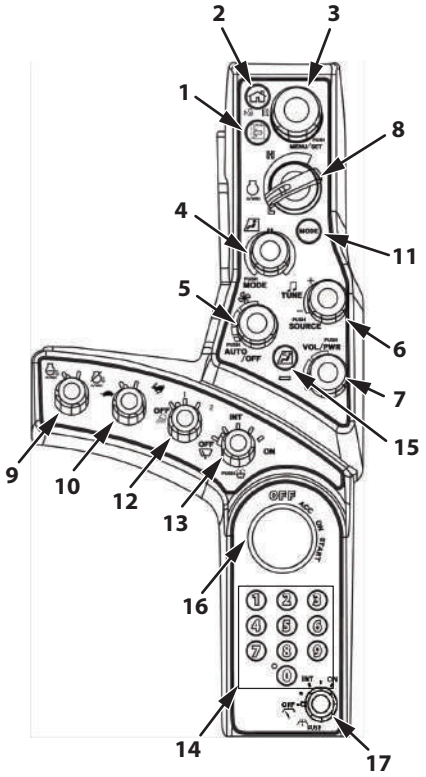

Switch Panel

MDFY-01-179-1 ja

Engine Control Dial

Use engine control dial (1) to adjust the engine speed.

H : Fast Idle
L : Slow Idle

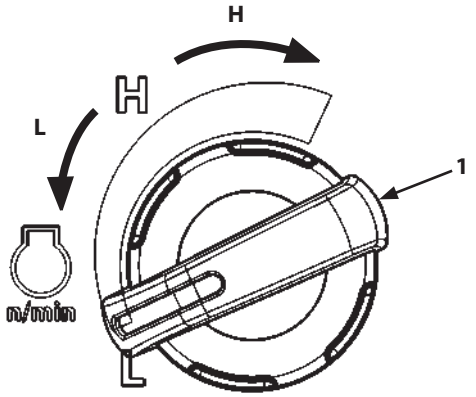

MDFY-01-010-1 ja

Auto-Idle Switch

Auto-idle switch (2) sets the engine speed control mode to either Auto-Idle ON or OFF.

- Auto-Idle
  Auto-Idle switch (2) counterclockwise to the ON position. Approximately 4 seconds after the control lever is put in neutral, the engine speed decreases to the auto-idle speed.
  This function reduces fuel consumption.
  When the auto-idle mode is selected, auto-idle indicator (3) on the monitor panel lights.

NOTE

- *Auto-idle control may not work until the end of the warm-up.*
- *The auto-idle control function does not operate when the aftertreatment device is regenerating.*

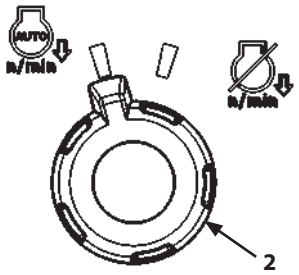

MDFY-01-011-1 ja

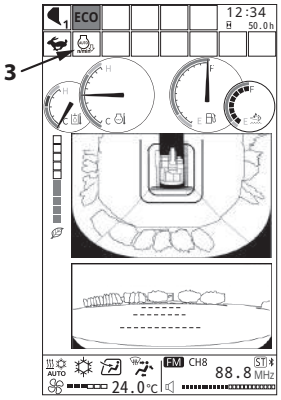

MDFY-MT-133-2 ja

Travel Mode Switch

The travel modes FAST and SLOW are selected by turning the travel mode switch.

:Fast

:Slow

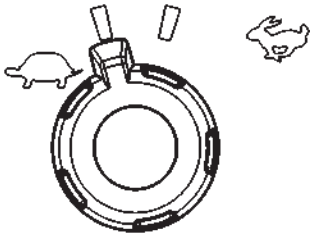

MDFY-01-012 ja

Power Mode Switch

The two engine speed modes, ECO or PWR mode are selected by operating the power mode switch.

- ECO (Economy) Mode
  Operate the machine in this mode when performing normal work.
  ECO is displayed on Power Mode Display (2).
- PWR (Power) Mode
  Use PWR (Power) mode when extra horsepower is needed.
  PWR is displayed on Power Mode Display (2).

NOTE

- *The system is set to ECO mode automatically when starting the engine. Set to PWR mode when necessary.*

MDFY-01-013 ja

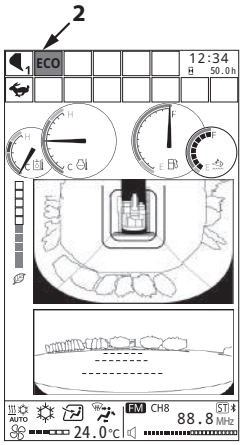

MDFY-MT-100-7 ja

Work Light Switch

The work light switch has the following positions.

Position 1	:	Turns ON work light (3) on the right side of the machine.
Position 2	:	Turns on work light (4) mounted on the boom and work light (3) on the right side of the machine. At the same time, the monitor changes to nighttime mode. In the case that work light (5) is mounted on the cab, cab-mounted work light (5) turns ON.
OFF position	:	Work lights (3), (4) and (5) turn off.

NOTE

When the key switch is turned OFF while the work light switch is in position 1, work light (3) stays ON for 30 seconds.
When the key switch is turned OFF while the work light switch is in position 2, work lights (3), (4) and (5) stay ON for 30 seconds.

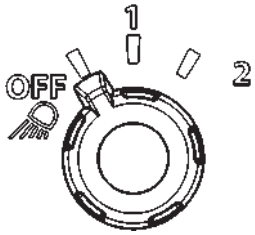

MDFY-01-014 ja

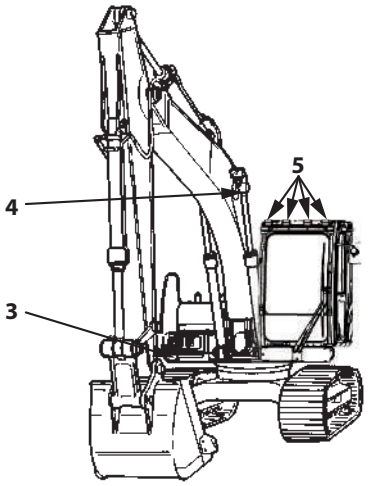

MDFY-01-037-1 ja

Wiper/Washer Switch

Wiper/washer switch (4) operates wiper (5) and the window washer.

- Wiper
  Turn wiper/washer switch (4) to the desired position to operate wiper (5).

OFF	Wiper (5) stops and automatically returns to its at rest position.
INT Position	Wiper (5) operates intermittently. The INT mode has three positions as shown below.
[INT(1):]	Wiper (5) operates at a 8-second interval.
[INT(2):]	Wiper (5) operates at a 6-second interval.
[INT(3):]	Wiper (5) operates at a 3-second interval.
ON	Wiper (5) operates continuously.

NOTE

When the front window (upper) is opened, wiper (5) will not operate. If the front window is opened while operating the wiper, the wiper stops.
Also, if the upper front window is not securely closed, the wiper will not operate. Securely close the upper front window before using the wiper.

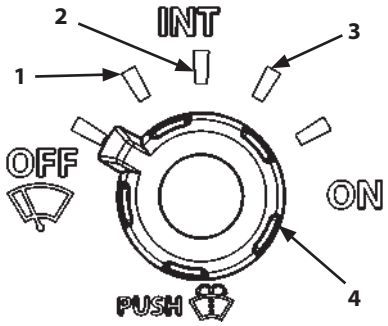

MDFY-01-015-1 ja

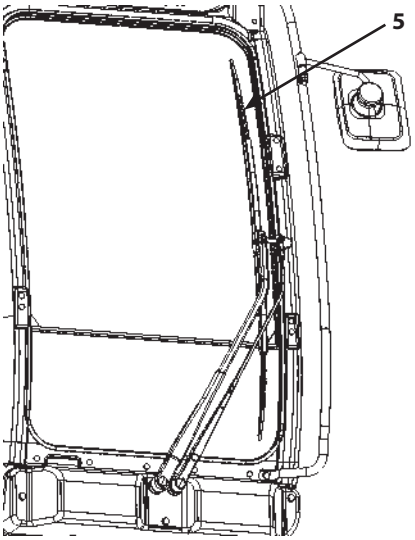

MDFY-01-016-1 ja

- Washer
  As long as wiper/washer switch (4) is pressed, it squirts washer fluid onto the window. When the wiper/washer switch is pressed for more than 2 seconds, wiper (5) operates continuously. When the wiper/washer switch (4) is released, the wiper automatically returns to its rest position. When the wiper is in an INT mode and the wiper/washer switch (4) is pressed, the wiper operates continuously.

  NOTE

  The wiper motor protection control stops wiper operation, to prevent it from becoming stuck when operated for a long period of time under high load. If the wiper stops, do not change the arm position; wait several minutes until the wiper starts operating again.

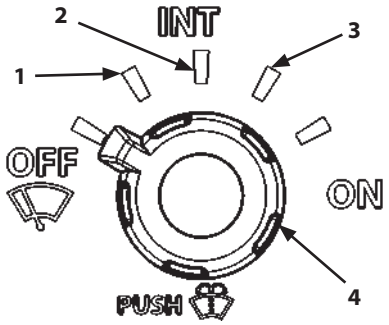

MDFY-01-015-1 ja

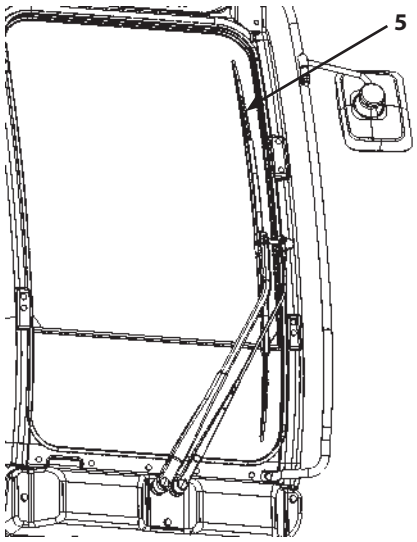

MDFY-01-016-1 ja

IMPORTANT

- **If wiper (5) has frozen and fails to move, do not press and hold down switch (4). Doing so may damage the wiper or exhaust the battery.**
- **If wiper (5) has frozen and is stuck to the front window glass, throw some lukewarm water over the wiper, or operate the air conditioner in defroster mode. Attempting to force the wiper to operate without warming the front window glass may damage the wiper.**
- **If working in snow or cold conditions, do not use the window washer until the front window glass has warmed up. If the washer is used under such conditions, the washer fluid may freeze and adversely affect visibility.**

Skylight Wiper/Washer Switch (Optional)

- Wiper
  Turn skylight wiper/washer switch (4) to the desired position to operate skylight wiper (5).

OFF position	Skylight wiper (5) stops and automatically returns to its at rest position.
INT Position	Skylight wiper (5) operates intermittently. The INT mode has 3 positions as shown below.
[INT(1):]	Skylight wiper (5) operates at 8-second intervals.
[INT(2):]	Skylight wiper (5) operates at 6-second intervals.
[INT(3):]	Skylight wiper (5) operates at 3-second intervals.
ON position	Skylight wiper (5) operates continuously.

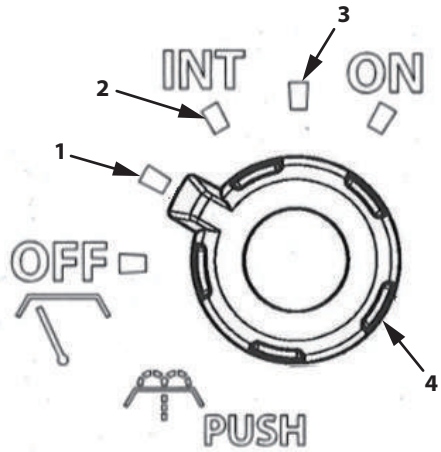

MDFY-01-180-1 ja

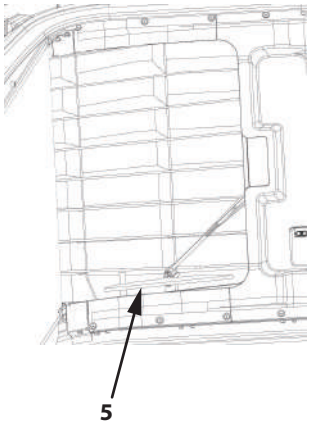

MDFY-01-181-1 ja

- Washer
  Push and hold skylight wiper/washer switch (4) to squirt washer fluid onto the skylight window. When skylight wiper/washer switch (4) is pressed for more than 2 seconds, the skylight wiper (5) operates continuously. When skylight wiper/washer switch (4) is released, the wiper automatically returns to its at rest position.
  Also, note that when operating skylight wiper (5) in INT mode and skylight wiper/washer switch (4) is pressed, the wiper operates continuously.

Key Switch

1- OFF (Engine Off)
2- ACC (Horn, Radio etc.)
3- ON (Engine ON)
4- START (Engine Start)

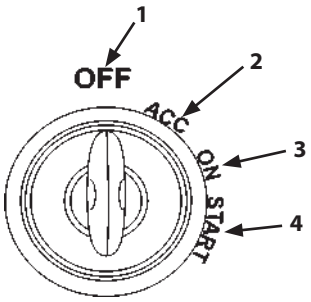

MDCD-01-030-1 ja

Switch Panel (for Optional Equipments)

The position of optional switches (1) varies with the kind of optional devices that the machine is equipped with. Before using the switches, confirm which types of optional devices the machine is equipped with. Raise the armrest when operating the optional switch. All available optional devices are shown below.

- Seat Heater Switch
- Rear Light Switch
- Perimeter Lights Switch
- Rotating Light Switch
- Overload Alarm Switch
- Quick Coupler Switch
- Electrical Control Main Switch

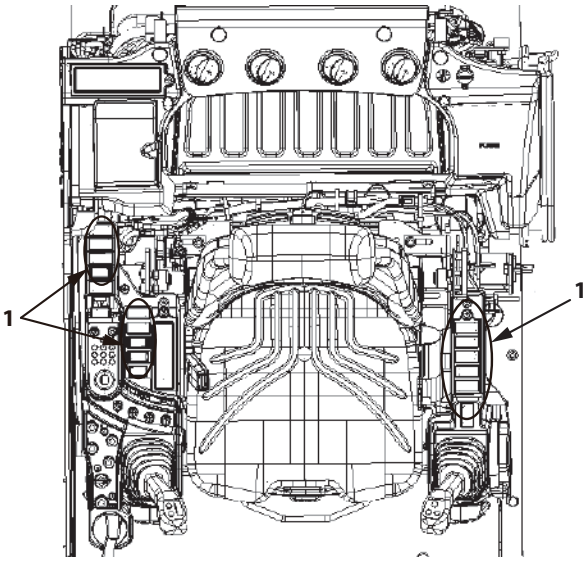

MDFY-01-036-2 ja

Seat Heater Switch

When seat heater switch (1) is turned ON, the seat and/or backrest are heated to warm them up.
When the temperature of the seat and/or backrest reaches its specified temperature, heating turns off automatically.

M1U1-01-011-3 ja

WARNING

- **Use with seat wet or something poke into seat could cause electrical shock.**
  - **Be careful when handling water or drinking water.**
  - **Do not use if clothes are extremely wet.**
  - **Do not poke the seat with a sharp object or put anything heavy with protruding parts on it.**

CAUTION

- **Certain people as noted below, could be at risk of a low temperature burn, so should be careful during use.**
  - **People with delicate skin**
  - **People suffering from fatigue**
  - **People under excessive drinking or medication that could cause sleepiness (sleeping pills, cold medicines, etc.)**
- **Continuous use could cause low temperature burn to people.**
- **Use with blanket or cushion which may retain heat could cause abnormal heating of the seat.**

IMPORTANT

- **To prevent damage, do not poke the seat with sharp objects or put anything heavy with protruding parts on the seat.**
- **If a liquid like water or a drink is spilled on the seat, wipe off with a soft cloth and make sure the seat is dry before using again.**
- **If the seat is abnormally hot, stop use and contact your authorized dealer.**

NOTE

The point where heated varies with the type of seat.

Rear Light Switch (Optional)

When rear light switch (2) is turned ON, the rear light at the rear of the cab roof comes ON.
If the machine is equipped with both perimeter lights and rear light, the perimeter lights will also turn on.

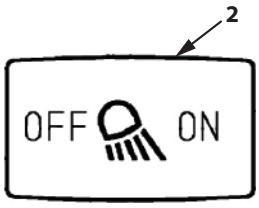

MDFY-01-085-1 ja

Perimeter Lights Switch (Optional)

Pressing perimeter lights switch (2) to the ON side turns ON the lights (4) on the left, right and rear of the machine.
If the machine is equipped with both perimeter lights and rear lights, the rear light will also turn on.

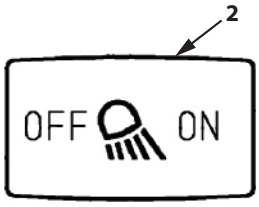

MDFY-01-085-1 ja

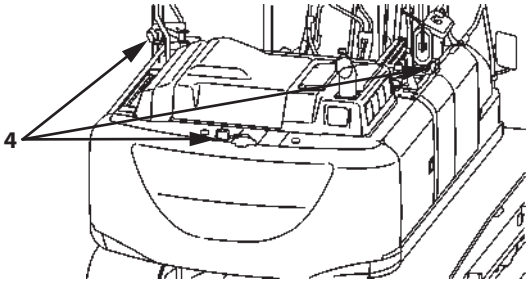

MDC1-01-572-1 ja

Rotating Lamp Switch (Optional)

When rotating lamp switch (7) is turned ON, the rotating lamp provided at the rear on the cab roof comes ON.

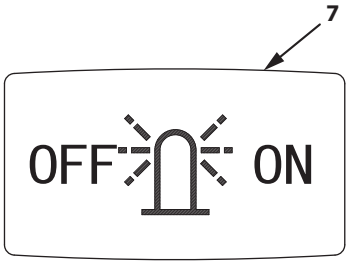

M1U1-01-012-1 ja

Overload Alarm Switch

During lifting load work with overload alarm switch (3) ON, if overloading is detected, the buzzer sounds and overload alarm indicator (4) on the multi-monitor comes ON. Turn overload alarm switch (3) OFF to deactivate the overload alarm system function.

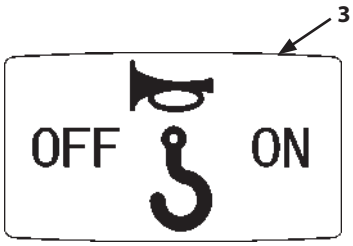

MDEQ-01-054-2 ja

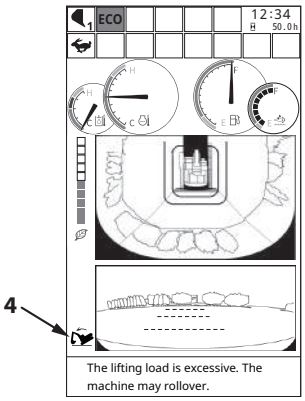

MDFY-MT-151-1 en_GB

Quick Coupler Switch

Quick coupler switch (2) is used when attach/detaching an attachment that uses a quick coupler.
To attach an attachment to the quick coupler, press quick coupler switch (2) to the LOCK side (A).
To detach an attachment mounted to the quick coupler, while pressing interlock (6) of quick coupler switch (2), press it to the UNLOCK side (B). As long as it is pressed to the UNLOCK side (B), the buzzer sounds and the warning lamp (5) of quick coupler switch (2) lights. The attachment can be attach/detached while the buzzer is sounding. For instructions on how to attach/detach attachments that use the quick coupler, refer to Chapter 13 Quick Couplers.

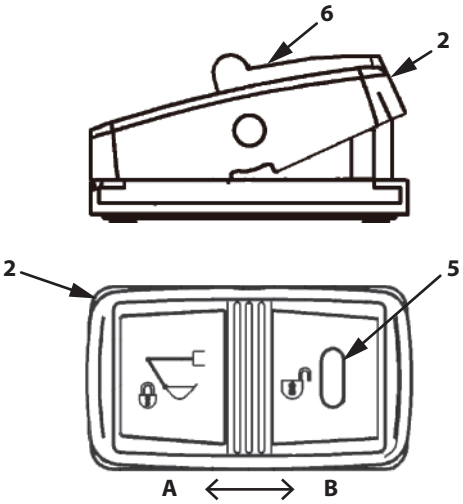

MDFY-13-034-2 ja

A: LOCK
B: UNLOCK

Electrical Control Main Switch

This is a switch for enabling and disabling the attachment switches (7), (8) mounted on the control lever.

CAUTION

When there is no need to use the electrical control (attachment switches), turn them OFF to avoid operating it accidentally.

IMPORTANT

The attachment switches (7), (8) are operable only when indicator (6) of electrical control main switch (5) is lit.

How to Use Screens

Turning electrical control main switch (5) ON (indicator (6) side) will cause indicator (6) to light up.
When indicator (6) is lit, the attachment function is enabled and the attachment switches (7), (8) can be used.
To disable this function, set electrical control main switch (5) to the "OFF" side (9). The indicator (6) goes off, and the attachment switches (7), (8) are disabled.

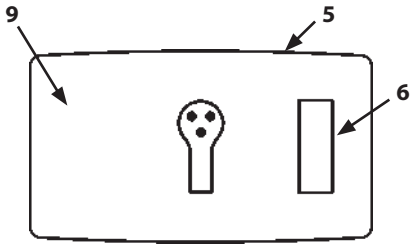

MDAA-01-311-5 ja

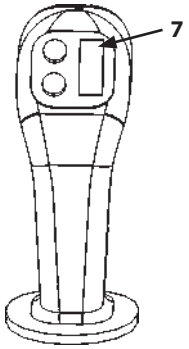

Left Control Lever

MCGB-01-029-2 ja

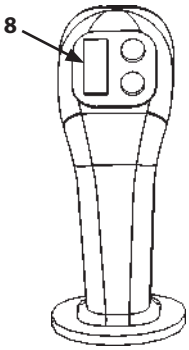

Right Control Lever

MCGB-01-030-3 ja

Control Lever

AUX Function Lever 1

1. PBLI (Push Button Low Idle)
2. Power Boost
3. Attachment Switch (Assist Operation)
4. Auxiliary
5. Horn
6. Quick Wiper
7. Auxiliary

NOTE

- *Switch (1) can be configured to function as a button for toggling PBLI (Push Button Low Idle) by making settings on the monitor. For details on PBLI, refer to "PBLI"(1-83).*
- *To enable the attachment switch, the electrical control main switch must be turned ON. For details, refer to "Electrical Control Main Switch" (1-141).*

CAUTION

- **These switches are provided for operating attachments of this machine. HITACHI shall not bear responsibility for any human injury, malfunction and/or physical loss or damage incurred by unauthorized application or use of unauthorized attachments, optional parts or modified switches, which will void Hitachi Warranty Policy.**
- **Before using this switch, thoroughly read the operation manual of the corresponding attachment and check the operation of each function in a safe area.**
- **Before operating an attachment with this switch, confirm the requirements for safe and proper mounting and operation of the attachment with its manufacturer's distributor and observe them.**

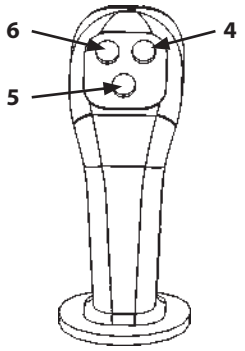

Left Control Lever

MDAA-01-337-1 ja

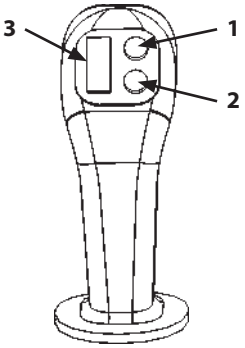

Right Control Lever

MCGB-01-030-1 ja

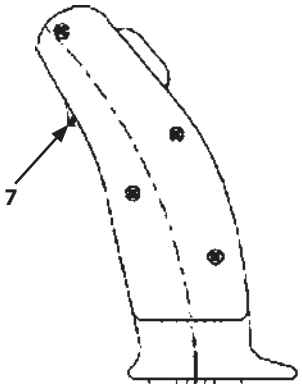

Right Control Lever

MDFY-01-021-1 ja

AUX Function Lever 2 (Optional)

1. PBLI (Push Button Low Idle)
2. Power Boost
3. Attachment Switch (Assist Operation)
4. Attachment Switch (Main Operation)
5. Horn
6. Quick Wiper
7. Auxiliary

NOTE

- *Switch (1) can be configured to function as a button for toggling PBLI (Push Button Low Idle) by making settings on the monitor. For details on PBLI, refer to "PBLI"(1-83).*
- *To enable the attachment switch, the electrical control main switch must be turned ON. For details, refer to "Electrical Control Main Switch" (1-141).*

CAUTION

- **These switches are provided for operating attachments of this machine. HITACHI does not bear responsibility for any physical injury, malfunction and/or physical loss or damage incurred due to other uses of or modification of the performance or shape of switches.**
- **Before using this switch, thoroughly read the operation manual of the corresponding attachment and check the operation of each function in a safe area.**
- **Before operating an attachment with this switch, confirm the requirements for safe and proper mounting and operation of the attachment with its manufacturer's distributor and observe them.**

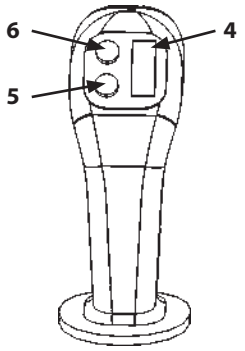

Left Control Lever

MCGB-01-029-1 ja

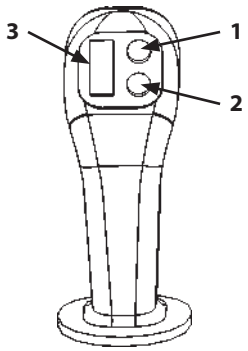

Right Control Lever

MCGB-01-030-1 ja

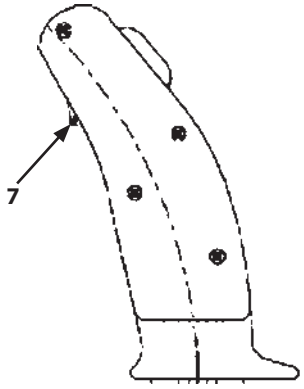

Right Control Lever

MDFY-01-021-1 ja

Power Boost Switch

Power boost switch (2) is provided on the top of the right control lever.
While pressing power boost switch (2), the maximum digging power is boosted within approximately 8 seconds to increase work capacity.

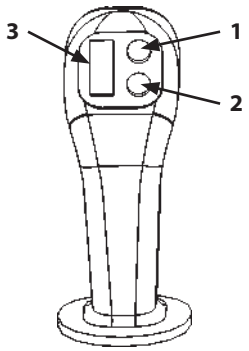

Right Control Lever

MCGB-01-030-1 ja

Horn Switch

Horn switch (5) is provided on the top of the left control lever.
The horn sounds continuously as long as switch (5) is pressed.

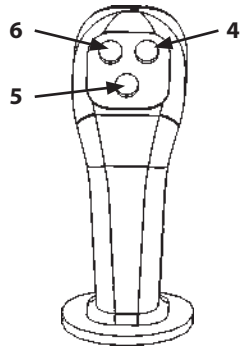

Left Control Lever (Standard)

MDAA-01-337-1 ja

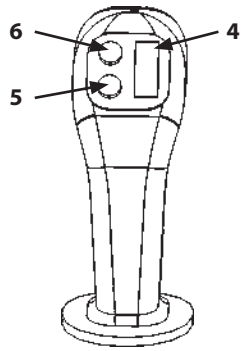

Left Control Lever (Option)

MCGB-01-029-1 ja

Quick Wiper

Each push of quick wiper switch (6) will operate the wiper.
Use this function when you wish to operate the wiper briefly.

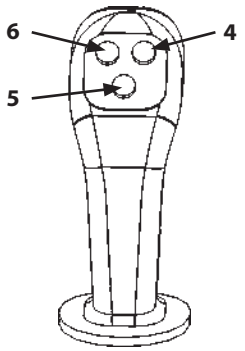

Left Control Lever (Standard)

MDAA-01-337-1 ja

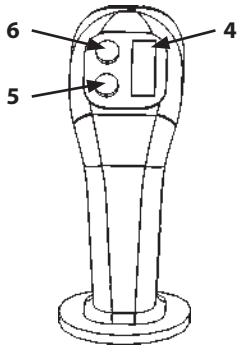

Left Control Lever (Optional)

MCGB-01-029-1 ja

Facilities in Operator's Station

12/24V Power Socket

12V Power Socket

CAUTION

Do not power anything other than a genuine Hitachi Construction Machinery electrical device from the power socket.

IMPORTANT

- **Power socket (2) is for 12V DC only and can be used with accessories having a power rating up to 120W. Failing to observe these restrictions on voltage and power may damage the battery and accessory.**
- **Do not use power for long periods of time with the engine stopped. Doing so may discharge the batteries.**

1. Insert key (1) into the key switch and turn it to the ON position.
2. Open the socket cap and plug the accessory into socket (2).
3. After use, fit the cap securely to close the socket.

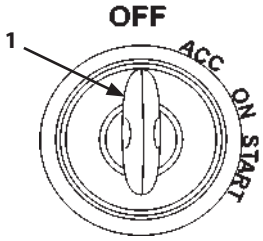

MDCD-01-030-2 ja

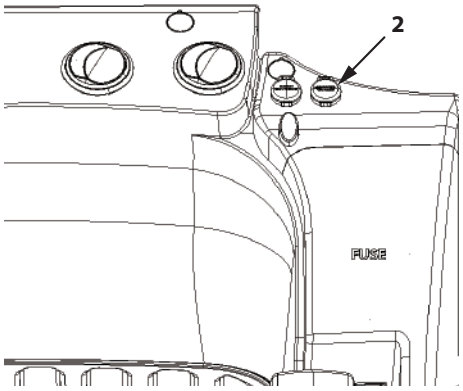

MDFY-01-076-2 ja

24V Power Socket

CAUTION

Do not power anything other than a genuine Hitachi Construction Machinery electrical device from the power socket.

IMPORTANT

- **Power socket (2) is for 24V DC only and can be used with accessories having a power rating up to 120W. Failing to observe these restrictions on voltage and power may damage the battery and accessory.**
- **Do not use power for long periods of time with the engine stopped. Doing so may discharge the batteries.**

1. Insert key (1) into the key switch and turn it to the ON position.
2. Open the socket cap and plug the accessory into socket (2).
3. After use, fit the cap securely to close the socket.

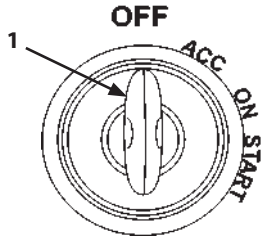

MDCD-01-030-2 ja

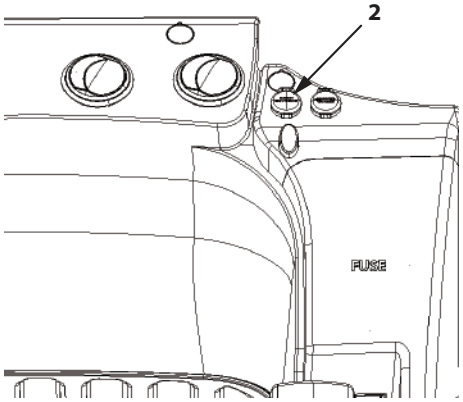

MDFY-01-076-1 ja

USB Power Supply

Use the USB power supply for operating or charging compatible mobile or electronic devices.

IMPORTANT

The USB power supply of the machine can be used at up to DC 5V.
Its maximum rated capacity is 5 V/2 A.
Connecting a device that exceeds the rated capacity activates the protection function, so the device may fail to operate or charge.
USB devices with A-type terminals may be used.
A device with incompatible terminals will not operate or charge, and may cause damage.
It works only as a power supply and cannot be used for data transfer or communications.
A special cable may be required to connect to some devices. In such cases, use the required cable.
Do not use for a long time with the engine off.
Doing so may discharge the batteries.
Remove the device promptly after recharging is complete.
As it is not waterproof, do not get any liquids, such as water on it.
Take all due care as warranty repairs do not cover damage to connected devices or corruption or loss of data.
Do not connect a broken device. Smoke and/or fire may result.
Never insert metal or any foreign object into the USB terminals. Electrical shock and/or damage will result.
Be careful when a cable is connected. Tripping over it may result in injury and/or damage to the device.

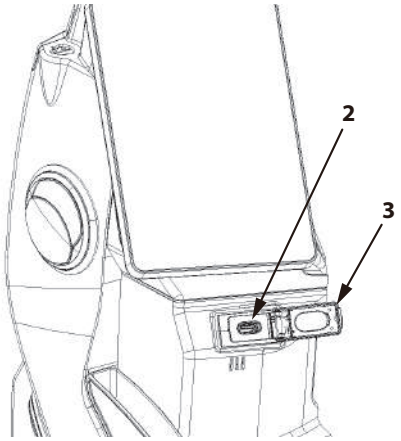

MDFY-01-110-1 ja

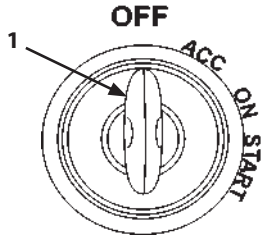

MDCD-01-030-2 ja

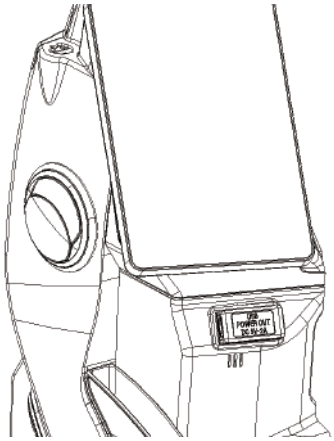

MDFY-01-111 ja

How to Use

1. Remove cap (3) from USB power supply (2).
2. Plug in the USB connector of the device you wish to connect.
3. Turn key switch (1) to the ON position. Use the USB power supply in this state.
4. After use, remove the USB connector of the connecting device and cover the USB power supply (2) using cap (3).

Room Light Switch

Push switch (1) on the room light to turn the room light ON.

ON position	:	The room light comes and stays ON. (The light does not turn ON while the key OFF.)
OFF position	:	The room light goes OFF.
Neutral	:	The room light turns ON as the cab door is opened. The room light automatically goes off after 30 seconds. It also turns OFF automatically when the engine starts. (The room light turns ON while the key switch is OFF.)

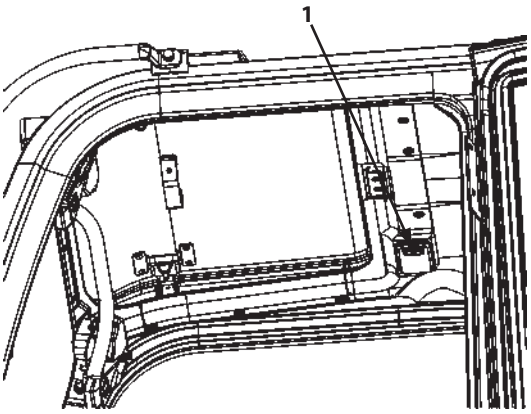

MDAA-01-305-1 ja

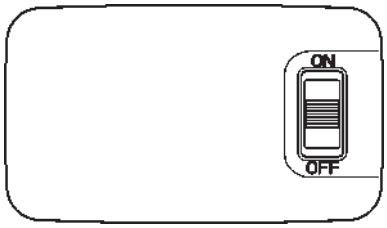

MDAA-01-318 ja

Pilot Shut-off Lever

Pilot shut-off lever (1) functions to prevent the machine from being mistakenly operated when the operator accidentally touches the control lever or pedals when getting on or off the machine.

WARNING

- **To lock it, put pilot shut-off lever (1) securely in the LOCK position. If in an intermediate position, it is not locked, which is dangerous.**
- **When leaving the operator's seat, always stop the engine and put pilot shut-off lever (1) in the LOCK position.**
- **Always set the pilot shut-off lever to the LOCK position before transporting the machine and leaving the machine.**
- **Confirm that the pilot shut-off lever is in the LOCK position before starting the engine. The engine will not start if it is in any position other than the LOCK position.**
- **If the pilot shut-off lever happens a problem, have it repaired without delay. For repairs, contact your authorized dealer.**

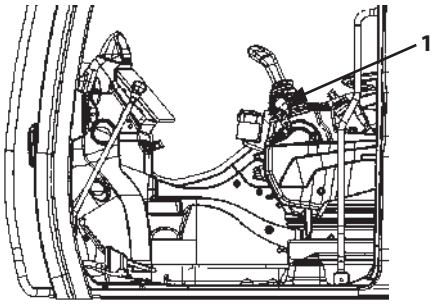

MDFY-01-022-1 ja

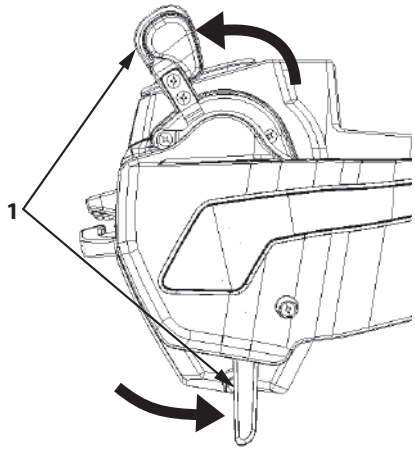

LOCK position

MDFY-01-088-1 ja

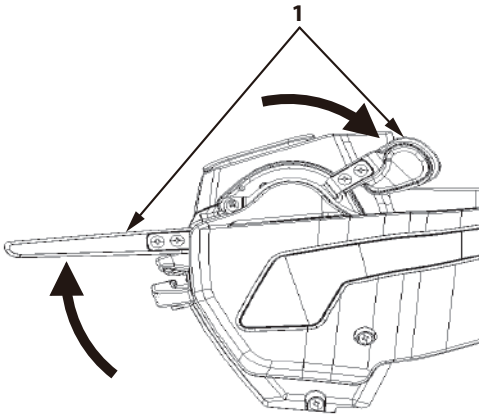

UNLOCK Position

MDFY-01-113-1 ja

Control Lever Auto-Lock

This function keeps the machine from operating to prevent it from moving due to an unintended operator action, i.e. accidentally unlocking the pilot shut-off lever (1) while the control lever is engaged because the operator accidentally snagged it with a piece of clothing.

IMPORTANT

The name plate (3) is mounted inside the operator's station on machines equipped with the control lever auto-lock.

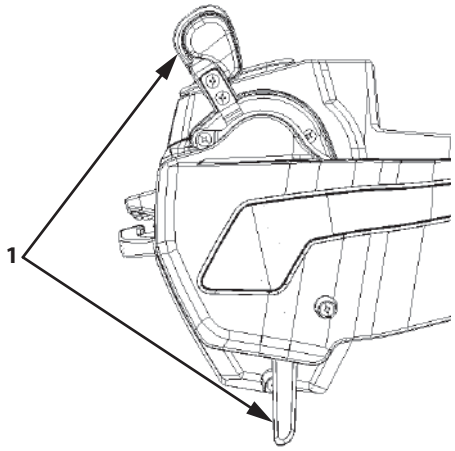

MDFY-01-088-2 ja

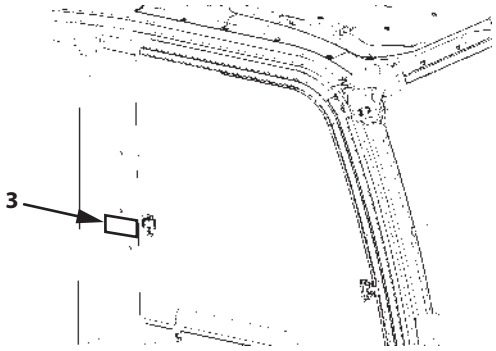

MDFY-01-184-1 ja

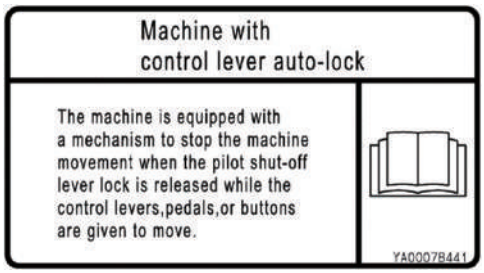

Nameplate (3)

MDFY-01-185 en_GB

WARNING

- **The control lever auto-lock function helps to inhibit unintentional operation of the machine by the operator. By no means will the function stop the machine in every situation.**
- **When moving the machine, make sure all the control levers are in neutral before unlocking the pilot shut-off lever (1).**

When this function is activated, the front attachment, swing, travel and attachment operations are automatically locked, the icon (2), in the figure, lights on the monitor and a buzzer sounds.

Once this function is activated, the machine cannot be moved even if the control lever is operated with the pilot shut-off lever (1) still in the "UNLOCK Position".
To resume operating the machine, return the pilot shut-off lever (1) to the "LOCK Position", make sure that the control lever is in neutral and then put the pilot shut-off lever in the "UNLOCK Position".

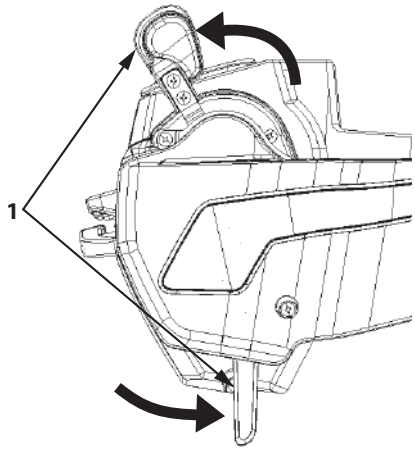

LOCK position

MDFY-01-088-1 ja

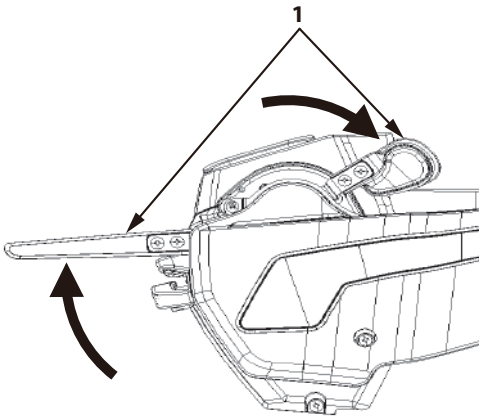

UNLOCK Position

MDFY-01-113-1 ja

WARNING

- **The control lever auto-lock function does not guarantee a full stop of the machine. When performing travel and attachment operations, in some circumstances, the machine may move a certain amount before stopping after the function is activated.**
- **When performing travel and attachment operations, the time it takes to stop the machine depends on the hydraulic oil temperature. The colder the hydraulic oil, the longer it takes to stop, so warm up the machine fully when it is cold.**
- **This function does not operate below a certain temperature when the hydraulic oil is cold. Icon (2) flashes on the monitor in conditions under which this function will not operate.**
- **When a travel pilot hose or an attachment pilot hose is disconnected, this function may not operate properly as system response deteriorates due to the effect of the air. After connecting the hose, warm the machine fully and bleed air from the pilot circuit. For information on the air bleeding procedure, refer to "Bleeding Air from the Hydraulic System".**

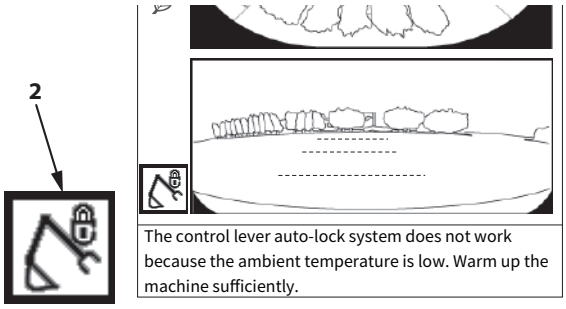

Warning Icon

MDF3-01-051-1 en_GB

Engine Stop Switch

If the engine does not stop even though the key switch is turned OFF, due to failure of the machine, move switch (2) located at the front-left side of the seat stand downward to stop the engine.

After operating switch (2), return it to the up position.

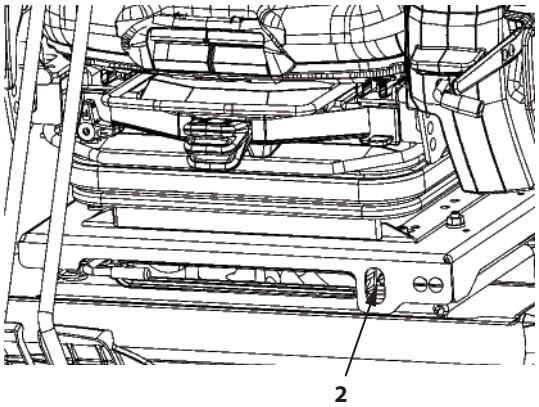

MDFY-01-024-1 ja

Magazine Rack

Magazine rack (1) can hold documents of up to A4 size, such as the Operator's Manual in portrait orientation. For documents larger than A4, use tray (2).

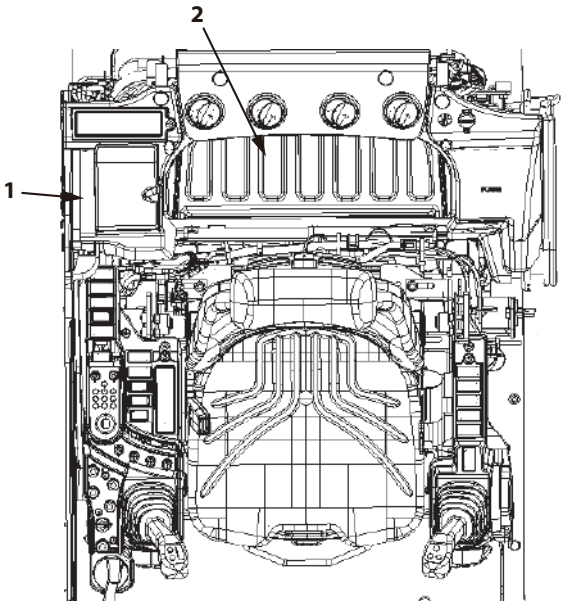

MDFY-01-036-4 ja

Net-Use Hook

This is a hook on which to hang a net for preventing items place on tray (2) from flying off due to vibration or impacts while working.

NOTE

The machine is not supplied with a net.
Please prepare and use a net suitable for the size of your baggage.

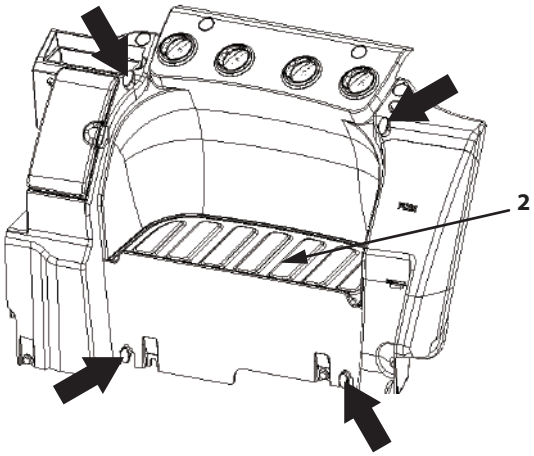

MDFY-01-114-1 ja

Drink Holder

Two drink holders (1)(2) are provided in the cab. The holders can be used in different ways to suit the size of drink, ease of use, etc.

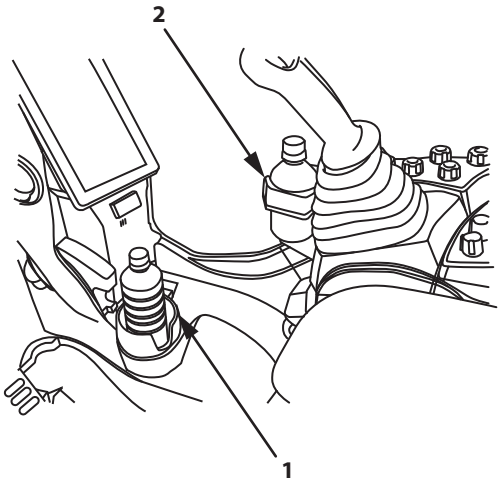

MDFY-01-116-1 ja

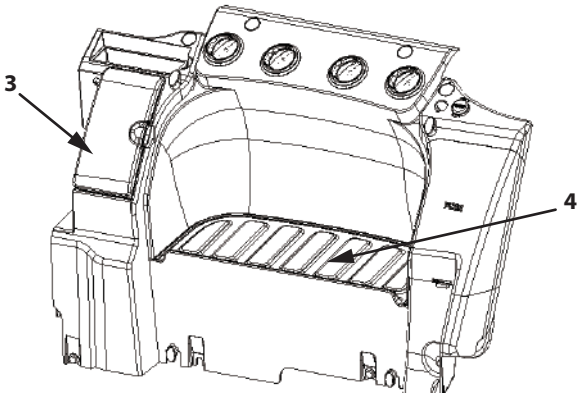

MDFY-01-114-2 ja

CAUTION

- **If a large container is put into drink holder (2), it may interfere with operations of the front attachment control levers.**
  When using a large container, use holder (1), put it in glove compartment (3) in the rear of the operator's station, or use tray (4).
- **When using the drink holders, make sure that the drink container is stable and secure.**
  If the container is not fully inserted, it may slide out of the holder, spilling the drink and interfering with driving of the machine.
  When conducting work that involves large amounts of vibration, take care to ensure that the drink container does jump out of its holder.

IMPORTANT

While working, always keep the lid on your drink in the holder. If a drink spills on the electronic equipment, it may cause a fault.

NOTE

Drink holder (1) can be removed for cleaning.
For how, refer to Cleaning the Drink Holder in Inspections and Maintenance.

Fuse Box

The fuse boxes (2 boxes) are located to the left rear of the operator's seat.
The box on the left when facing the boxes is fuse box (A). The one on the right is fuse box (B).

Fuse box (A)

ZX120-7 class

10- CONTROLLER 5 A	20- OPT.3 (BATT) 5 A
9- BACKUP 10 A	19- DCDC 30 A
8- DCDC-IG 5 A	18- IDLE STOP 5 A
7- START 5 A	17- POWER ON 5 A
6- OPT.2 (ALT) 20 A	16- HORN 10 A
5- OPT.1 (ALT) 5 A	15- AUX 10 A
4- SOLENOID 20 A	14- MONITOR 5 A
3- WIPER 15 A	13- RADIO 5 A
2- HEATER 20 A	12- 24 V/LIGHTER 5 A
1- LAMP 20 A	11- FUEL PUMP 5 A

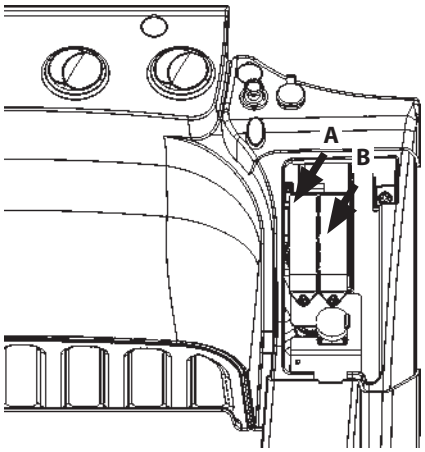

MDFY-01-025-1 ja

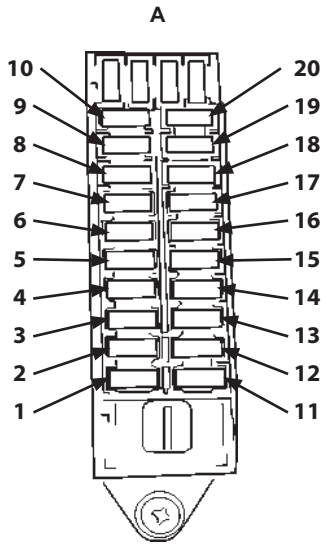

M1GR-01-003-1 ja

ZX160-7, 180-7 class

10- CONTROLLER
5 A

9- BACKUP
10 A

8- ECU
30 A

7- START
5 A

6- OPT.2 (ALT)
20 A

5- OPT.1 (ALT)
5 A

4- SOLENOID
20 A

3- HEATER
20 A

2- WIPER
15 A

1- LAMP
20 A

20- OPT.3 (BATT)
5 A

19- HORN
10 A

18- IDLE STOP
5 A

17- POWER ON
5 A

16- MONITOR
5 A

15- AUX
10 A

14- GLOW RELAY
30 A

13- 24 V/LIGHTER
5 A

12- FUEL PUMP
5 A

11- RADIO
5 A

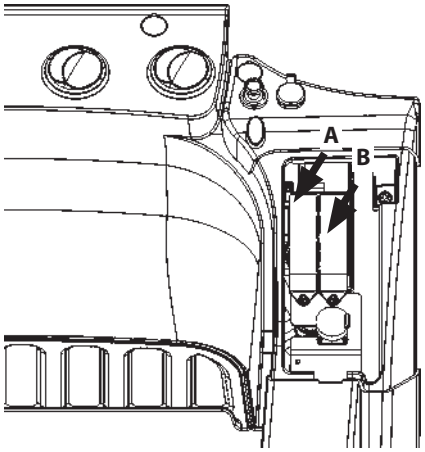

MDFY-01-025-1 ja

A

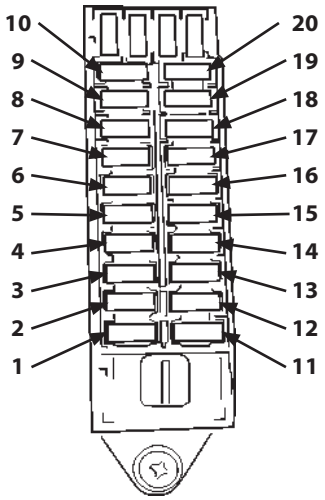

M1GR-01-003-1 ja

ZX200-7, 240-7, 300-7, 330-7 class

10- CONTROLLER 5 A	20- OPT.3 (BATT) 5 A
9- BACKUP 10 A	19- HORN 10 A
8- ECU 30 A	18- IDLE STOP 5 A
7- START 5 A	17- POWER ON 5 A
6- OPT.2 (ALT) 20 A	16- GLOW RELAY 5 A
5- OPT.1 (ALT) 5 A	15- AUX 10 A
4- SOLENOID 20 A	14- MONITOR 5 A
3- HEATER 20 A	13- RADIO 5 A
2- WIPER 15 A	12- LIGHTER/SOKET (24 V) 5 A
1- LAMP 20 A	11- FUEL PUMP 5 A

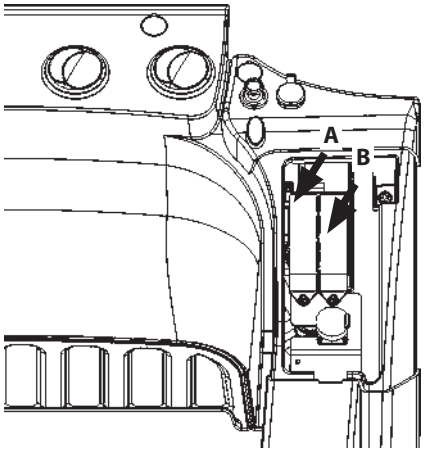

MDFY-01-025-1 ja

A

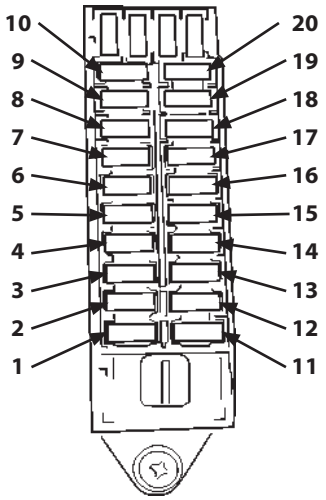

M1GR-01-003-1 ja

Fuse box (B)

ZX120-7 class

30- A/F HEATER (12 V)
15 A

29- ECU_MAIN (12 V)
20 A

28- [GN[(12 V)
15 A

27- 12V_SOCKET
10 A

26- AERIAL_C/U
5 A

25- MG_POWER
10 A

24- EL_POWER
10 A

23- 12V_UNIT
20 A

22- CAB_LAMP_REAR
10 A

21- SEAT_HEATER
10 A

40- PI_SHUT-OFF
5 A

39- USB
5 A

38- AUX_3
10 A

37- AUX_2
10 A

36- DISCONNECT_BACK-UP
5 A

35- EDU
20 A

34- ECU_BACKUP (12 V)
3 A

33- WARNING_LAMP
10 A

32- SEAT_COMPR
10 A

31- QUICK_COUPLER
5 A

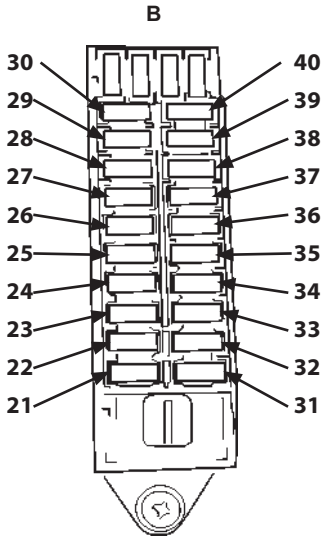

M1GR-01-003-2 ja

ZX160-7, 180-7 class

30- EL_POWER
10 A

29- MG_POWER
10 A

28- STARTER
5 A

27- SOCKET (12 V)
10 A

26- AERIAL_C/U (12 V)
5 A

25- PI_SHUT-OFF
5 A

24- SENSOR_UNIT
10 A

23- 12V_UNIT
20 A

22- CAB_LAMP_REAR
10 A

21- SEAT_HEATER
10 A

40- -

39- USB
5 A

38- AUX_3
10 A

37- AUX_2
10 A

36- DISCONNECT_BACK-UP
5 A

35- DCU
20 A

34- UREA_HEAT
20 A

33- WARNING_LAMP
10 A

32- SEAT_COMPR
10 A

31- QUICK_COUPLER
5 A

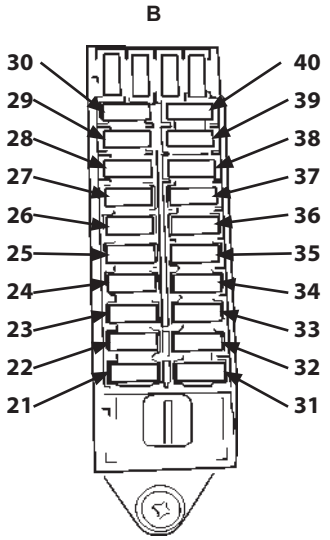

M1GR-01-003-2 ja

ZX200-7, 240-7, 300-7, 330-7 class

30-	-	40-	-
29-	EL POWER 10 A	39-	USB (12 V) 5 A
28-	MG POWER 10 A	38-	AUX 3 10 A
27-	SOKET (12 V) 10 A	37-	AUX 2 10 A
26-	AERIAL C/O (12 V) 5A	36-	DISCONNECT BACT UP 5 A
25-	PI SHUT-OFF 5 A	35-	UREA HEAT 20 A
24-	SENSOR UNIT 10 A	34-	DCU 20 A
23-	12 V UNIT 20 A	33-	WARNING LAMP 10 A
22-	CAB LAMP REAR 10 A	32-	SEAT COMPR 10 A
21-	SEAT HEATER 10 A	31-	QUICK_COUPLER 5 A

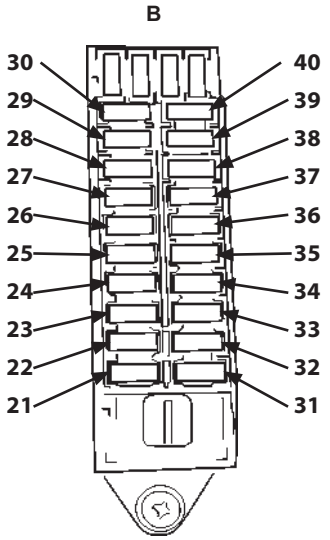

M1GR-01-003-2 ja

Installing a Fire Extinguisher (Optional)

A fire extinguisher (1) can be installed in the left rear corner of the cab. Consult your authorized dealer to install one.

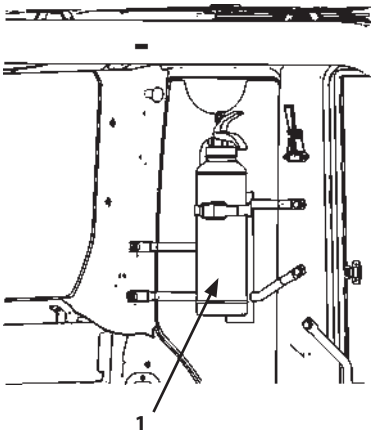

MDAA-01-319-2 ja

Handling the Cab Door and Window

Door Lock Release Lever

CAUTION

- **Open the cab door all the way until it securely locks in the latch on the side of the cab.**
- **Do not unlock the cab door when the machine is parked on a slope or while the wind is strong. The door may close suddenly.**
- **When opening or closing the cab door, take extra care not to catch fingers between the base machine and the cab door. The cab door may close accidentally, possibly resulting in personal injury.**

To release the door, flip up the armrest first and push down the lever (1) from the inside of handrail.

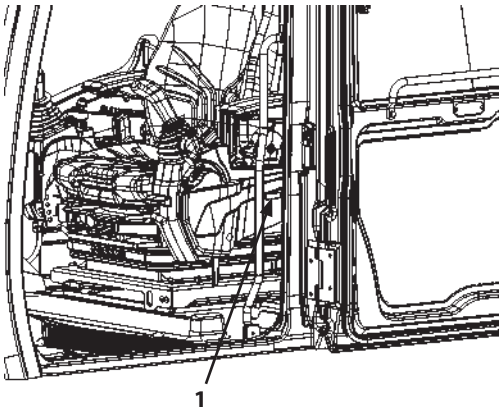

MDFY-01-029-1 ja

Opening/Closing and Removing Cab Inside Window

WARNING

- **Before opening, closing or removing the upper front cab window, overhead window, cab door window or lower front window, be sure to lower the front attachment to the ground and put pilot shut-off lever (1) in the LOCK position. Failure to do so may allow the machine to move unexpectedly if a control lever or pedal is mistakenly touched with a part of the body, possibly resulting in personal injury or death.**
- **Park the machine on a level surface and stop the engine before opening and closing the upper front window.**

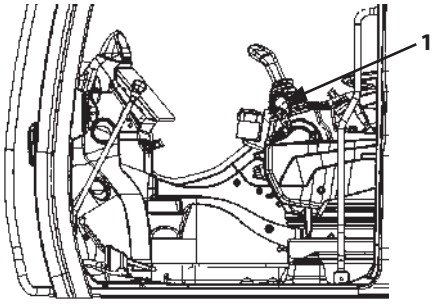

MDFY-01-022-1 ja

- **When opening the upper front window, hold the window with your hands and hold it until the upper front window is locked.**
- **When closing the upper front window, it may accidentally fall under its own weight. Hold the upper front window with both hands until it is completely closed. The window stops once before closing completely. Do not operate the machine when the window is in this position. The upper front window is not locked in this position, so there is a possibility that the window may drop suddenly.**

Opening and Closing Upper Front Window

CAUTION

- **Close the upper front window slowly so you do not catch your fingers.**
- **Always secure lock pin (2) in the lock position after the upper front window is opened.**

1. Press lock release lever (1) at the upper center to release the upper front window lock.
2. As shown in the illustration on the right, hold lock release lever (1) and lower handle (4) on the upper front window, and pull the upper front window up and back until auto locks (3) at both sides of the upper front window securely engage with the strikers on the ceiling.
3. After confirming that the window has engaged securely with auto locks (3), slide lock pin (2) into the left bracket boss hole to lock the window in position.

   NOTE

   When the upper front window is opened, the wiper and washer are inoperable.

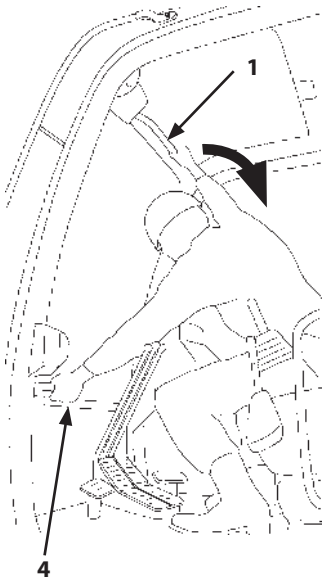

MDAA-01-358-2 ja

4. To close the upper front window, as shown in the illustration on the right, hold upper lock release lever (1) and lower handle (4) of the upper front window in same way as for opening. Then perform steps 1, 2 and 3 of the procedure in reverse order. The window stops before it completely closes, so close the front window by pushing lock release lever (1) upward.
   Push lock release lever (1) downward to release auto lock (3).

   NOTE

   The wiper and washer will not operate unless the upper front window is securely closed.

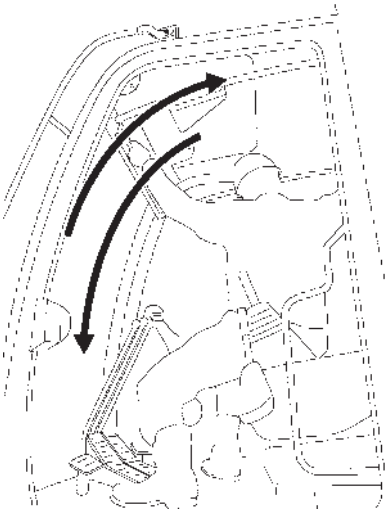

MDAA-01-359-1 ja

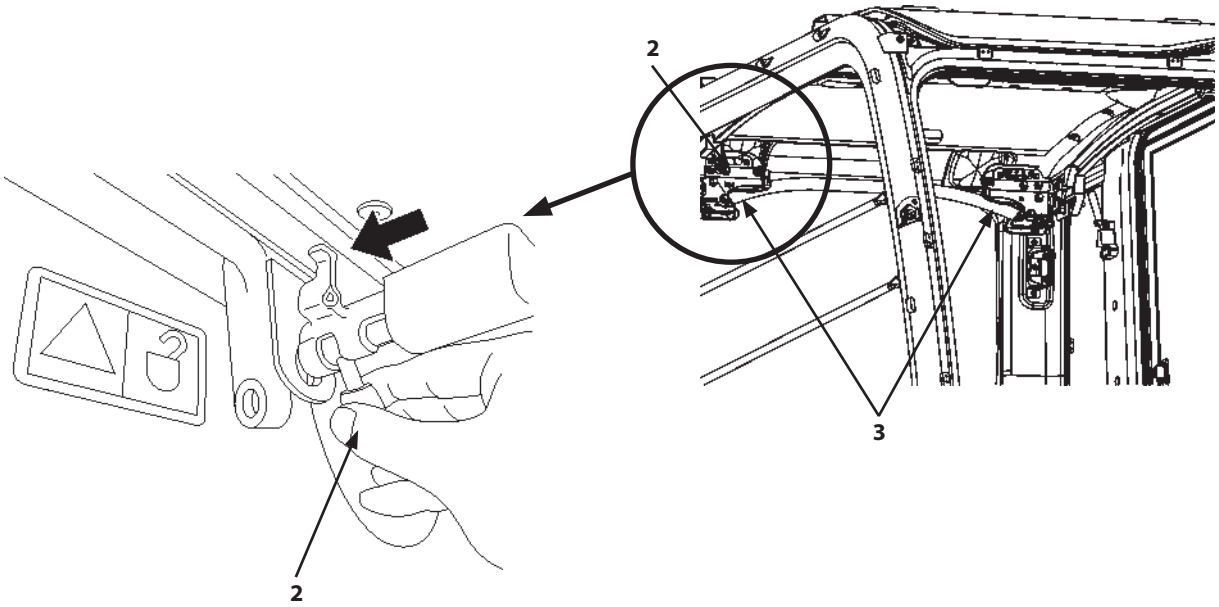

MDAA-01-306-1 ja

Removing and Storing Lower Front Window

CAUTION

Take care not to get yours fingers caught when handling the lower front window.

1. Open the upper front window beforehand when removing the lower front window.
2. Lift up the lower front window to remove it.
3. Store the removed windowpane in the storage location to the rear. After inserting the windowpane into rubber clips (2 and 3), slide it sideways securely into rubber clip (4). Push fastener (1) to lock.

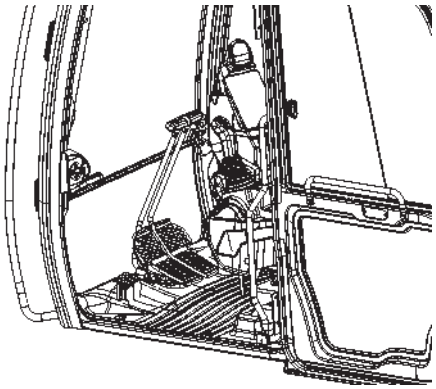

MDFY-01-030 ja

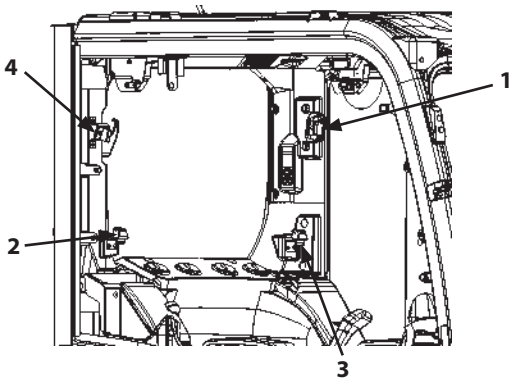

MDFY-01-031-1 ja

Opening Side Window

Hold handle (1) and slide windowpane to open the side window.

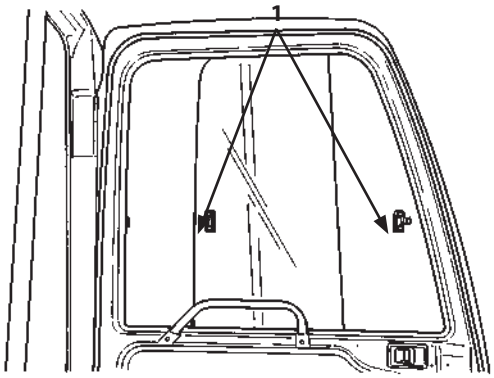

Side Window

MDC1-01-547-1 ja

Opening and Closing the Roll Screen (for Front and Right Windows) (Optional)

To provide shade and ensure good visibility for the operator, roll screens are fitted.
Roll screens are a fitted to the front window and window on the right side to provide shade.

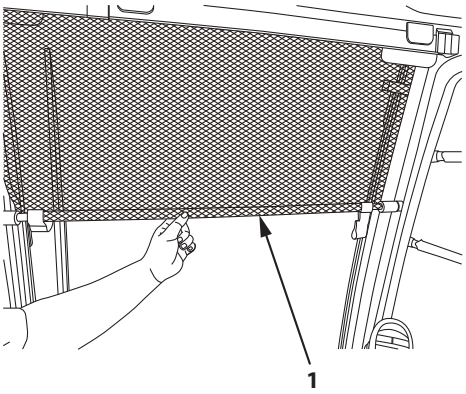

MDFY-01-074-1 ja

WARNING

- **Ensure the pilot shut-off lever is in the LOCK position when operating the roll screen. The machine may unexpectedly move if the work lever or pedal are mistakenly touched.**
- **Set the bottom of the roll screen bar (1) to an appropriate position that does not impede vision.**

WARNING

Do not hold onto the roll screen for support when getting onto/off of the cab or standing up from the seat. Doing so may damage the screen and/or result in injury.

IMPORTANT

- **Hold the center of bar (1) when using the screen. If the center is not held, the screen may snag on surrounding parts or belongings and cause injury.**
- **Do not pull strongly on the screen as this may damage or break it.**
- **When opening or closing the front window, store the roll screen on the right window side.**

How to Use on the Front Window

1. When the roll screen is secure on the right window side, use the procedure below to move it over the front window.
   Secure by sliding lock pin (2) to the left to remove it from receiving part (3), rotating it to the front window side and inserting lock pin (2) into receiving part (4).
   Ensure lock pin (2) is securely inserted into receiving part (4).

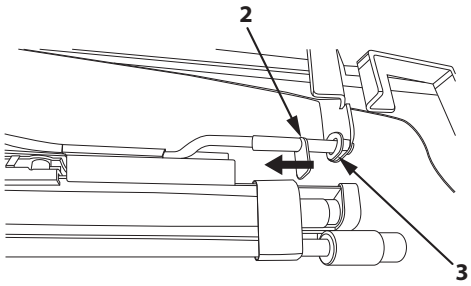

MDFY-01-072-2 ja

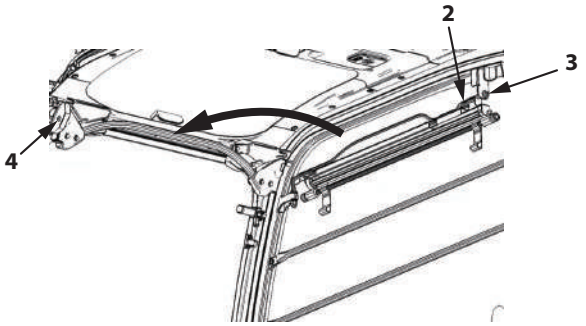

MDFY-01-066-1 ja

2. Pull the screen down, tilt bar (1) and fit the end into rail (5).
3. While holding the center of bar (1), press switch (6) and wind up the screen to adjust screen pull-out. The left-right position of the screen can be adjusted by sliding case (7) until it hits stopper (8).

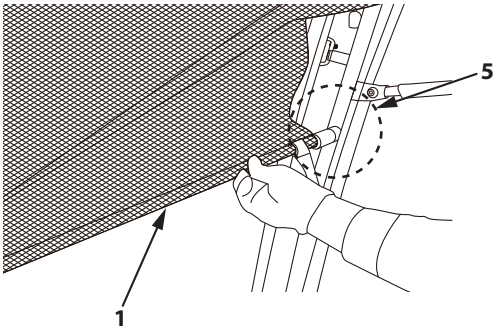

MDFY-01-067-1 ja

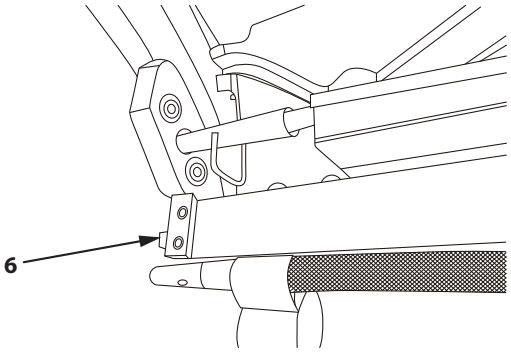

MDFY-01-068-1 ja

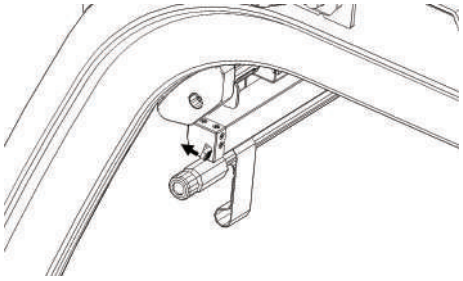

Direction of operation for switch (6)

MDFY-01-120 ja

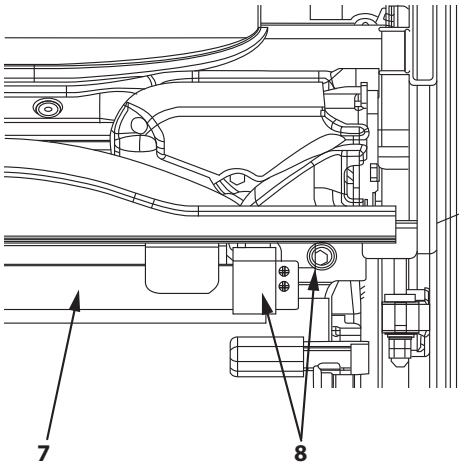

MDFY-01-069-1 ja

How to Store on Right Window Side

When opening or closing the front window, store on the right window side.

1. Perform the reverse of the procedure described in "How to Use on the Front Window" and move to the right side.
2. While holding the center of bar (1), press switch (6) and fully wind up the screen.

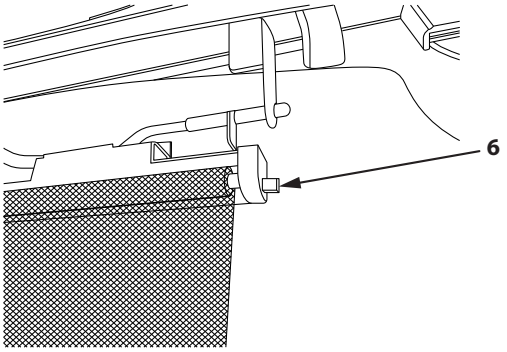

MDFY-01-070-1 ja

3. Attach screen fasteners (9) to secure bar (1) to case (7).

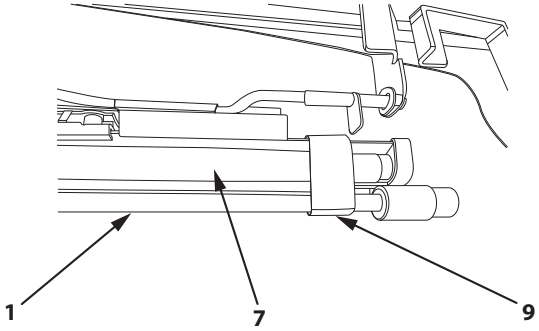

MDFY-01-072-1 ja

How to Use on Right Window Side

The screen can be installed on the right window side as protection from the sun.
However, if other items are fitted to pipe (10), use on the right side may not be possible.

1. Secure bar (1) by pulling the screen down and attaching screen fastener (9) to pipe (10).
   If screen fastener (9) is worn, it may not be able to secure the screen. Screen fastener (9) can be easily replaced, and should be replaced if it wears out.

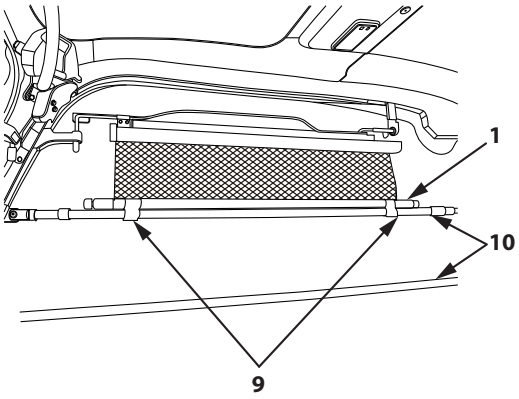

MDFY-01-073-1 ja

How to clean the screen

When cleaning the screen, do not use detergents or other cleaning fluids. Use a towel that has been moistened with water and gently wrung and wipe the dirt off gently while supporting the screen with a hand.

NOTE

If detergent is used or water is applied directly, it may cause the screen condition to deteriorate or wrinkle.

Opening and Closing the Roll Screen (for Rear Window) (Option)

The machine can be equipped with a roll screen to provide shade, ensuring good visibility for the operator.

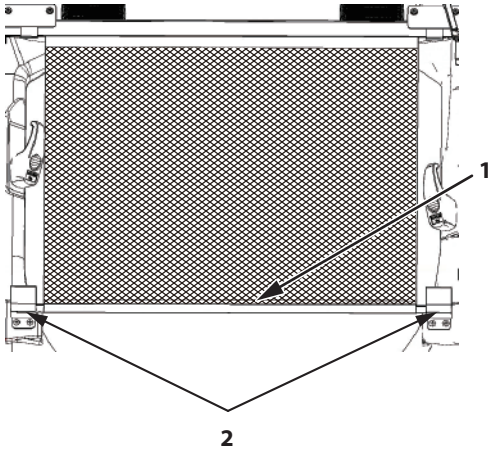

MDFY-01-041-1 ja

WARNING

- **Ensure the pilot shut-off lever is in the LOCK position when operating the roll screen. The machine may unexpectedly move if the work lever or pedal are mistakenly touched.**
- **Set the bottom of the roll screen bar(1) to an appropriate position that does not impede vision.**

IMPORTANT

- **Since the screen is normally rolled up, it will automatically roll up bar (1) is released from the hand. Hold the center of the bar (1) when using the screen. If the center is not held, the screen may snag on surrounding parts or belongings and cause injury.**
- **Do not pull strongly on the screen as this may damage or break it.**

The screen can be installed on the back window as protection from the sun, by pulling out the screen and hooking it on the lower side of receiving part (2).
If not properly hooked in place, it may come off. To avoid this, ensure it is secure.

How to clean the screen

When cleaning the screen, do not use detergents or other cleaning fluids. Use a towel that has been moistened with water and gently wrung and wipe the dirt off gently while supporting the screen with a hand.

NOTE

If detergent is used or water is applied directly, it may cause the screen condition to deteriorate or wrinkle.

Open and Closing the Ceiling Sunshade

The ceiling sunshade is opened and closed by gripping handle (1) and sliding the sunshade.

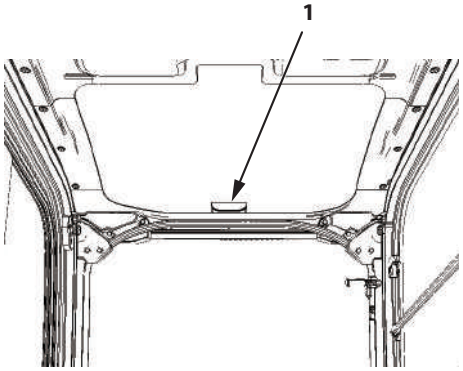

MDFY-01-042-1 ja

Opening and Closing the Overhead Window (Clear Hatch)

Move locks (1) toward center of the window. Hold handle (2) and lift the window until it rises upright. With the window positioned upright, it will be secured in position by dampers (3).

To close, hold handle (2) and pull the window down until a "click" sound is heard from left and right locks (1).

Note that the overhead window can be used as an emergency exit.

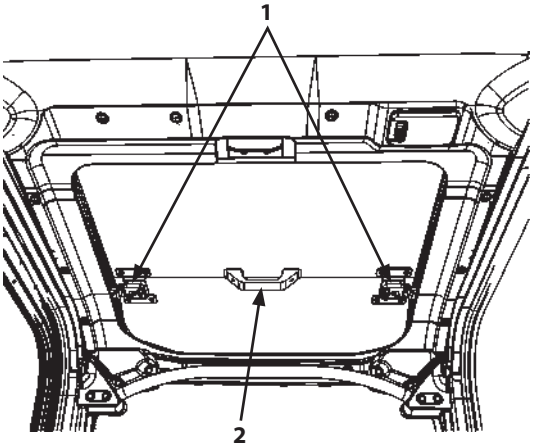

MDAA-01-302-1 ja

IMPORTANT

- **Replace the clear hatch with a new one every 5 years even if undamaged. Replace in less than 5 years if there is any visible damage or it receives a major impact.**
- **When cleaning the clear hatch, use a neutral detergent.**
  If an acidic or alkaline detergent is used, the clear hatch may become discolored or crack.
- **Keep organic solvent away from the clear hatch. Failure to do so may cause the clear hatch to become discolored or crack.**

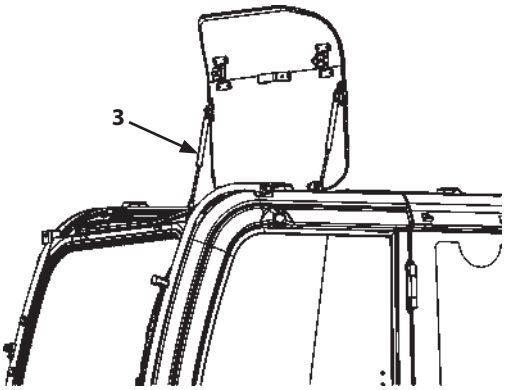

MDAA-01-303-1 ja

Opening and Closing the OPG Front Guard (Optional)

WARNING

- **Do not release lever (1) when the machine is on a slope. The guard may suddenly open.**
- **To open and close the OPG front guard, hold (A). If holding other parts, there is a risk of your hand becoming caught.**
- **When opening or closing the front guard, use a stepladder etc. and make sure footing is secure.**

IMPORTANT

Do not operate the front attachment while the OPG front guard is open.
The front attachment may interfere with the OPG front guard, possibly resulting in damage.

When releasing the lock, pull lever (1) down.
When the OPG front guard is slightly open, lock lever (3) securely on the cab side.
When the OPG is fully open, lock lever (4) securely on the guard side.
When closing the OPG front guard, hold (A) and close the front guard until the locking mechanism is properly engaged with catch (2).

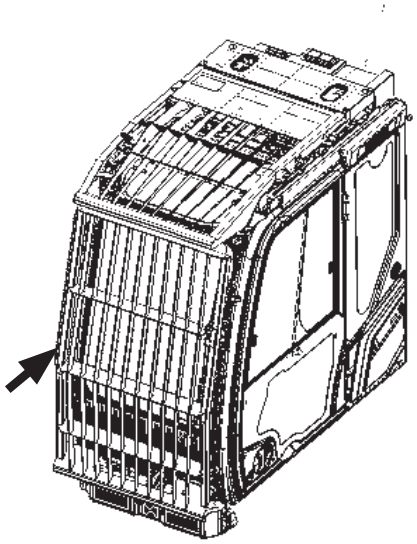

MDFY-01-043-1 ja

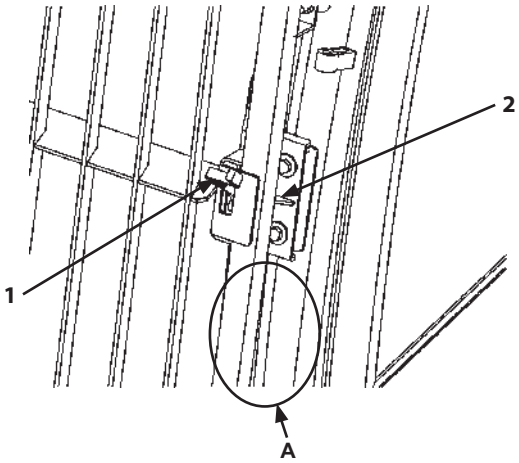

MDC1-07-089-2 ja

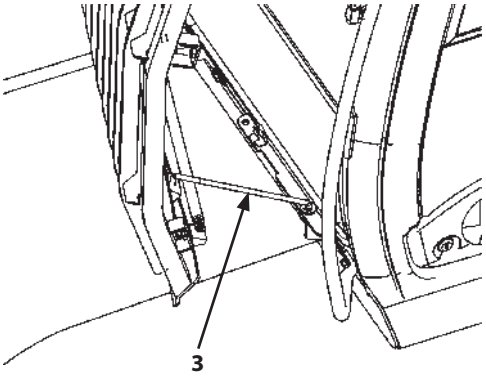

MDC1-07-090-1 ja

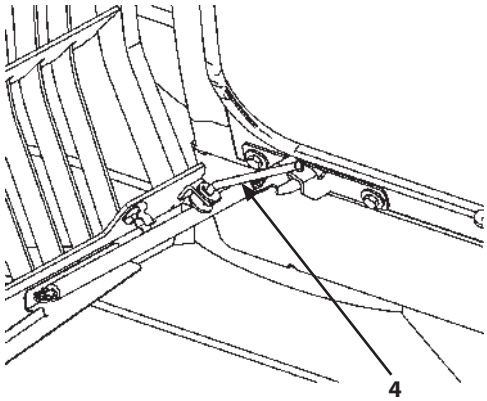

MDC1-07-091-1 ja

Opening and Closing the OPG Head Guard (Optional)

WARNING

- **Do not release lever (1) or (2) when the machine is on a slope. The guard may suddenly open.**
- **To open and close the OPG front guard, hold (A). If holding other parts, there is a risk of your hand becoming caught.**
- **When opening or closing the head guard, use a stepladder etc. and make sure footing is secure.**
- **When levers (1) and (2) are raised, the locking mechanism is not engaged with catches (4) and (5), and so the guard must be closed again.**

To release the lock, push lever (1) and (2) upwards.
When the OPG front guard is open, ensure lever (3) is locked securely on the cab side.
When closing the OPG front guard, hold (A) and close the front guard until the locking mechanism is properly engaged with catches (4) and (5).

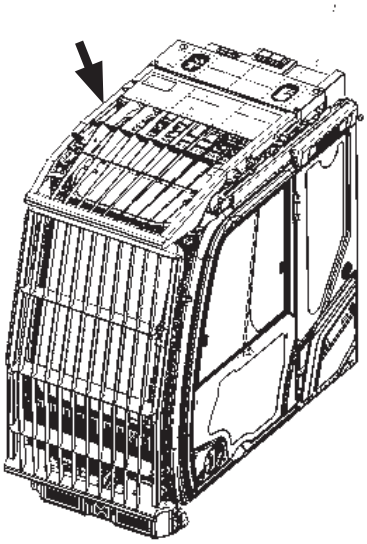

MDFY-01-043-2 ja

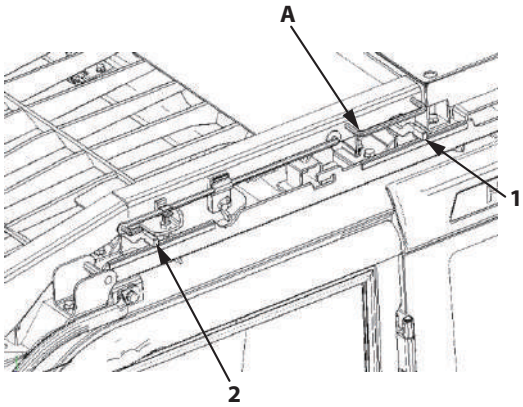

MDFY-01-044-2 ja

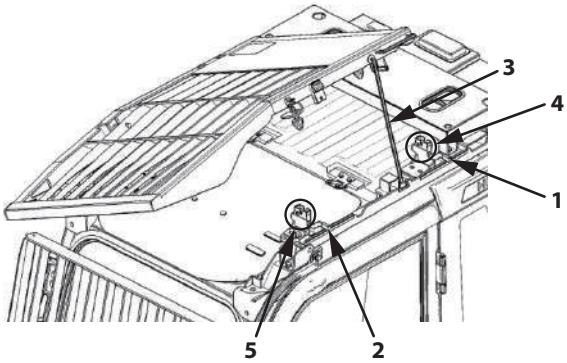

MDFY-01-045-2 ja

Adjusting Operator's Seat and Console

Adjusting Console Height

The console height should be correctly adjusted to suit the body shape of the operator and the content of the work. The console and control levers can be adjusted to 3 different heights.

Height Adjustment Procedure

1. Lower the bucket to the ground. Stop the engine.
2. Set the pilot shut-off lever to the LOCK position.
3. Move levers (1) on the left and right of the console upwards, remove lock pins (2) from lock bracket (3) and adjust the position of the console.
4. After adjusting the console, make sure lock pins are in lock brackets (3).

IMPORTANT

If lever (1) becomes more difficult to move, apply grease to lock pin (2). If no improvement is achieved, consult your authorized dealer.

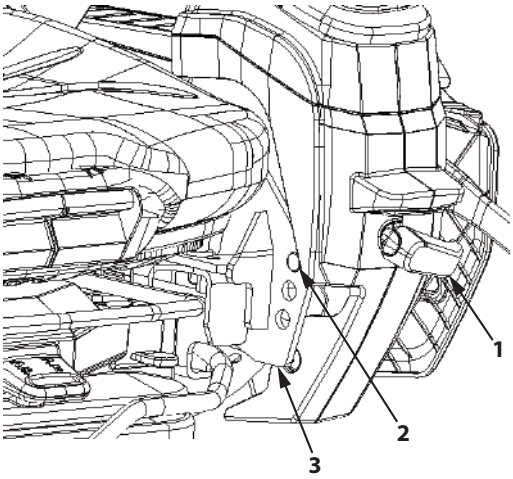

MDFY-01-033-1 ja

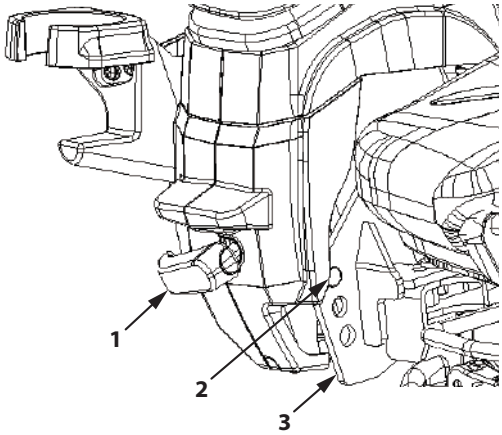

MDFY-01-034-1 ja

Adjusting the Operator's Seat (Air Suspension Type)

WARNING

Before adjusting the seat, be sure to lower the front attachment to the ground and put the pilot shut-off lever in the LOCK position. Failure to do so may allow the machine to move unexpectedly if a control lever or pedal is mistakenly touched with a part of the body, possibly resulting in personal injury or death.

Seat Height and Angle Adjustment

IMPORTANT

The seat is an air suspension type of seat. Air pressure is supplied by the compressor, so start the engine.

Pull lever (1) to introduce air and raise the seat. Press it down to release air and lower the seat. Indicator (2) is remains green for the range suited to the operator's weight.

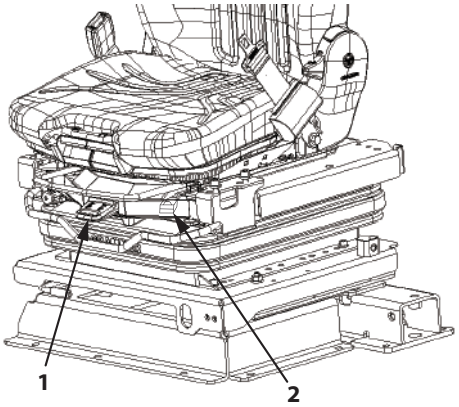

MDFY-01-089-1 ja

Console and Seat Fore-aft Adjustment

Operate console and seat slide lever (3) to adjust the seat and both right and left consoles to the desired distance from the travel pedals and levers. For fore-aft adjustment, there are 8 increments with an interval of 20 mm, giving a total adjustment range of 140 mm.

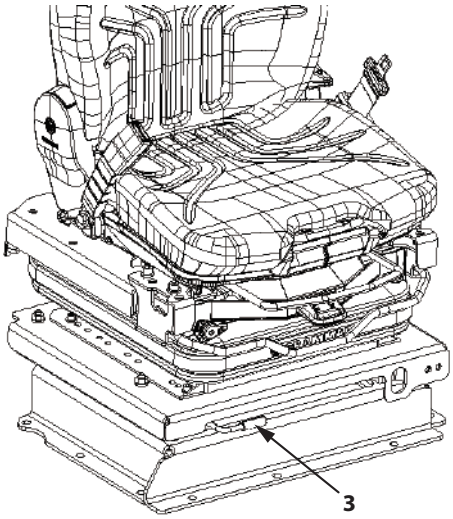

MDFY-01-090-1 ja

Seat Only Fore-Aft Adjustment

Operate seat slide lever (4) to adjust the seat to the desired distance from the travel pedals and levers. For fore-aft adjustment, there are 20 increments with an interval of 10 mm, giving a total adjustment range of 190 mm.

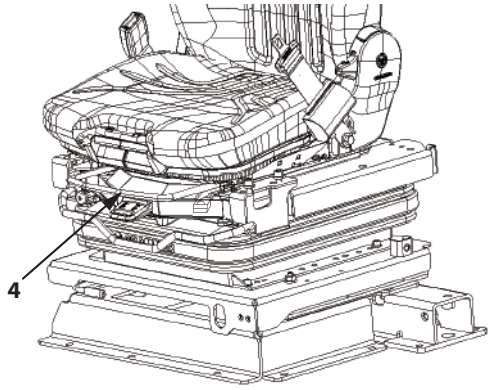

MDFY-01-089-2 ja

Suspension Adjustment

Turn knob (5) to adjust the suspension.

Turn in direction A	:	gets softer
Turn in direction B	:	gets stiffer

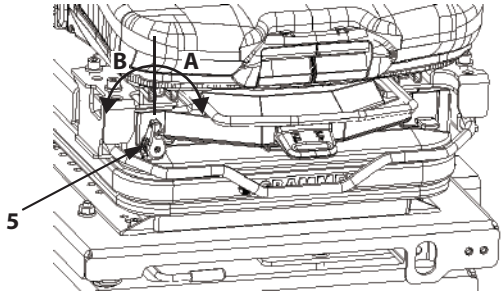

MDFY-01-091-1 ja

Fore-Aft Adjustment of Seat Surface

Lift lever (6) to operate. For fore-aft adjustment, there are 3 increments with an interval of 30 mm, giving a total adjustment range of 60 mm.

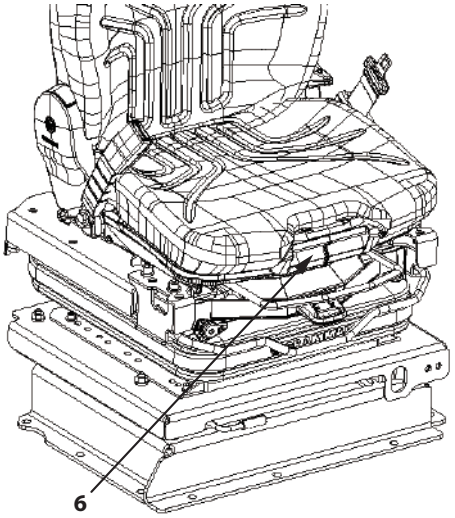

MDFY-01-090-2 ja

Angle Adjustment of Seat Surface

Lift lever (7) to operate. The height of the seat edge can be set to one of 4 levels.

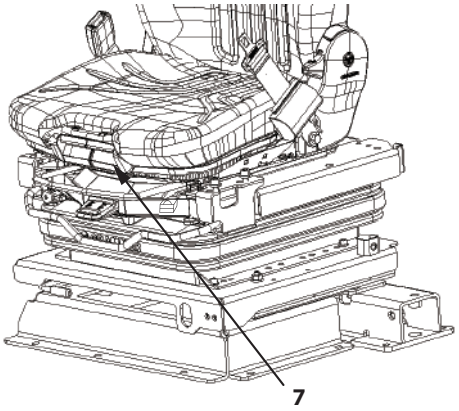

MDFY-01-089-3 ja

Backrest Adjustment

Pull backrest lever (8) and adjust the fore/aft tilt of the backrest. With the backrest in the desired position, release lever (8).

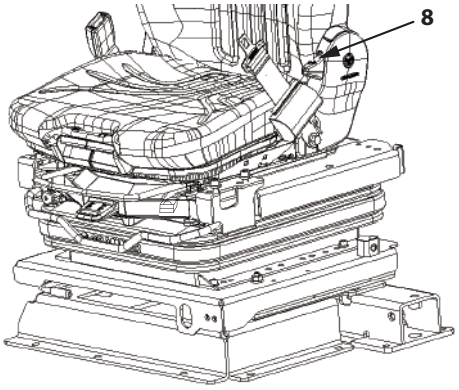

MDFY-01-089-4 ja

Armrest Adjustment

Armrest (9) can be lifted so it pivots upright to 90 °. Pull armrest upright to facilitate getting on and off the machine. The angle of armrest (9) can be adjusted to the desired position by turning adjusting dial (10) on the bottom of armrest (9).

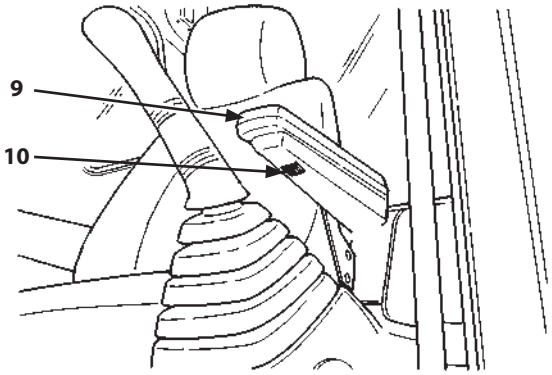

M1G6-01-017-3 ja

Seat Belt

WARNING

- **Be sure to use seat belt (1) when operating the machine.**
- **Before operating the machine, always check the condition of seat belt (1) and its mounting hardware. If any damage and/or wear are found, replace the part concerned.**
- **Replace seat belt (1) every 3 years, regardless of appearance.**

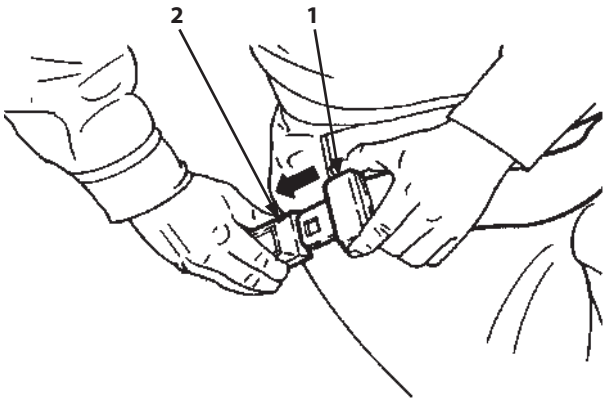

M1U1-01-031-1 ja

Using the Seat Belt

1. Confirm that seat belt (1) is not twisted. Securely insert the end of seat belt into buckle (2). Lightly pull on the belt (1) to confirm that the buckle latches securely.
2. Push button (3) on buckle (2) to unfasten seat belt (1).

Replace seat belt (1) if it is damaged or worn, or if the machine is involved in an accident which puts severe stress on the seatbelt.

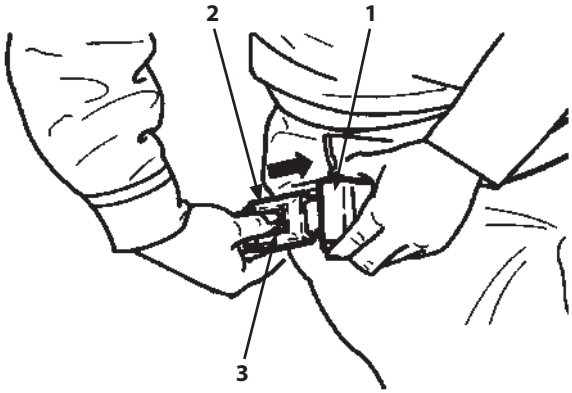

M1U1-01-032-1 ja

Aerial Angle

This is a function for displaying a single image on main monitor (2), showing the area around the machine. It is composed of images from cameras on the left (5), right (4) and rear (6) of the machine. This provides the operator with additional assistance when checking obstacles around the machine.
The unaltered camera images can be displayed by pushing screen selector/set switch (3).

WARNING

- **The images are displayed for the purpose of helping the operator check the area around the machine. People and objects displayed on the monitor may appear differently from their actual positions or distances. Some areas, such as near and under the machine, cannot be depicted by the cameras. Before moving the machine, always check the area around the machine thoroughly.**
- **Check visibility of the monitor image before operating the machine. If the visibility is poor, the field of vision cannot be ensured, which may result in serious personal injury or property damage.**
- **The installation position of cameras is adjusted to produce a good composite image. Do not make any alterations, such as changing the position of cameras on the left (5), right (4) and rear (6) of the machine.**
- **If the image is difficult to see, clean the camera(s) and/or monitor to make the image clearer. Always ensure good footing when cleaning the cameras.**

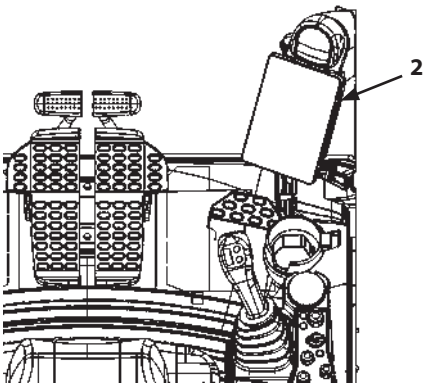

MDFY-01-028-2 ja

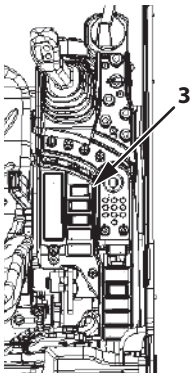

MDFY-01-117-1 ja

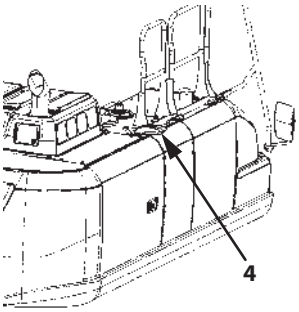

MDFY-01-121-1 ja

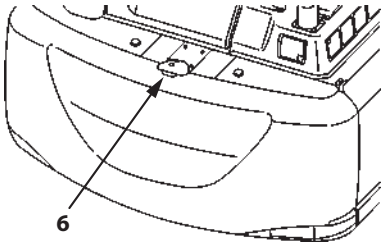

MDFY-01-084-1 ja

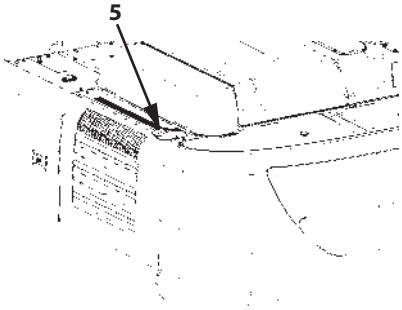

MDFY-01-122-1 ja

NOTE

The surfaces of multi-function monitor (1) and the camera lenses are made of plastic. When cleaning them, use a clean, water-dampened cloth and wipe lightly. Never use an organic solvent.

IMPORTANT

- **If there are any problems with the image on multi-function monitor (1), contact your authorized dealer.**
- **It may be necessary to reconfigure the camera composition if work is done that affects camera installation position (such as removing/installing camera brackets, counterweights or replacing a camera). Make sure camera images are displayed properly by using the inspection methods indicated in "Checking Aerial Angle Camera Images" in Chapter 7, Inspection and Maintenance. If any camera images are not displayed properly, contact your authorized dealer.**

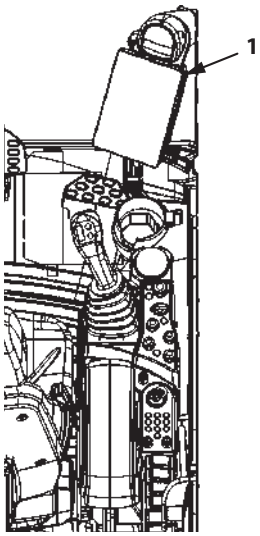

MDFY-01-058-2 ja

Switching the Monitor Display

Push screen selector switch (1) to switch between screens.

- Display Screen
  Pressing the right side of the switch steps through the screens in the following order: 1→2→3→4→5→1.
  Pressing the left side of the switch steps through screens in the following order: 1→5→4→3→2→1.

1- Surrounding Image

2- Surrounding Image + Image to Rear

3- Surrounding Image + Image to Right Side + Image to Rear

4- Image to Left Side + Image to Right Side + Image to Rear

5- Image to Right Side + Image to Rear

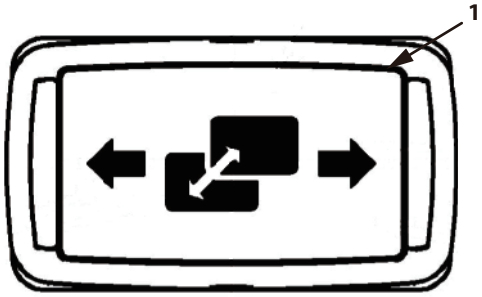

MDFY-01-112-1 ja

Screen Description

Surrounding Image

The surrounding image is displayed full-screen.
This is a composite image made up of images from the cameras on the left, right and rear of the machine.
A compressed view is generated by image processing.
This gives the operator an extensive view of the surroundings of the machine, including areas that would be blind spots with conventional rear view mirrors.

Objects on the right and left sides of the machine are combined from the 2 camera images, which may result in objects overlapping or parts of objects missing.

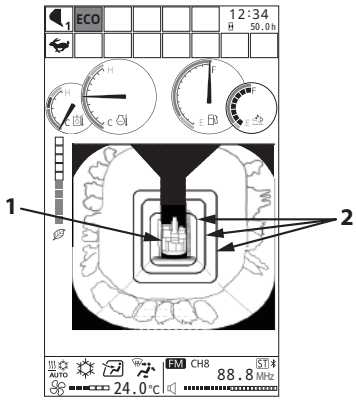

MDFY-MT-139-1 ja

In the figures, the square shape (machine icon (1)) represents the machine.
Guide lines (2) indicate distances from the machine.
The guide lines indicate positions 1, 3 and 5 meters from the machine. Use these as approximate guides to distances to the object.

CAUTION

- **The image around the machine is compressed using image processing to allow a wide view at a glance, but care must be used as the sense of distance and how things appear are different from a normal, uncompressed image.**
- **As the image around the machine is processed and combined from multiple camera images, it may appear different from when looked at with the naked eye and areas may not appear contiguous, objects may appear to be collapsing or not appear in the image at all.**
- **A clear image may not be shown if the area around the machine is too bright or too dark.**
- **Guide lines are based on the ground being flat. The distances of guide lines are not accurate on sloping or rough terrain.**

Machine Icon

The machine icon is a bird's eye view of the machine from directly above it.
The machine icon on the monitor makes it possible to imagine the orientation of the machine and the position of the cab.

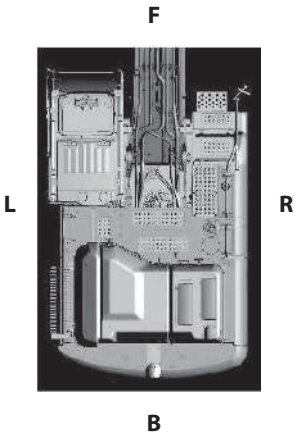

Machine Icon

MDFY-01-061-1 ja

F: Front R: Right side
L: Left side B: Rear

Surrounding Image + Image to Rear

The surrounding image and image from the rear-facing camera are displayed. Camera direction guide icons (1) indicate which camera the displayed image is from.

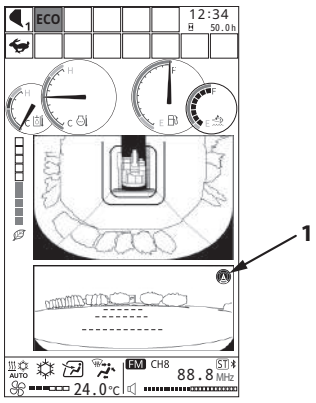

MDFY-MT-145-1 ja

Surrounding Image + Image to Right Side + Image to Rear

The surrounding image, and images from the right side and rear cameras are displayed. Camera direction guide icons (1) indicate which camera the displayed image is from.

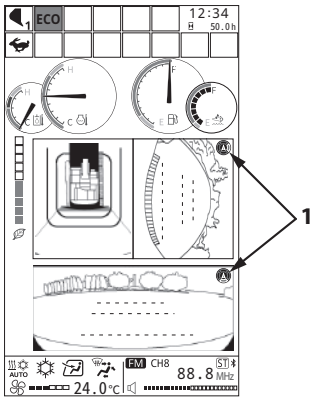

MDFY-MT-140-1 ja

Image to Left Side + Image to Right Side + Image to Rear

Images from the left side, right side and rear cameras are displayed. Camera direction guide icons (1) indicate which camera the displayed image is from.

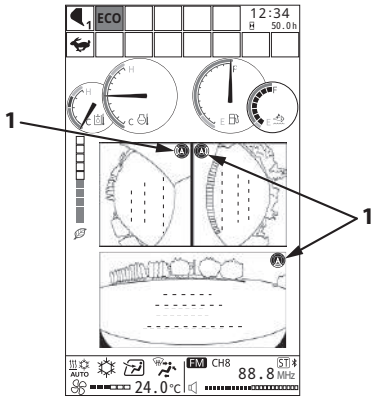

MDFY-MT-138-1 ja

Image to Right Side + Image to Rear

The images from the right side and rear cameras are displayed. Camera direction guide icons (1) indicate which camera the displayed image is from.

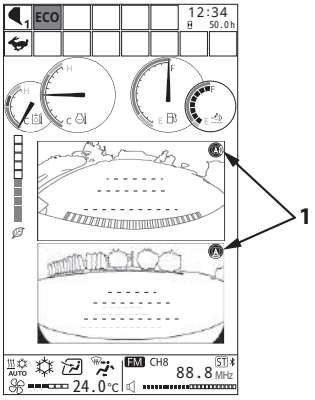

MDFY-MT-137-1 ja

Camera Direction Guide Icons

Camera direction guide icons indicate which camera the displayed image is from.
The arrow in the center of the icon indicates the front of the machine and which image(s) are displayed around the icon indicate which camera the image is from. As illustrated at right, the image from the rear-view camera is displayed on the monitor.

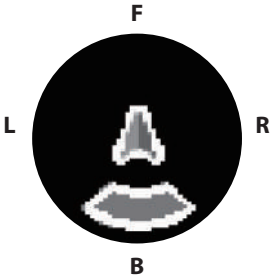

MDFY-01-063-1 ja

F: Front B: Rear
L: Left R: Right

Discrepancies between Image and Actual Road Surface

1. **Image of upslope or working face**
   This indicates how the camera looks when shooting uphill. Because point (a) on the upslope is stretched on the monitor screen on an extended line of the plane, the distance from the machine icon is depicted as further than it actually is.

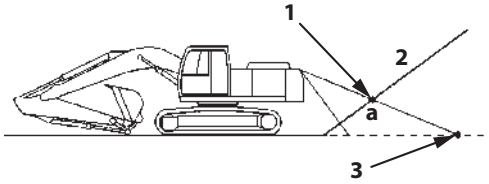

MDFY-01-064-1 ja

1: Position of actual point a 2: Slope
3: Position of a point a on screen

2. **Image of downslope or drop**
   This indicates how the camera looks when shooting downhill. Because point (b) on the downslope is shortened on the monitor screen on an extended line of the plane, the distance from the machine icon is depicted as closer than it actually is.

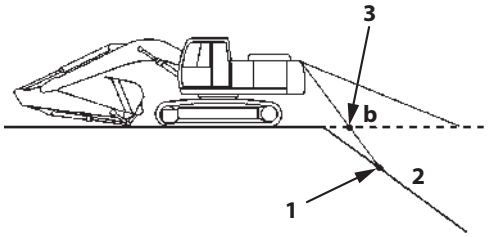

MDFY-01-065-1 ja

1: Position of actual point b 2: Slope
3: Position of point b on screen

Installation and Adjustment of Mirrors

WARNING

- **Check the field of vision in the mirrors using the visibility map, and adjust the mirrors accordingly. Adjust the mirrors with the machine positioned as shown.**
- **Improper adjustment of the mirrors results in poor visibility, which may cause a serious injury or death.**
- **Check the field of vision in the mirrors every day before work.**
- **If a mirror is dirty, clean it.**
- **Ensure appropriate footing when adjusting or cleaning mirrors.**

IMPORTANT

- **The image displayed on the rear view camera monitor is meant only as an aid. When operating the machine, pay thorough attention to the surrounding situation.**
- **If a modification is made that may restrict the operator's visibility, recheck the operator's visual field.**

Illustration of machine
(mono block boom)

MDC1-VM-001 ja

Illustration of machine
(2-piece boom)

MDC1-VM-003 ja

Mirror Installation Locations

The installation locations of mirrors (1) and (2) on the machine are shown in the illustration on the right.
To adjust the installation locations of the mirrors, follow the instructions below to ensure safety.

1 - Operator seat mirror

2 - Mirror on handrail for getting on and off the machine

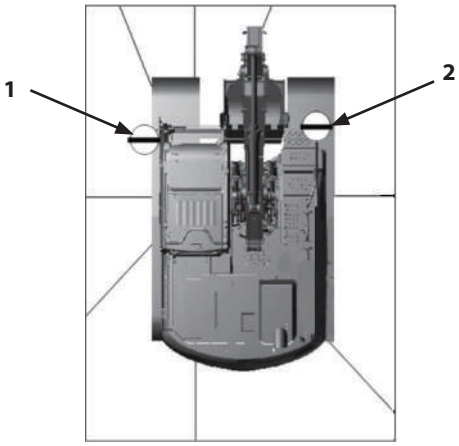

MDFY-01-081-1 ja

- Operator seat mirror (1)

Adjust the mirror so it is in the specified position.

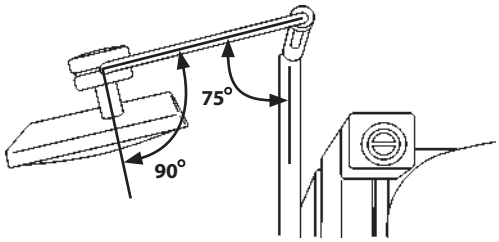

MDFY-01-082-1 ja

- Mirror on handrail for mounting machine (2)

Adjust the mirror so it shows the side of the machine as shown in the diagram. Adjust so that an area at least 1 meter wide running along the right side of machine can be seen from the operator's seat.

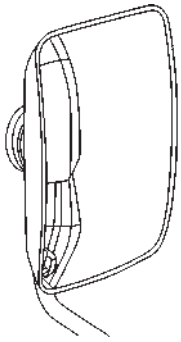

MDFY-01-083 ja

Emergency Exit

Escape from the cab in an emergency as follows:

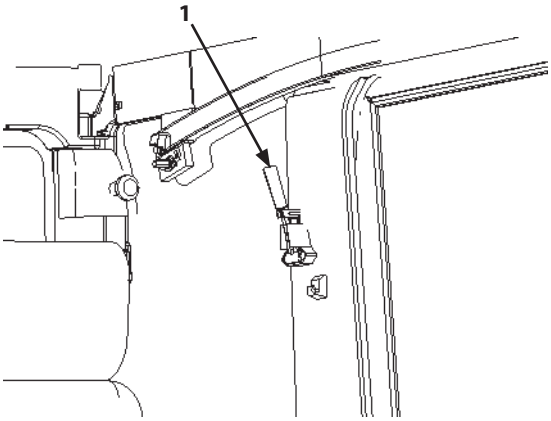

MDAA-01-321-1 ja

CAUTION

The danger of falling is always present when escaping from the cab in an emergency, and may result in serious personal injury. Escape from the cab as safely as possible, depending on the position of the machine and the situation outside.

1. Open the cab door. Escape through the door.
2. If the cab door is difficult to open or use, open the upper front window. Escape through the window.

NOTE

Emergency exit decals (2) are affixed to the front and rear windows. See Opening/Closing and Removing Cab Inside Window for how to open the upper front window.

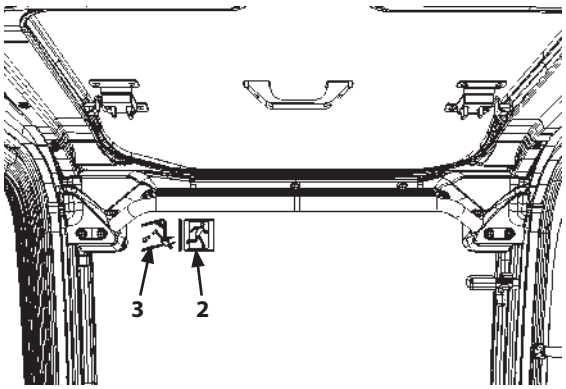

M1U4-01-012-1 ja

CAUTION

If decal (3) is affixed to the front windowpane, it can be broken. However if decal (3) is not affixed to the front windowpane, the glass cannot be broken with emergency evacuation hammer (1). Take care not to be injured by pieces of broken glass.

3. If the upper front window is difficult to open, check if decal (3) is affixed to the windowpane.
   If decal (3) is affixed to the front windowpane, break the front windowpane using emergency evacuation hammer (1) mounted on the left side of the cab. Escape through the broken windowpane.
4. If decal (3) is not affixed to the front windowpane, or if it is not possible to escape through the front window, break the rear windowpane using emergency evacuation hammer (1). Escape through the broken windowpane.
5. If neither front nor rear windows are available for emergency exit, open the overhead window to escape from the cab.

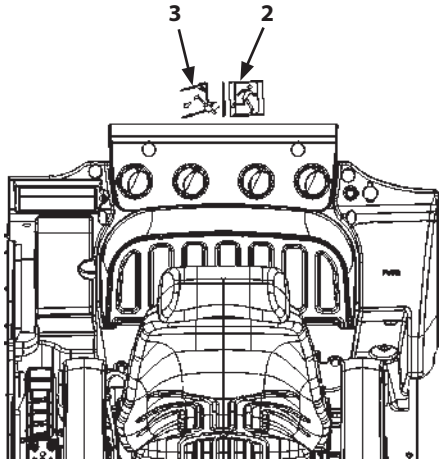

MDFY-01-032-1 ja

Battery Disconnect Switch

IMPORTANT

- **Do not turn battery disconnect switch (1) OFF while the engine is running or the key switch is in any position other than OFF. Damage to the electrical system may result.**
- **Do not turn battery disconnect switch (1) OFF after stopping the engine until lamp (3) goes off. Doing so may damage the electrical system.**

The battery disconnect switch (1) differs from the engine start key switch. When battery disconnect switch (1) is turned OFF, the electrical system is cut off, so no electric current flows in the entire circuit.

Before turning the battery disconnect switch OFF, be sure to turn the key switch OFF, let the engine stop and lamp (3) go out.
Approximate Times for Lamp to Go Out
ZX120-7, 200-7, 240-7, 300-7, 330-7 class: about 5 minutes
ZX160-7, 180-7 class: about 7 minutes

Battery disconnect switch (1) toggles the connection between the battery and electrical system as follows, based on the position of the lever.

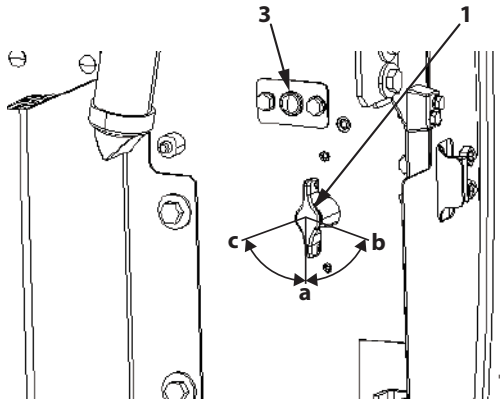

MDFY-07-097-4 ja

a: ON position
b: OFF position (with communication terminal power supply ON)
c: OFF position

Battery disconnect switch (1) should only be used for the following purposes. It is switched by its lever position.

c: OFF position

- Before maintaining or servicing the electrical system
- Before replacing battery
- Before storing the machine for a long time, to prevent battery discharge

b: OFF position (with communication terminal power supply ON)

- When cutting off the battery power supply for reasons other than those described under “c: OFF position”

NOTE

When battery disconnect switch (1) is set to c: OFF position, the battery and electrical system of the machine are completely disconnected.
As a result, it is not possible to acquire operating data from the machine.

If the disconnect switch is set to“b OFF position (with communication terminal power ON), power for the machine controller is secured from the battery for up to 72 hours after the disconnection of the battery power supply.
As a result, it remains possible to acquire operating data from the machine up to 72 hours after the disconnection of the battery power supply.
Note also that in the case of “b: OFF position (with communication terminal power supply ON), power from the battery is still being consumed. Thus, if the machine is to be left unused for an extended period, the “c: OFF position“ setting is recommended.

Switch Operation

1. Open cover (2).
   When lever (1) is in the vertical position (a), the battery disconnect switch is ON. When lever (1) is vertical (a), it cannot be removed.
2. When lever (1) is turned to position (b) or (c), the battery disconnect switch turns OFF. Lever (1) can be removed from the battery disconnect switch when it is in the OFF position.

IMPORTANT

Do not turn the battery disconnect switch OFF when its lamp (3) is lit. Doing so may cause damage to the machine and/or system malfunction.

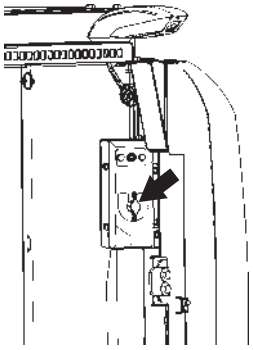

ZX120-7 class

MDFY-01-172-1 ja

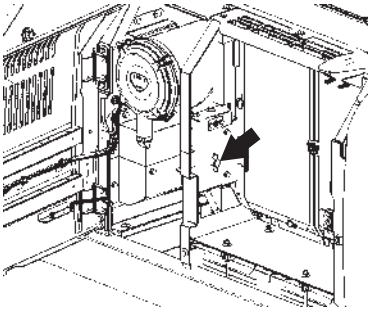

ZX160-7, 180-7 class

MDFY-01-128-1 ja

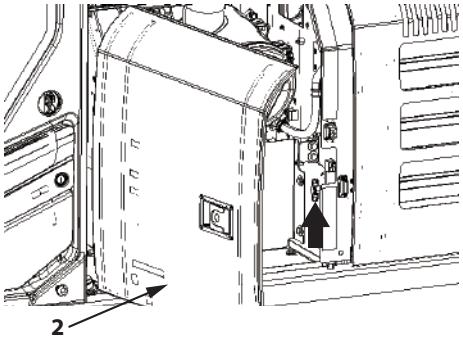

ZX200-7, 240-7 class

MDFY-01-077-1 ja

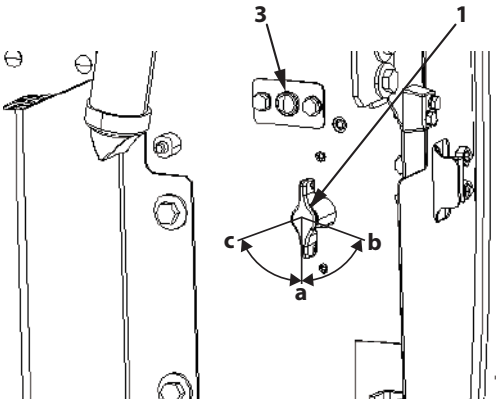

MDFY-07-097-4 ja

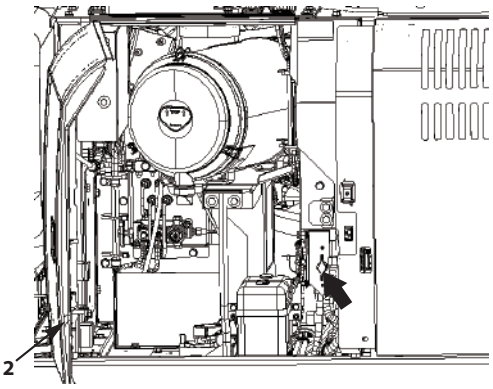

ZX300-7, 330-7 class

MDFY-01-078-1 ja

a: ON position

b: OFF position (with communication terminal power supply ON)

c: OFF position

MEMO

BREAK-IN

Observe Engine Operation Closely

IMPORTANT

Use extra caution during the first 50 hours of operation, until you become thoroughly familiar with the sound and feel of your new machine.

1. Only operate the machine in economy (ECO) mode and limit engine horsepower to around 80 % of its full load.
2. Avoid excess engine idling.
3. Check indicator lights and gauges frequently during operation.

Every 8 Hours or Daily

1. Perform 8-hour or daily service.
2. Watch for fluid leaks.
3. Lubricate working tool pivots every 8 hours for the first 50 hours, and every 8 hours when working in mud and water.

After the First 50 Hours

1. Perform 50-hour service.
2. Check accessible hardware torque. (See Hardware Torque Specifications in Maintenance chapter.)

After the First 100 Hours

Perform 50-hour and 100-hour service.

MEMO

Inspect Machine Daily Before Starting

Before starting the engine, perform Inspect Machine Daily Before Starting.

Engine

- Levels and dirtiness of engine oil and coolant*1
- Ease of starting, exhaust gas color, and noise
- Oil and water leaks, damage to hoses and pipes*1
- Clogging and damage to radiator, oil cooler, intercooler and fuel cooler*1
- Cleaning around the aftertreatment device*1
- Loose and/or missing mounting bolts and nuts*1

Upperstructure

- Level, leaks and contamination of fuel tank*1
- Level, leaks and contamination in DEF tank*1(except ZX120-7 class)
- Hydraulic oil level, contamination of hydraulic oil, leaks from hydraulic oil tank*1
- Movement, play and operating force of all control levers
- Operation of all hydraulic components, oil leaks and damage to pipes and hoses*1
- Deformity, breakage, and abnormal noise at each part
- Loose and/or missing mounting bolts and nuts*1
- Washer fluid*1
- Leaks from DEF hoses (except ZX120-7 class)
- Dirt around the aftertreatment device

Undercarriage

- Sag, wear and damage to crawlers*1
- Oil leaks and wear on upper/lower rollers and front idlers
- Oil leaks from travel devices
- Loose and/or missing mounting bolts and nuts*1

Working Device

- Oil leaks and damage to cylinders, pipe lines and hoses*1
- Wear and damage to the bucket
- Missing, loose and/or worn bucket teeth*1
- Condition of lubrication of working device*1
- Damage to pin anti-extraction pins, stoppers, rings and bolts
- Loose and/or missing mounting bolts and nuts*1

Miscellaneous

- Operating condition of instruments, switches, lights and warning alarm*1
- Function of parking brake
- Deformity and/or damage to the head guard
- Abnormal outside appearance of machine
- Wear and damage of the seat belt*1
- Aerial angle camera images
- Mirror adjustment

*1 Marked items: Refer to “Inspection and Maintenance” for detailed information.

Before Starting the Engine

1. Confirm that the battery disconnect switch is on the ON position.
2. Confirm that pilot shut-off lever (1) is in the LOCK position.
3. Confirm that all control levers are placed in neutral.

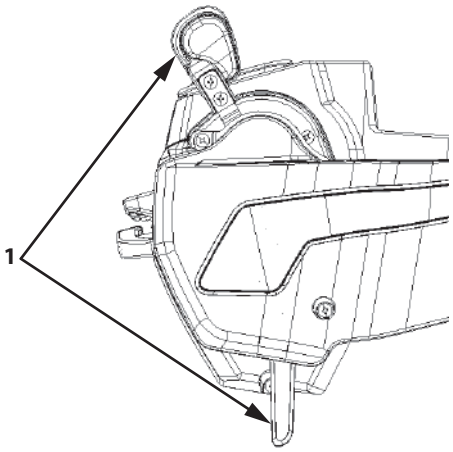

LOCK position

MDFY-01-088-2 ja

4. Insert key (2) into the key switch and turn it to the ON position. Press and hold switch (3) with the engine stopped.
   If engine oil level normal (4) (green) and coolant level normal (5) (green) are displayed, the engine status is normal.

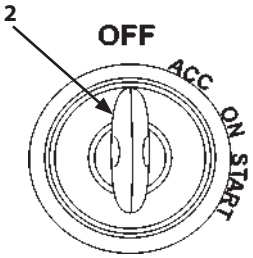

MDCD-01-030-3 ja

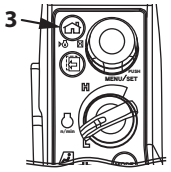

MDFY-01-094-8 ja

IMPORTANT

Visually check them yourself as required. Do not start the engine during the check.

5. Be sure to remain seated with your back against the backrest and adjust the the seat so that all the control pedals and levers can be moved to any position without discomfort. Then put on the seatbelt.

   NOTE

   When the surface of the monitor becomes dusty, lightly wipe the surface with a wet cloth. Never use an organic solvent.

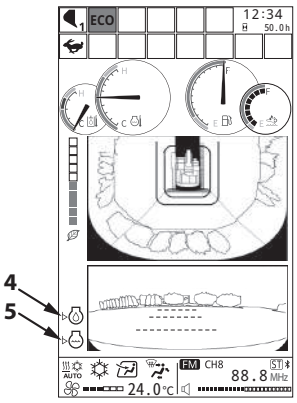

MDFY-MT-130-3 ja

Starting the Engine

Starting the Engine at Normal Temperatures

1. Confirm that pilot shut-off lever (1) is in the LOCK position.
2. Turn engine control dial (3) to the slow idle position.
3. Sound the horn to alert bystanders.

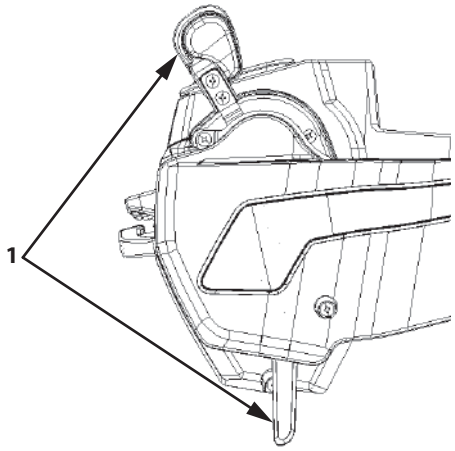

LOCK position

MDFY-01-088-2 ja

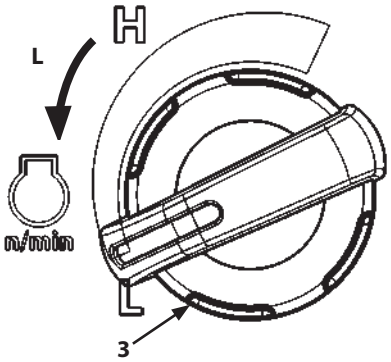

MDFY-01-010-2 ja

4. Insert key (2) into the key switch. Turn it to the ON position.

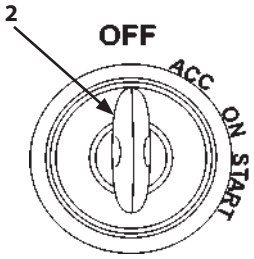

MDCD-01-030-3 ja

5. When the password input screen is displayed on the monitor, enter the password. If the numeric keypad function has not been activated, this screen will not be displayed.

   IMPORTANT

   When required to activate the numeric keypad function, contact your authorized dealer.

NOTE

When the key is turned ON, maintenance notifications (4) for items whose maintenance interval has expired are displayed for 10 seconds.

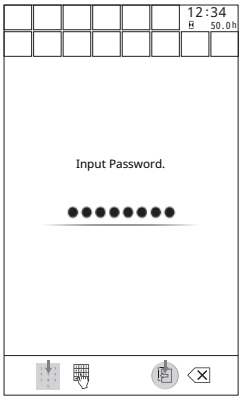

Password Input Screen

MDFY-MT-129 en_GB

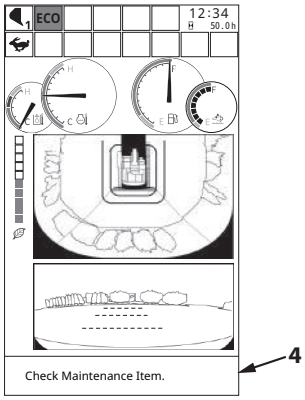

MDFY-MT-123-1 en_GB

6. The basic screen is displayed on the monitor. At this point, check that preheat indicator (5) is OFF and that message (6) is not displayed in the footer.

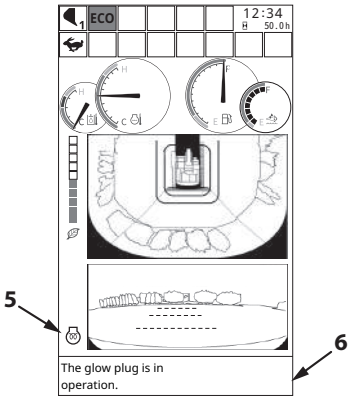

MDFY-MT-132-1 en_GB

7. Turn key (2) to the START position to crank the starter and start the engine.

   IMPORTANT

   Never operate the starter for more than 10 seconds at a time. If the engine fails to start, return the key to the OFF position. Wait for at least 30 seconds, then try again. Failure to do so may damage the starter and/or discharge the batteries.

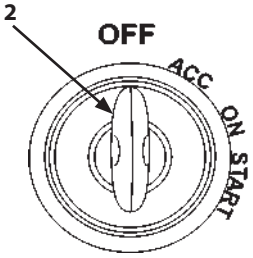

MDCD-01-030-3 ja

8. When the engine starts, immediately take your hand off key (2). Key (2) will automatically return to the ON position.

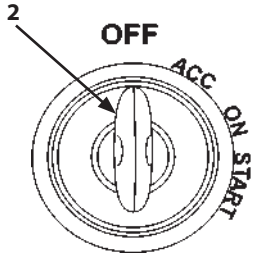

MDCD-01-030-3 ja

NOTE

- *The engine speed will be kept to slow idle speed just after the engine starts. Slow idle speed is maintained while engine speed control indicator (7) is displayed. When the coolant temperature or hydraulic oil temperature is low, this period will be longer. Note also that the engine speed well be kept to slow idle speed even when engine control dial (3) is not set in the slow idle position.*
- *The warm-up system automatically activates after keeping slow idle speed, and the engine speed will temporarily increase even if the engine control dial (3) is set in the slow idle position.*

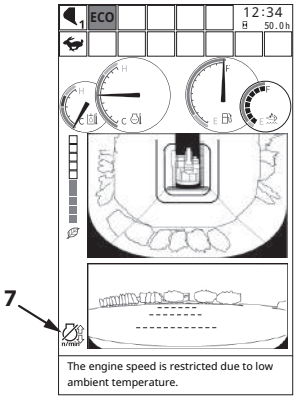

MDFY-MT-131-1 en_GB

CAUTION

Do not attempt to operate the machine while engine speed control indicator (7) is lit. If the machine is operated during this period, the engine speed may change suddenly on completion of the slow idle period. This could cause a sudden increase the speed of operation of the machine and result in a serious accident.

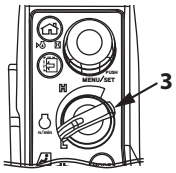

MDFY-01-094-2 ja

NOTE

White smoke may be emitted for several minutes after the engine startss. This is not a malfunction.

Starting in Cold Weather

Preheating

1. Confirm that pilot shut-off lever (1) is in the LOCK position.
2. Turn engine control dial (3) to the slow idle position.
3. Sound the horn to alert bystanders.

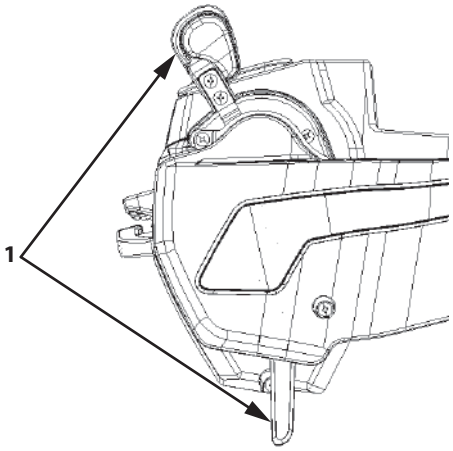

LOCK position

MDFY-01-088-2 ja

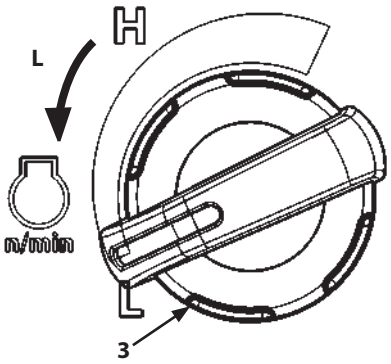

MDFY-01-010-2 ja

4. Insert key (2) into the key switch. Turn it to the ON position.

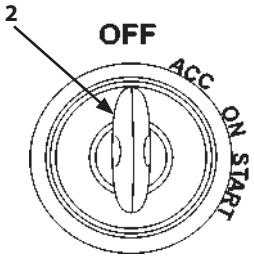

MDCD-01-030-3 ja

5. When the password input screen is displayed on the monitor, enter the password. If the numeric keypad function has not been activated, this screen will not be displayed.

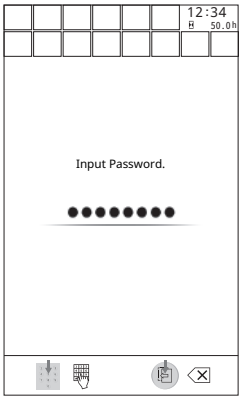

Password Input Screen

MDFY-MT-129 en_GB

NOTE

When the key is turned ON, maintenance notifications (4) for items whose maintenance interval has expired are displayed for 10 seconds.

IMPORTANT

When required to activate the numeric keypad function, contact your authorized dealer.

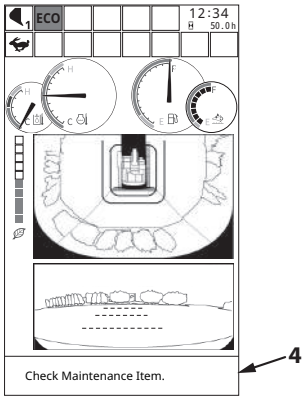

MDFY-MT-123-1 en_GB

6. The basic screen is displayed on the monitor. The machine will automatically check if preheating is required or not. When preheating is required, preheat indicator (5) is lit for automatically and message (6) is displayed at the foot of the screen.

NOTE

If preheat indicator (5) does not come ON, preheating is not required. Follow the instructions in Starting the Engine at Normal Temperatures.

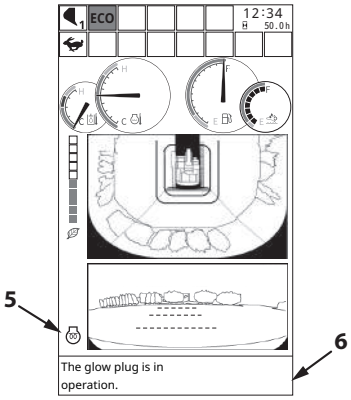

MDFY-MT-132-1 en_GB

7. As soon as preheat indicator (5) goes OFF, turn key switch (2) to the START position to turn the starter.

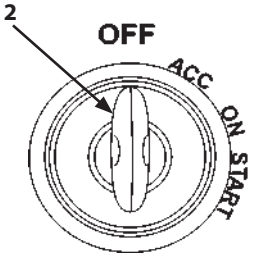

MDCD-01-030-3 ja

IMPORTANT

Never operate the starter for more than 10 seconds at a time. If the engine fails to start, return the key to the OFF position. Wait for at least 30 seconds, then try again. Failure to do so may damage the starter and/or discharge the batteries.

8. When the engine starts, immediately take your hand off key (2). Key (2) will automatically return to the ON position.

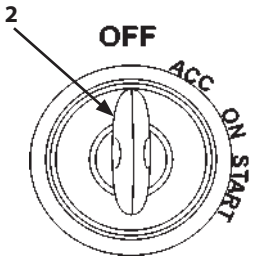

MDCD-01-030-3 ja

NOTE

- *The engine speed will be kept to slow idle speed just after the engine starts. Slow idle speed is maintained while engine speed control indicator (7) is displayed. When the coolant temperature or hydraulic oil temperature (including air intake temperature of ZX160-7 and 180-7 class) is low, this period will be longer. Note also that the engine speed well be kept to slow idle speed even when engine control dial (3) is not set in the slow idle position.*
- *The warm-up system automatically activates after keeping slow idle speed, and the engine speed will temporarily increase even if the engine control dial (3) is set in the slow idle position.*

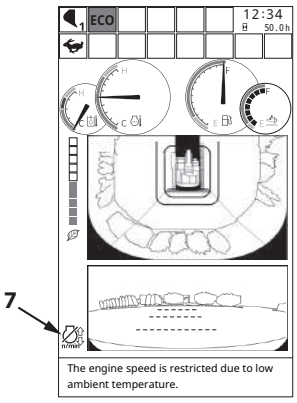

MDFY-MT-131-1 en_GB

CAUTION

Do not attempt to operate the machine while engine speed control indicator (7) is lit. If the engine speed may change suddenly on completion of the slow idle period. This could cause a sudden increase the speed of operation of the machine and result in a serious accident.

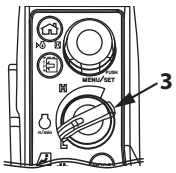

MDFY-01-094-2 ja

NOTE

White smoke may be emitted for several minutes after the engine starts. This is not a malfunction.

Check Instruments After Starting

Checking Instruments Through Monitor Functions

After starting the engine, check the following on the monitor.

Check that engine oil pressure indicator (2) is OFF and the alarm buzzer does not sound.
If engine oil pressure indicator (2) stays ON and the buzzer sounds, immediately stop the engine. Inspect the engine oil pressure system and the oil level.

IMPORTANT

If any abnormality is found on the monitor unit, immediately stop the engine. Inspect the cause of the problem.

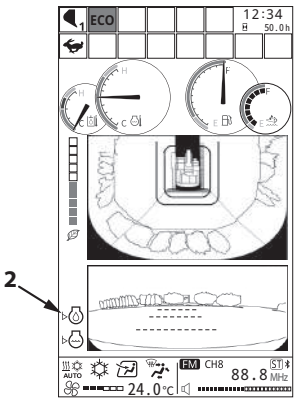

MDFY-MT-130-4 ja

Check Engine Noise and Exhaust Gas Color

Check that the engine noise and exhaust gas color are normal.

NOTE

- *Check the exhaust gas color as follows. (After warm-up operation, run the engine under no load.)*

  Clear : Normal (Perfect combustion)
  Black : Abnormal (Imperfect combustion, abnormal aftertreatment device, abnormal fuel system)
  White : Abnormal (Oil is leaking into the combustion chamber, abnormal aftertreatment device, abnormal fuel system)

- *White smoke may be emitted for several minutes after the engine starts, this is not a malfunction.*

Using the Booster Battery

WARNING

- **An explosive gas is produced while batteries are in use or being charged. Keep open flames and sparks away from the battery area. Do not continue to use or charge the battery when electrolyte level is lower than specified. Explosion of the battery may result.**
- **Park the machine and the machine providing the jump on a dry or concrete surface, not on steel plates. If machines are parked on steel plates, it may cause sparking unexpectedly.**
- **Never connect a positive terminal to a negative terminal. Doing so may cause a short.**

SA-032 ja

IMPORTANT

The machine electrical system is a 24 volt negative (-) ground. Only jump from a machine with a 24 volt system that has enough extra capacity.

When the machine's batteries are dead, start the engine by connecting booster cables to the batteries of the jumping vehicle as shown below.

Connecting Booster Cables

1. Stop the engine of the machine providing the jump.
2. Put battery disconnect switch (1) in the “OFF” (F) position.
3. Connect one end of booster cable (2) (red) to the positive (+) terminal of battery (A) of the machine, and the other end to the positive (+) terminal of the battery (B) providing the jump.
4. Put battery disconnect switch (1) in the “ON” (D) position.
5. Connect one end of booster cable (3) (black) to the negative (-) terminal (B) of the battery providing the jump, and the other end to the frame (C) of the machine to be started. As sparks may fly when the last connection is made, connect the cable as far away from batteries as possible.
6. After securely connecting the booster cables, start the engine of the machine providing the jump.
7. Start the engine of the machine with the dead batteries.
8. After the engine starts, disconnect cables (3) and (2), following the procedure described below in “Disconnecting the Booster Cables”.

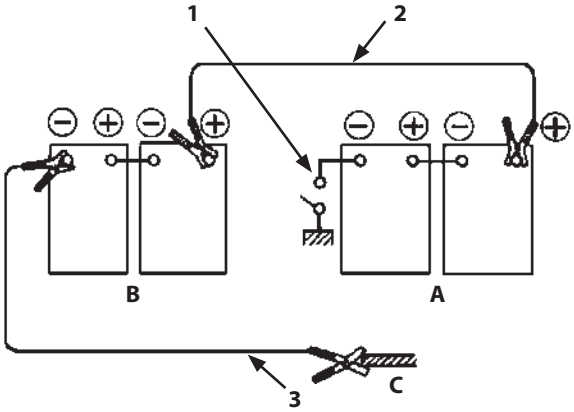

Connecting Booster Cables

MDC1-03-001-3 ja

A	Batteries Being Jumped	C	Machine’s Frame
B	Batteries Providing Jump		

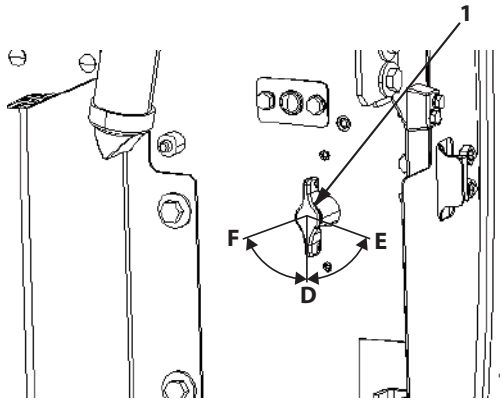

Battery Disconnect Switch

MDFY-07-097-5 ja

D	ON position	F	OFF
E	OFF position (with communication terminal power supply ON)		

Disconnecting the Jumper Cables

1. Disconnect black negative (-) cable (3) from the machine frame (C) first.
2. Disconnect the other end of black negative (-) cable (3) from the battery of the machine (B) providing the jump.
3. Disconnect red positive (+) cable (2) from the positive terminal of the machine (B) providing the jump.
4. Disconnect red positive (+) cable (2) from the positive terminal of the machine's battery(A).

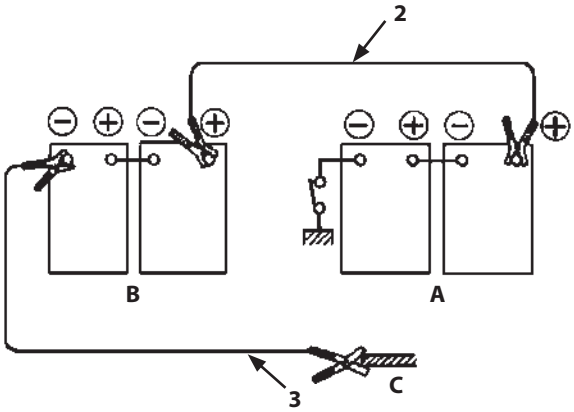

Disconnecting the Jumper Cables

MDC1-03-001-4 ja

A	Batteries Being Jumped	C	Machine's Frame
B	Batteries Providing Jump		

Stopping the Engine

Engine Stop Procedure

1. Lower the bucket and the blade (ZX120-7 class only) to the ground before stopping the engine, except in special circumstances.

SA-2590 ja

2. Pull pilot shut-off lever (3) to the LOCK position.

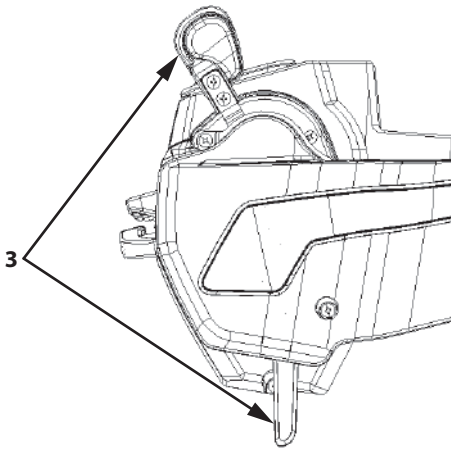

LOCK Position

MDFY-01-088-3 ja

3. Turn engine control dial (1) to the slow idle position and run the engine for 5 minutes to cool the engine.

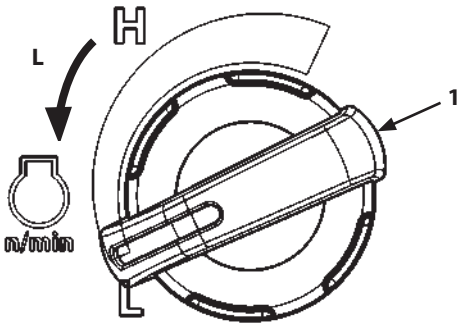

MDFY-01-010-3 ja

IMPORTANT

- **If an engine equipped with a turbocharger is stopped without first performing the cool down operation, the lubricant on the turbocharger bearing surfaces may dry out due to the intense heat inside the turbocharger, possibly causing damage to the turbocharger.**
- **Do not idle for excessively long periods. Observe local and federal engine idling regulations.**

4. Turn key (2) to the OFF position to stop the engine.

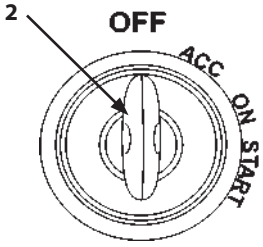

MDC1-01-502-1 ja

If the engine fails to stop, even with the key in OFF (Emergency Stop):

If the engine does not stop even if key (2) is turned OFF, due to a fault with the machine, press engine emergency stop switch (4) downward. The engine will stop. Return engine stop switch (4) to its original position (upward).

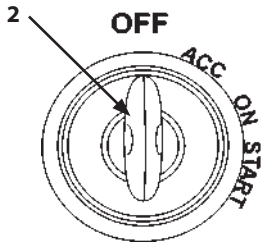

MDC1-01-502-1 ja

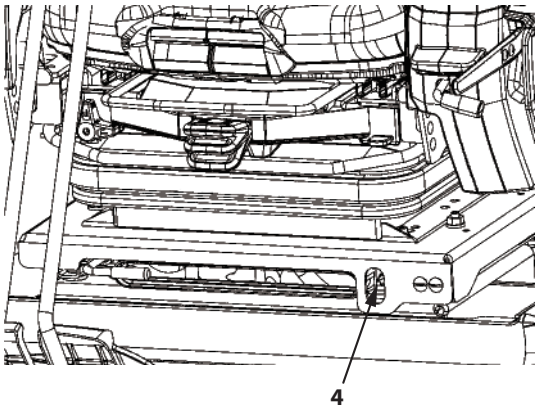

MDFY-01-024-3 ja

CAUTION

Do not use engine stop switch (4) unless absolutely necessary. Alternatively, if the engine stops due to machine failure, do not start the machine until it has been repaired.

IMPORTANT

Do not turn the battery disconnect switch OFF when the lamp is lit. Doing so may cause damage to the machine and/or system malfunction.

Engine Auto-Stop at Extremely Low Temperatures

WARNING

This function stops the engine automatically. Take extra care about what work is being performed and the work environment when using this function.

IMPORTANT

If the machine is left without being operated in an environment where temperatures reach -20°C or lower for a long period of time, exhaust gas particles may accumulate in the aftertreatment device, and this may result in damage to the device.

In an environment where temperatures reach -20°C or lower, the engine will automatically stop 60 minutes after the pilot shut-off lever is set to the LOCK position. Message (1) "Engine Shut-Down Soon." is displayed on the monitor 30 seconds before the engine stops and the indicator flashes. The buzzer also sounds. The buzzer sounds once at 30 seconds before, and then continuously from 15 seconds before the engine stops. The engine speed drops to idle, and then stops after 15 seconds. If the pilot shut-off lever is set to the UNLOCK position before the engine stops, it is unlocked and the engine does not stop.

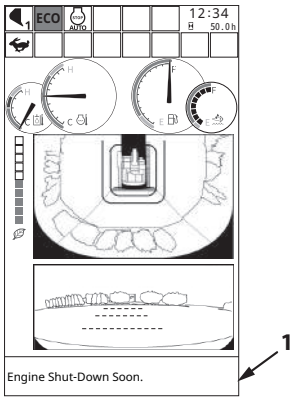

MDFY-MT-134-3 en_GB

IMPORTANT

If the engine does stop, turn the key switch to ACC or OFF once and then turn it to START to restart the engine. After the engine has stopped automatically, turn the key switch OFF before leaving the operator's station for any length of time. Do not leave the machine after auto shutdown. Doing so may cause the batteries to discharge.

NOTE

The engine may stop automatically under certain conditions, regardless of whether the auto shut-down function is ON or OFF.

Travel Levers and Pedals

Travel Operation

The machine can be controlled during travel by both levers and pedals.

WARNING

If travel motor (M) is located at the front of the machine, the machine will move in the reverse direction to that shown on the operation instruction decal. Normal travel operation is when travel motor (M) is at the rear, and the front idler is at the front of the machine.

NOTE

- *An arrow mark (1) is stuck on the inside surface of the side frame to indicate the front of the machine.*
- *A travel lever damper is provided on this machine to ensure smooth travel operation. For that reason, the feel of the travel lever or pedal may be heavy in extreme cold (-20 °C or below). This is caused by an increase in oil viscosity, not a malfunction.*

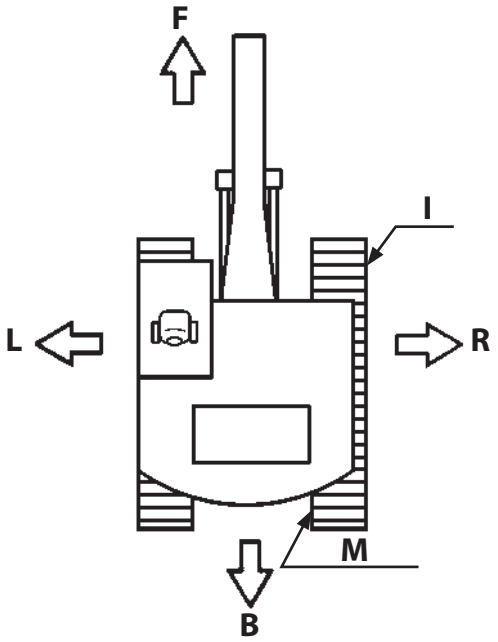

M104-01-038-3 ja

I	Front Idler	B	Rear
M	Travel Motor	R	Right
F	Front	L	Left

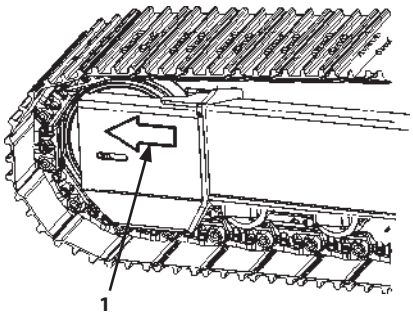

M178-03-001-2 ja

- Forward/Reverse Travel
  Push both left and right levers (or both pedals) forward at the same time to drive the machine forward. Pull down the two levers (or pedals) rearward to drive the machine in reverse. Travel speed can be controlled by the operation stroke of the travel levers and pedals.
- Slopes
  Never attempt to ascend or descend slopes steeper than 35 degrees (70 %).
  Slowly operate the travel levers (or pedals) when descending a slope. When the travel levers are placed in the neutral position, brakes are automatically applied and the machine stops.

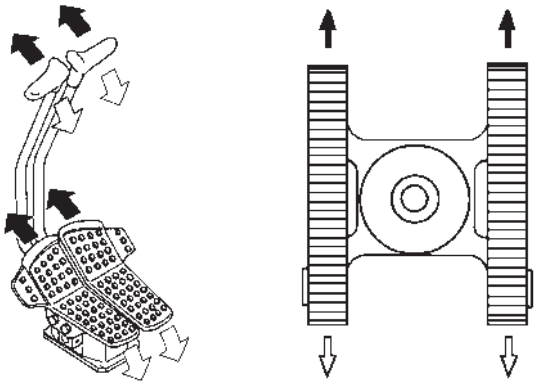

Forward/Reverse Travel

M104-04-003 ja

- Pivot Turn
  The machine can be turned by driving just one of the two crawlers with either left or right travel levers (or pedals).

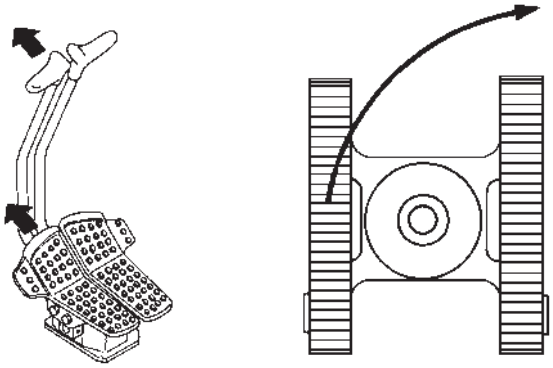

Pivot Turn

M104-04-005 ja

- Spin Turn
  The machine can turn on a dime by driving the two crawlers in opposite directions to each other at the same time by pushing one lever (or pedal) forward and the other lever (or pedal) in reverse.

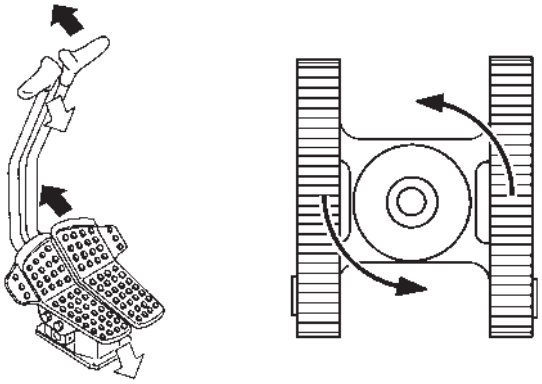

Spin Turn

M104-04-007 ja

Travel Mode Switch

WARNING

Do not change travel mode switch (1) while traveling. In particular, switching to fast mode while descending a slope is very dangerous. Always stop the machine before changing travel mode switch (1).

Turn travel mode switch (1) on the switch panel to the desired position to switch the travel mode (Fast/Slow).

- To go faster: Turn travel mode switch (1) to (2).
- To go slower: Turn travel mode switch (1) to (3).

2- (Fast)

3- (Slow)

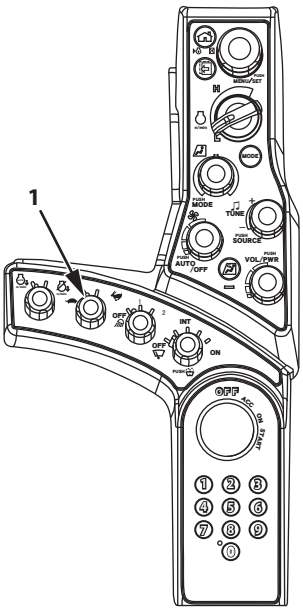

MDFY-01-002-3 ja

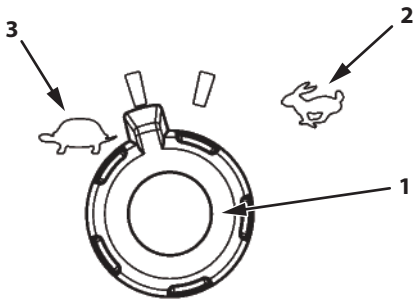

MDFY-01-012-1 ja

Traveling on Soft Ground

Avoid traveling on very soft ground that does not have sufficient strength to firmly support the machine. When traveling on soft ground is unavoidable, operate carefully and observe the following points.

- If the machine is operated on very soft ground or becomes stuck, it may be necessary to clean the track frame area. Do not go in so far that the machine cannot be towed out, in the worse case scenario.
- If the machine can no longer move, put the bucket on the ground and use the boom and arm functions to pull the machine toward firm ground. When doing so, operate the boom and arm at the same time as the travel lever to avoid applying excessive force.
- If the belly of the machine is high-centered, or if the undercarriage is blocked by mud and/or gravel, use the boom and arm to support the machine and lift up one side of the tracks at a time. Clear the mud and/or gravel so the machine can get out. Rotating the raised track back and forth can clear it of stones and mud.
- Tow the machine if it becomes stuck in soft ground and cannot escape on its own. For how to fasten wire ropes when doing so, refer to the section “Retrieval”.

M104-05-012 ja

Raising One Track Using the Boom and Arm

WARNING

Be careful during this operation as the machine may slide to the side. Keep the angle between boom and arm 90 to 110°.

1. Swing the upperstructure 90 °.
2. Keep the angle between boom and arm 90 to 110 ° and position the bucket's round side on the ground.

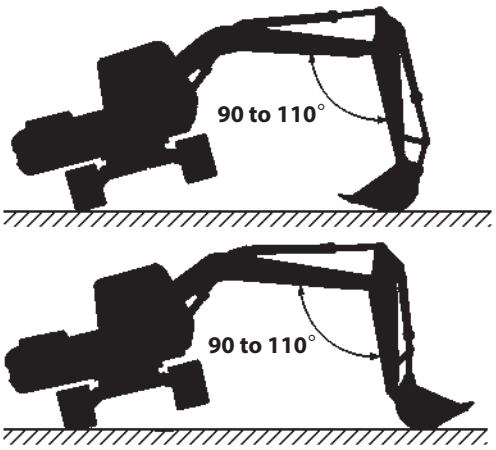

M104-05-013-1 en_GB

3. Place supports, such as blocks, under the frame to support the machine.

IMPORTANT

When the machine is modified for use as a face shovel by installing the hoe bucket in reverse, avoid raising the machine above the ground using the front attachment with the bucket cylinder fully extended. Excessive loads will be applied to the pins around the bucket and the bucket cylinder, resulting in breakage of the pins.

MZX5-04-003 ja

Retrieval

CAUTION

Cables, straps, or ropes can break causing serious injury. Do not tow the machine with damaged chains, frayed cables, slings, straps, or wire ropes. Always wear gloves when handling cable, straps or wire ropes.

When it becomes unable to evacuate from soften ground by machine itself, retrieve the machine with another machine by attaching the wire rope (1) as shown. Be sure to attach the wire ropes (1) around the track frames of both machines as shown. To prevent the wire ropes (1) from being damaged, place protective material (2) between the track frame and the wire ropes (1).

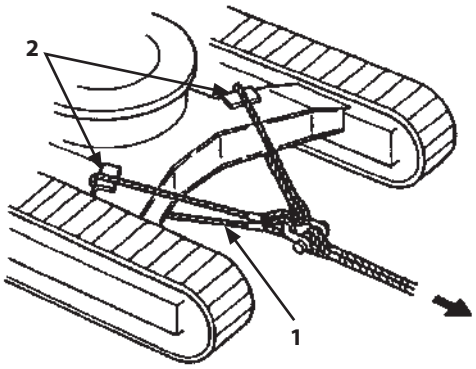

M104-05-010-4 ja

IMPORTANT

- **Track frame has two shackle holes; The center shackle hole (A) on the track frame is provided to pull lightweight objects. The shackle holes (B) on the bottom of the track frame are used to secure the machine for transportation.**
- **Do not use these shackle holes on the track frame for retrieval the machine. This may damage the holes (A) (B).**
- **Refer to the instructions on "Shackle Hole Usage" for using the center shackle hole (A) appropriately.**

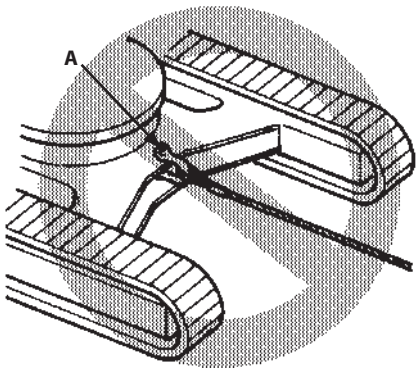

MZX5-04-004-2 ja

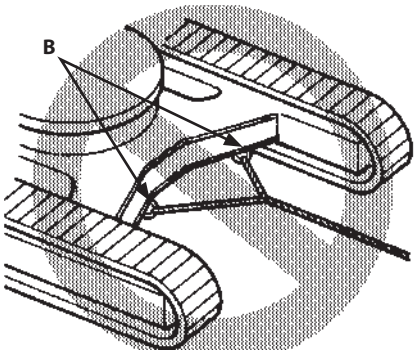

MZX5-04-005-2 ja

Operating in Water or Mud

The machine can be operated in water up to the upper edge of the upper rollers (A) only if water is flowing slowly, and the worksite ground is firm enough to prevent the machine from sinking past the upper edge of the upper roller.

If the river bed is not flat or the flow of water is strong, make sure the swing internal bearing, swing pinion, gears and the center joint are not submerged in water or sand.

On soft ground, the machine may gradually sink. Always pay attention to the undercarriage of the machine.

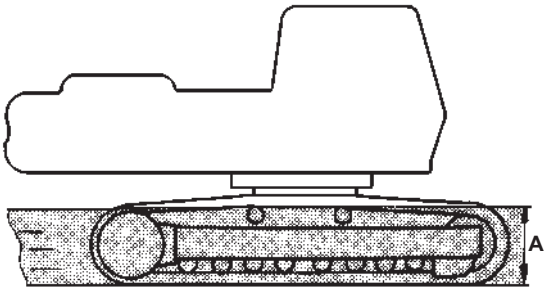

M104-05-009-1 ja

Model	A (mm)
ZX120-7 class	660
ZX160-7, 180-7, 200-7, 240-7 class	770
ZX300-7, 330-7 class	860

IMPORTANT

If the swing bearing, swing pinion, swing internal gear and center joint have been submerged, remove the drain plug to drain mud and water. Clean the swing area. Install the plug and lubricate swing internal gear and swing bearing. The grease must be replaced immediately or the parts disassembled and serviced. In such case, stop operation and contact your authorized dealer.

Swing Internal Gear Capacity

ZX120-7 class	9 L
ZX160-7, 180-7, 200-7, 240-7, 300-7 class	17 L
ZX330-7 class	19 L

Lubricate swing internal gear.

Parking the Machine on Slopes

WARNING

Avoid parking the machine on slopes. The machine may tip over, possibly resulting in personal injury.

If parking the machine on a slope is unavoidable: Thrust the bucket teeth into the ground. Return the control levers to neutral and set pilot shut-off lever to the LOCK position. Block both tracks.

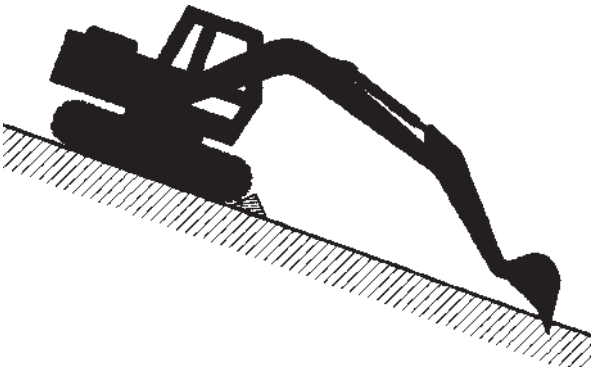

SA-2273 ja

Parking

IMPORTANT

If the machine is parked with cab windows or the door open, electrical components may be damaged if rain is blown inside the cab. Close all windows and the door when parking the machine.

How to Park

1. Park the machine on a firm, level surface. Stand the arm vertically and lower the bucket and blade (ZX120-7 class) to the ground.
2. Turn engine control dial (1) counterclockwise fully to the Slow Idle position. Run the engine for approximately 5 minutes to cool the engine.
3. Turn the key to the OFF position. Remove the key from the key switch.

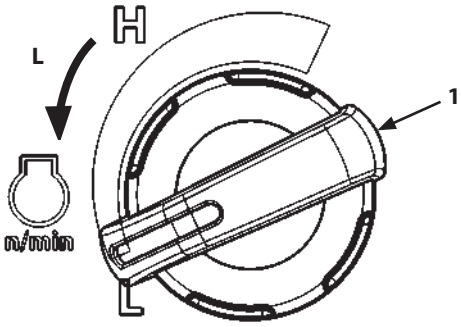

MDFY-01-010-3 ja

4. Always set pilot shut-off lever (2) to the LOCK position.
5. Before leaving the machine, always close and lock the windows, cab door and all covers.

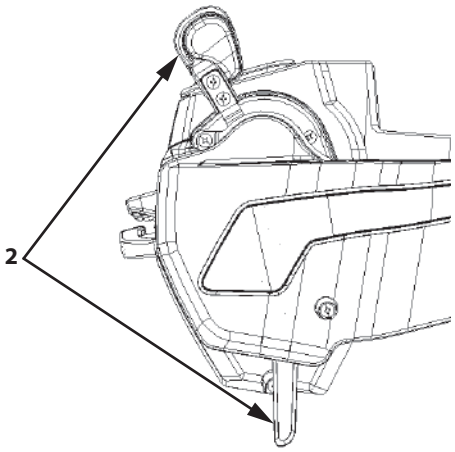

LOCK Position

MDFY-01-088-4 ja

Prohibition of Sudden Control Operations when Traveling at High Speed

When traveling at high speed, do not perform operations such as emergency stop.
Do not perform operations such as repeated switching between forward and reverse.
Repetition of these kinds of operation increases the load on rollers, front idler and travel device, and risks damaging internal parts of the machine and shortening their life.

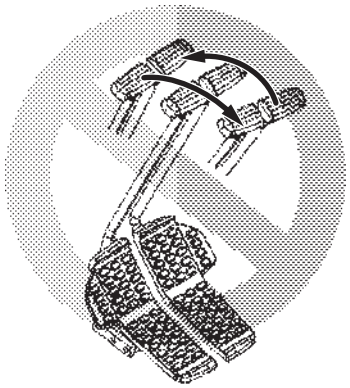

MJAQ-04-001 ja

Prohibition of Traveling for Long Periods

When the machine travels for a long period of time, the temperature of parts such as the rollers, front idler and travel device increases. This risks damage to internal seals, oil leakage and damage to other components.
If there is no option but to travel for an extended period, contact your authorized dealer.

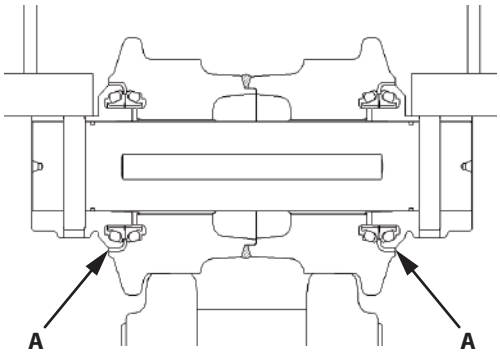

Lower Roller

MDFY-04-001-1 ja

A- Location at risk of oil leakage

MEMO

Control Lever (ISO Pattern)

WARNING

- **Never extend any part of body beyond window bars or frame, as it could be crushed, if boom control lever is accidentally bumped or otherwise engaged.**
  Never remove the window sash bar.
- **Make sure you know the location and function of each control before operating.**
- **Do not change the operation pattern of the control lever. Failure to do so may result in mistaken operation of the machine.**

A label showing the control patterns of the levers and pedals is attached on the right side in the cab.

When a lever is released, it will automatically return to neutral, and that machine function will stop.

1- Arm Roll-Out
2- Arm Roll-In
3- Swing Right
4- Swing Left
5- Boom Lower
6- Boom Raise
7- Bucket Roll-In
8- Bucket Roll-Out

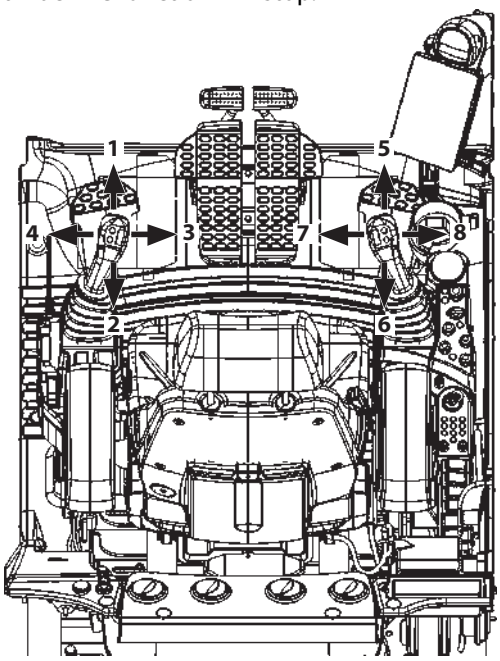

MDFY-05-001-1 ja

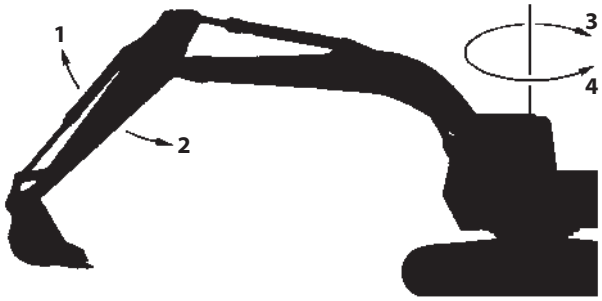

M104-05-001-1 ja

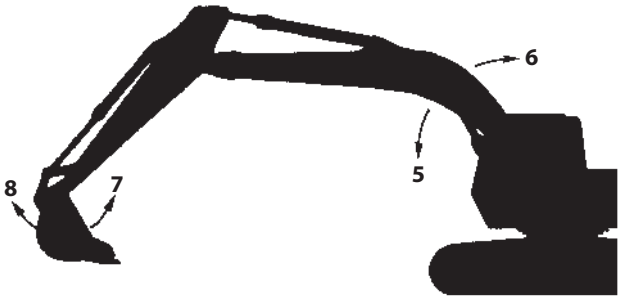

M104-05-002-1 ja

Pilot Shut-Off Lever

Pilot shut-off lever (1) functions to prevent the machine from being mistakenly operated when the operator accidentally touches the control lever or pedals when climbing in or out of the machine.

WARNING

To lock it, put pilot shut-off lever (1) in the LOCK position. If in an intermediate position, it is not locked, which is dangerous. When leaving the operator's seat, always stop the engine and put pilot shut-off lever (1) in the LOCK position. Make sure it is in the LOCK position before transporting the machine or leaving the machine at the end of a shift.

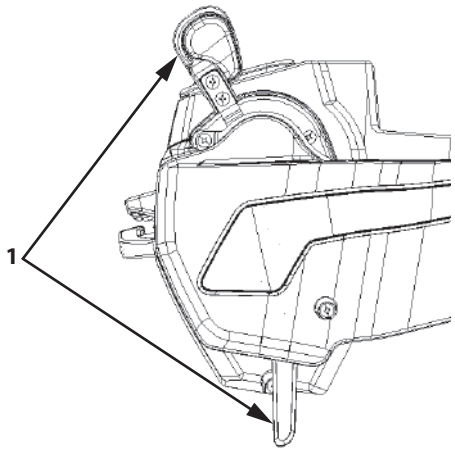

LOCK position

MDFY-01-088-2 ja

Operating the Pilot Shut-off Lever When Leaving the Operator's Station

1. Park the machine on a firm, level surface. Lower the bucket and blade (ZX120-7 class) to the ground. Return all control levers to neutral. Properly shut down the engine.
2. Put pilot shut-off lever (1) in the LOCK position.

Operating the Pilot Shut-off Lever Before Starting Work

Confirm that pilot shut-off lever (1) is in the LOCK position before starting the engine. The engine will not start in the UNLOCK position.

Before starting work, slowly switch pilot shut-off lever (1) from the LOCK position to the UNLOCK position.

Before unlocking, confirm that all control levers and pedals are in neutral and that no part of the machine is in motion.

WARNING

With all the levers and pedals in neutral, if simply setting pilot shut-off lever (1) in the UNLOCK position causes any part to move, the machine is malfunctioning. If this happens, immediately return pilot shut-off lever (1) to the LOCK position, and stop the engine. Contact your authorized dealer.

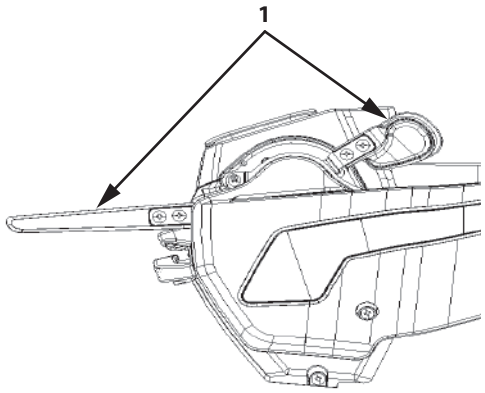

UNLOCK position

MDFY-01-113-2 ja

Warming-Up Operation

In cold weather, warm up the machine until coolant and hydraulic oil temperature increases to the appropriate operating temperature.

IMPORTANT

- **The appropriate hydraulic oil operating temperature on this machine is 50 to 80 °C. Hydraulic components may be seriously damaged if the machine is operated with low temperature hydraulic oil. In particular, relieving with an attachment other than a bucket while the oil is cold may lead to damage to hydraulic components, so do not do so. If warming up machine hydraulic system with the boom, arm and or bucket cylinders being held at each stroke end operation, pause for 5 to 10 seconds after every hydraulic system relief for 10 to 15 seconds.**
- **When the hydraulic oil temperature is 5 °C or lower, the pump torque is restricted to protect the engine.**

1. Even after engine starts, leave engine control dial (1) in the slow idle position.
   (Do not operate the machine until the needle of coolant temperature gauge (2) starts swinging.)
2. After the needle of coolant temperature gauge (2) starts swinging, turn engine control dial (1) to approx. Medium position.
3. Operate the boom, arm and bucket cylinders slowly to each stroke end several times. If the machine is equipped with various attachments, operate the attachment function slowly to allow hydraulic oil to circulate through the system.When doing so, relieving the circuit may cause damage to hydraulic components. Do not relieve any attachment other than a bucket during warmup.
4. Operate the travel and swing functions slowly to allow hydraulic oil to circulate through the systems.

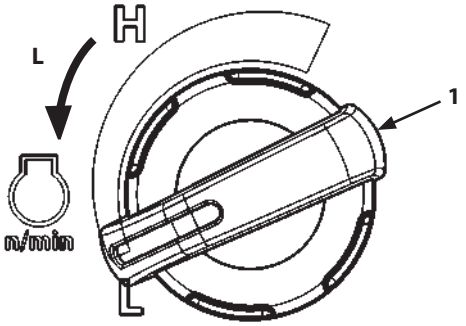

MDFY-01-010-3 ja

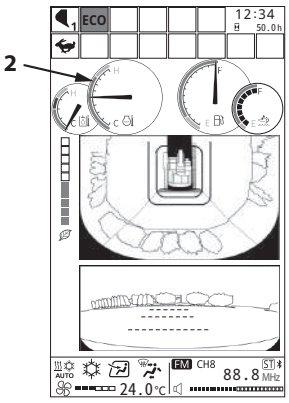

MDFY-MT-100-10 ja

5. Warming-up operation ends after the above operation is completed.

NOTE

- *The engine speed will be kept to slow idle speed just after the engine starts. When engine speed control indicator (3) is displayed, slow idle speed will be maintained. When the coolant temperature or hydraulic oil temperature is low, the time will be longer. The engine speed will be kept to slow idle speed even if engine control dial (1) is not set in the slow idle position.*
- *The warm-up system automatically operates after keeping slow idle speed, and the engine speed will temporarily increase even if engine control dial (1) is in the slow idle position.*

CAUTION

Do not attempt to operate the machine when engine speed control indicator (3) is lit. The engine speed may change after the slow idle period and operation speed of work device may suddenly increase, which may cause a serious accident.

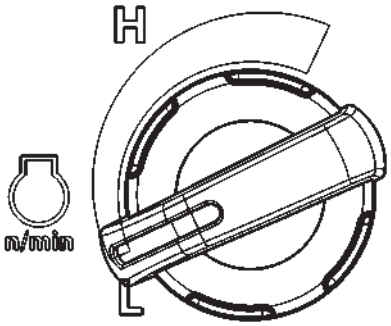

MDFY-01-010 ja

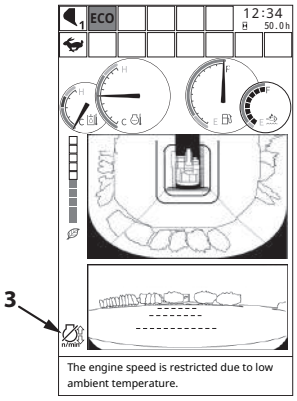

MDFY-MT-131-2 en_GB

Engine Speed Control

Increase and decrease the engine speed using engine control dial (1) located on the switch panel.

- Turn engine control dial (1) clockwise to increase the engine speed or counterclockwise to decrease the engine speed.
- Note that the auto-idle function is deactivated if engine control dial (1) is operated while the engine is running at the auto-idle setting.
- Before stopping the engine, always turn engine control dial (1) counterclockwise to the stop (to the slow idle setting). Run the engine five minutes to cool the engine. Then, turn the key switch to the OFF position to stop the engine.

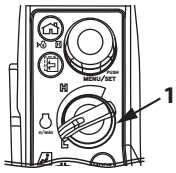

MDFY-01-094-5 ja

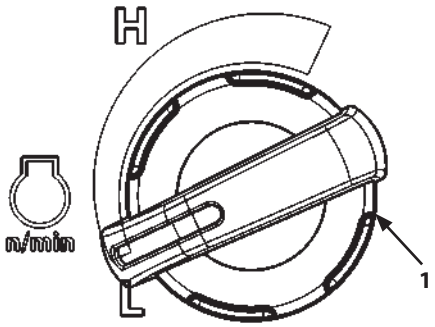

MDFY-01-010-4 ja

NOTE

- *The engine speed is kept to slow idle speed just after the engine starts. While engine speed control indicator (3) is displayed, slow idle speed is maintained. This period lasts longer when the coolant temperature or hydraulic oil temperature (including air intake temperature of ZX160-7 and 180-7 class) is low. Note also that the engine speed is kept to slow idle speed even when engine control dial (1) is not set in the slow idle position.*
- *After the slow idle period, the warm-up system operates automatically, and the engine speed increases temporarily, even if engine control dial (1) is set in the slow idle position.*

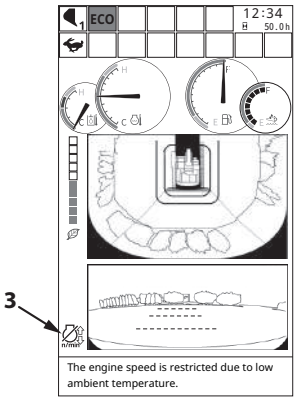

MDFY-MT-131-2 en_GB

CAUTION

Do not attempt to operate the machine while engine speed control indicator (3) is lit. If the machine is operated during this period, the engine speed may change suddenly upon completion of the slow idle period. This could cause a sudden increase in the speed of operation of the machine and result in a serious accident.

Auto-Idle

Auto-Idle Function

When auto-idle switch (3) is turned to the A/I ON position, approximately 4 seconds after all control levers are returned to neutral, the engine speed decreases to the auto-idle setting to reduce fuel consumption.

When any control lever is operated, the engine speed will immediately increase to the speed set using engine control dial (2).

IMPORTANT

- **Before starting operation, always check if auto-idle indicator (1) is turned ON or OFF. If the lamp is lit, the auto-idle function is activated.**
- **When auto-idle switch (3) is turned to the A/I ON position, always be aware of the setting of engine control dial (2). If the engine speed is set high with engine control dial (2), and the operator is not aware of the high engine speed setting, the engine speed will unexpectedly increase when any control lever is operated, causing the machine to move unexpectedly, possibly resulting in serious personal injury.**

WARNING

Be sure to turn auto-idle switch (3) to the A/I OFF position when doing work that would be dangerous if the machine were to move unexpectedly, especially when loading/unloading the machine for transportation.

NOTE

- *Auto-idle control may not work until the end of the warm-up.*
- *The auto-idle control function does not operate when the aftertreatment device is regenerating.*

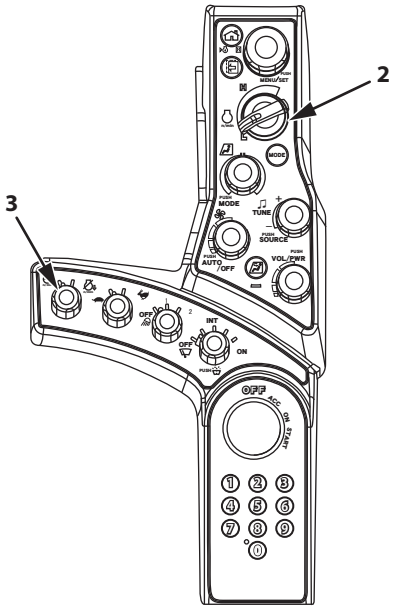

MDFY-01-002-4 ja

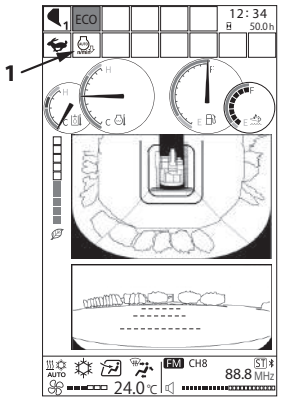

MDFY-MT-133-1 ja

Auto-Idle ON/OFF

Note that the auto-idle function can only be turned ON or OFF using auto-idle switch (3) when the key switch is in the ON position.

The ON or OFF status can checked using icons (1) and (2).

Icon (1) lit: Auto-idle function is ON

Icon (2) lit: Auto-idle function is OFF

- When icon (1) is lit, turning auto-idle switch (3) to OFF will toggle icon (2) and deactivate the auto-idle function.
- Be aware that turning engine OFF using the key does not deactivate the auto-idle system switch if auto-idle switch (3) remains in the A/I ON position (icon (1) is lit). When the engine is restarted, the auto-idle system remains activated. Icon (1) will flash for 10 seconds and then stay lit.

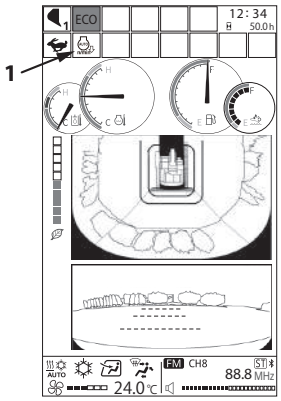

MDFY-MT-133-1 ja

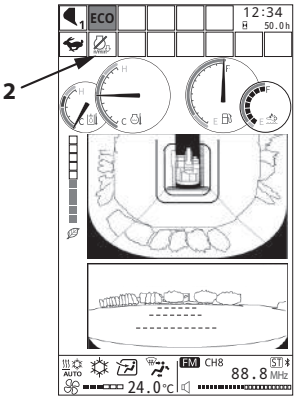

MDFY-MT-153-1 ja

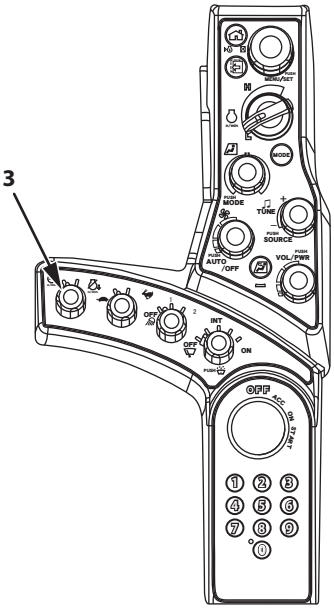

MDFY-01-002-5 ja

Auto Shut-Down

WARNING

This function automatically stops the engine. Take extra care on the work and work environment when using this function.

When the auto shut-down function is turned ON, the engine automatically stops after the preset time at the state in which the pilot shut-off lever is LOCK position. 30 seconds before the engine stop, monitor screen (2) displays "Engine Shut-Down Soon." message and indicator (1) starts flashing. Also the buzzer sounds. The buzzer sounds once at 30 seconds before, and continuously sounds from 15 seconds. The engine speed decreases to the idling speed, and then stops after 15 seconds. When the pilot shut-off lever is UNLOCK position before stopping the engine, the auto shut-down is disabled and the engine will not stop.

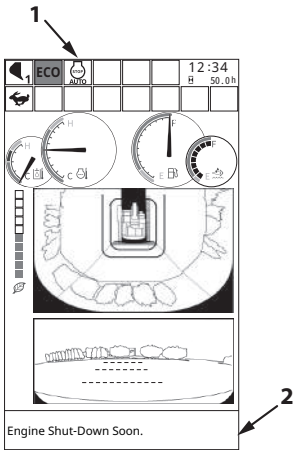

MDFY-MT-134-1 en_GB

IMPORTANT

Check whether the status of auto shutdown indicator (1) is ON or OFF. If indicator (1) is ON, the auto shut-down function will be activated.

Operating Condition

- The engine is running.
- The pilot shut-off lever is in the LOCK position.
- Coolant and hydraulic oil temperature are not high.
- The aftertreatment device is not in the process of manual regeneration.

IMPORTANT

- **When the engine is stopped by the auto shut-down function, turn the key switch to ACC or OFF once and then turn it to START to restart the engine. Turn the key switch OFF after auto shut-down when leaving the machine for long period of time. Do not leave the machine after auto shut-down. Failure to do so may discharge the batteries.**
- **Even if the auto shut-down function is ON, the engine will not stop during manual regeneration of the aftertreatment device.**
- **When the auto shut-down activates, the air conditioner will also stop.**

Setting the Auto Shut-Down Function

Auto Shut-Down: ON/OFF

1. From basic screen (1) push selector/set switch (2) to display main menu screen (3).

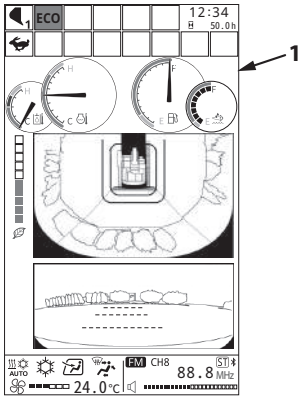

MDFY-MT-100-2 ja

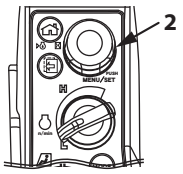

MDFY-01-094-7 ja

2. Rotate selector/set switch (2) to highlight Settings (4).
3. Push selector/set switch (2) to display Setting screen (5).

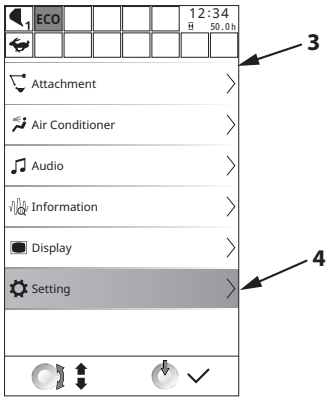

MDFY-MT-009-1 en_GB

4. Rotate selector/set switch (2) to highlight Auto Shut-Down (6).
5. Push selector/set switch (2) to display Auto Shut-Down screen (7).

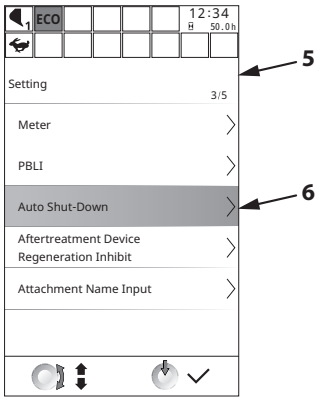

MDFY-MT-066-1 en_GB

6. Rotate selector/set switch (2) to highlight ON (9).
7. Push selector/set switch (2) to turn the auto shut-down function ON. Push selector/set switch (2) again to turn the auto shut-down function OFF.

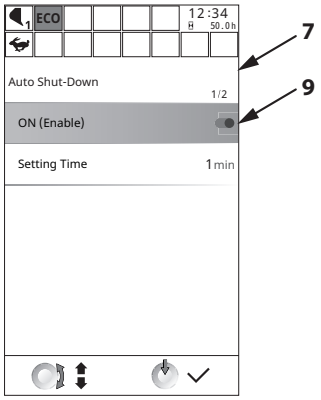

MDFY-MT-015-1 en_GB

Auto Shut-Down : Setting Time

NOTE

The setting time can only be changed when the auto shut-down function is OFF. First change the setting time.

1. On Auto Shut-Down screen (7), rotate selector/set switch (2) to highlight Setting Time (8).

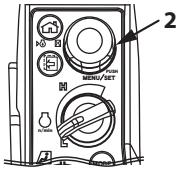

MDFY-01-094-7 ja

2. Push selector/set switch (2) and then rotate selector/set switch (2) to adjust the auto shut-down setting time.
3. Push selector/set switch (2) to make the change.

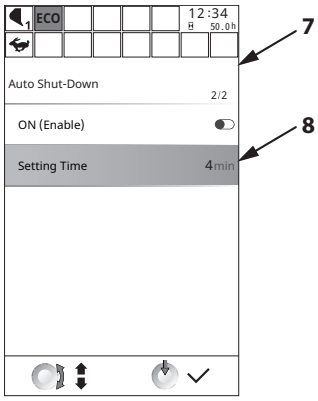

MDFY-MT-016-1 en_GB

NOTE

When the function is turned ON, the message "Engine Shut Down Soon" is displayed (10) on the monitor 30 seconds before the engine stops.

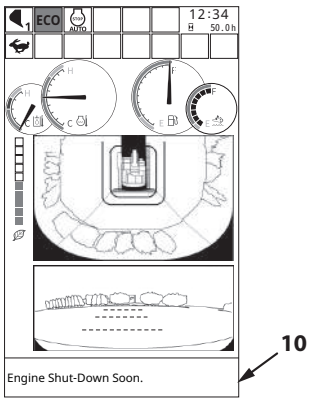

MDFY-MT-134-2 en_GB

Aftertreatment Device Manual Regeneration

Manual Regeneration Procedure

When manual regeneration is necessary, alarm icon (1) and operational guidance (2) are displayed the monitor. When these appear, it is necessary to perform manual regeneration. Before starting manual regeneration, be sure to check the following.

Check the Following

- No one around the machine
- No flammable materials near the muffler filter
- Fuel level alarm is not lit
- DEF level alarm is not lit (except ZX120-7 class)

Procedure

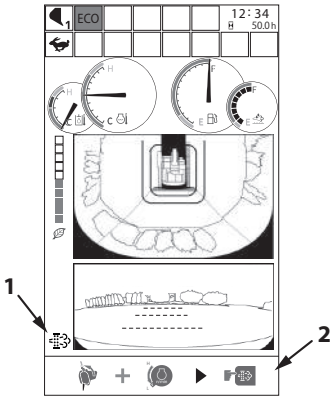

MDFY-MT-114-1 ja

1. Park the machine in a safe place. Lower the front attachment and blade (ZX120-7 class) to the ground.

SA-2590 ja

2. Put pilot shut-off lever (5) in the LOCK position.
3. Set the engine control dial to slow idle.

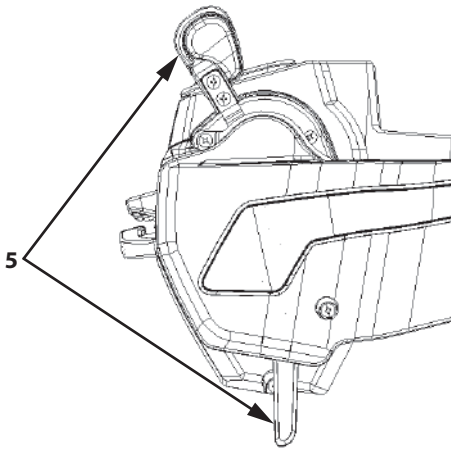

LOCK Position

MDFY-01-088-5 ja

4. Push aftertreatment device manual regeneration switch (4).

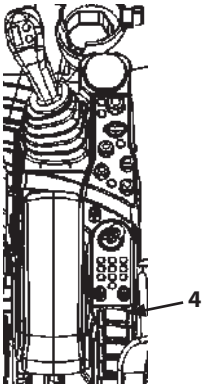

MDFY-01-001-1 ja

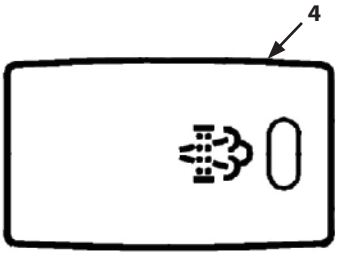

MDFY-01-118-1 ja

5. When aftertreatment device manual regeneration switch (4) is pressed, screen (3) illustrated at right is displayed and manual regeneration starts. A bar graph on screen shows the progress of the regeneration process.

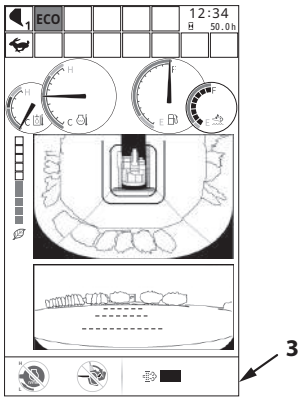

MDFY-MT-115-1 ja

IMPORTANT

Manual regeneration does not start unless the pilot shut-off lever is in the LOCK position and the engine control dial is in slow idle. If the pilot shut-off lever or the engine control dial are touched during manual regeneration, the regeneration process is aborted. If the process is aborted, start over again. Note that even if manual regeneration fails with a ZX120-7 class machine, auto-regeneration may run in some conditions. In such case, redoing manual regeneration is not possible.

6. When manual regeneration is complete, the message "Regeneration Has Completed." is displayed. If the message "Regeneration Has Failed" is displayed, start the manual regeneration process over again. The regeneration process may fail in conditions other than those mentioned above (such as sensor malfunction or low air temperature).

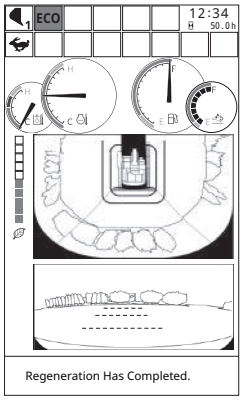

MDFY-MT-116 en_GB

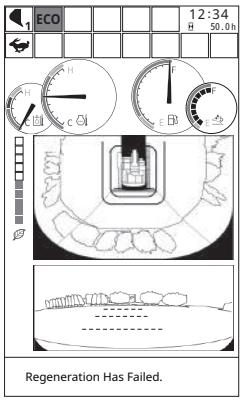

MDFY-MT-117 en_GB

NOTE

- *The engine sound may change and the engine speed may increase when manual regeneration starts. This is not a malfunction.*
- *Regeneration time varies depending on the air temperature.*
- *White smoke may come from the tail pipe temporarily during the regeneration process. This is not a malfunction.*
- *Note that manual regeneration takes less time after the machine has been operated and longer when the engine is cold.*
- *Coolant temperature may increase during manual regeneration.*

IMPORTANT

- **If regeneration has to be suspended to move the machine, push the manual regeneration switch again. "Regeneration Has Failed." is displayed on the monitor, but the machine can be operated. In such cases, manual regeneration should be performed again. Restart manual regeneration as soon as possible. (Except ZX120-7 class)**
- **If regeneration has to be suspended to move a ZX120-7 class machine, turn aftertreatment device regeneration inhibition ON.**
  "Regeneration Has Failed." is displayed on the monitor, but the machine can be operated. When the aftertreatment device regeneration inhibition is OFF, auto-regeneration may start. If you wish to interrupt regeneration, refer to Aftertreatment Device Regeneration Inhibition (1-86).
  If an aftertreatment device manual regeneration request is issued, run the manual regeneration process.
- **Depending on the working and environmental conditions, the performance of the catalyst in aftertreatment device may decrease and replacement may become necessary. After warm-up is complete, manual regeneration normally takes around 25 to 40 minutes to complete. If regeneration takes over 60 minutes, contact your nearest authorized dealer to arrange an inspection.**

Attachments

To select an attachment, select Attachments from the main menu. From the attachments screen, select the applicable hydraulic circuit and pump flow rate.

When the engine is started, bucket mode is set automatically. From the attachments screen, the following 6 attachment modes can be selected.

- Bucket 1 Mode
- Breaker Mode 1
- Breaker Mode 2
- Pulverizer Mode 1
- Crusher Mode 1
- Grapple Mode 1

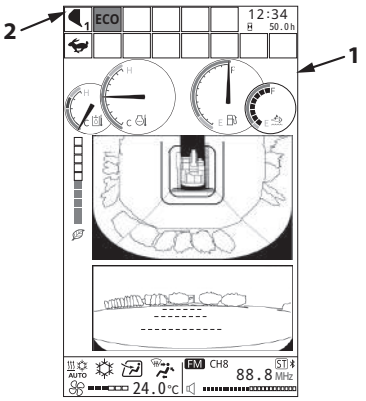

MDFY-MT-100-6 ja

The selected attachment mode is indicated by attachment mode indicator (2) on basic screen (1).
Select the most suitable attachment for the work from the table below.

	Work Mode	Description
	Bucket Modes 1 to 5	Select when using the bucket.
	Breaker Modes 1 to 5	Select when using the breaker.
	Pulverizer Modes 1 to 5	Select when using the pulverizer.
	Crusher Modes 1 to 5	Select when using the crusher.
	Vibrating Hammer Modes 1 to 5	Select when using the vibrating hammer.
	Grapple Modes 1 to 5	Select when using the grapple.
	Clamshell Modes 1 to 5	Select when using the clamshell.
	Thumb Modes 1-5	Select when using the thumb.
	Rotary Tilt Modes 1 to 5	Select when using the rotary tilt.
	Tilt Bucket Modes 1 to 5	Select when using the tilt bucket.
	Miscellaneous Modes 1 to 5	Select when using an attachment other than those mentioned above.

NOTE

The 55 attachment modes shown above are available. For bucket mode, there are 5 possible settings. Besides bucket modes, a further 16 attachment modes are available. To add or change the attachment modes, contact your authorized dealer.

Attachment Selection

1. Push selector/set switch (2) while displaying basic screen (1) to display main menu screen (3).

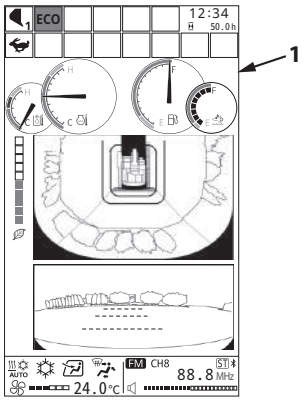

MDFY-MT-100-2 ja

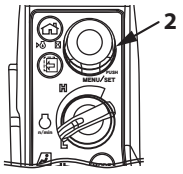

MDFY-01-094-7 ja

2. Rotate selector/set switch (2) to highlight Attachment (4).
3. Push selector/set switch (2) to display Attachment screen (5).

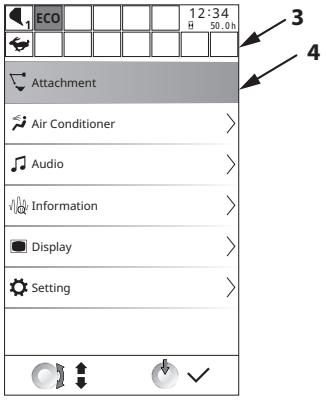

MDFY-MT-005-1 en_GB

4. Rotate selector/set switch (2) to highlight the desired front attachment.
   (In the example here, "Bucket" (6) is highlighted.)
5. Push selector/set switch (2) to enable the changes.

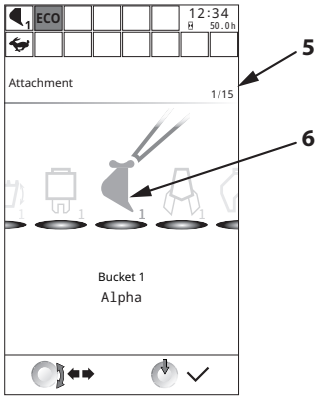

MDFY-MT-043-3 en_GB

Power Boost Switch

Power boost switch (4) is located on the top of the right control lever.

When power boost switch (4) is pushed, increased front attachment power will be supplied for about 8 seconds.

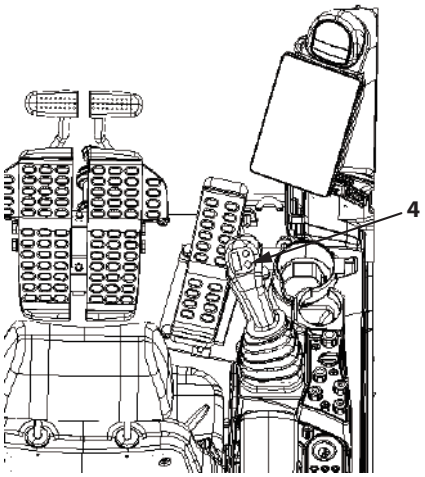

MDFY-05-002-1 ja

Power Mode

Two engine speed modes, ECO or PWR mode is selected by operating power mode switch (1).

NOTE

ECO mode is set automatically when starting the engine. Set PWR mode if necessary.

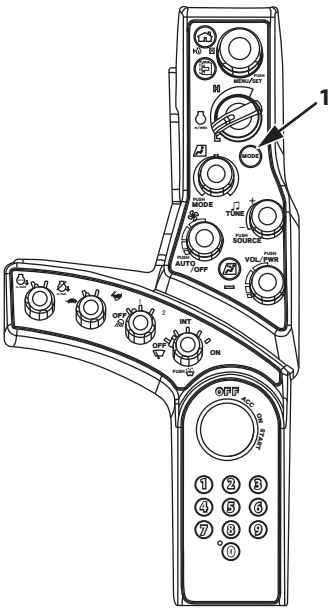

MDFY-01-002-6 ja

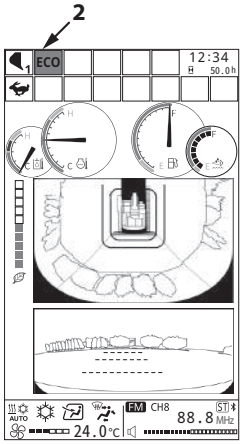

MDFY-MT-100-7 ja

ECO (Economy) Mode

Operate the machine in this mode when performing normal work.
ECO is displayed on Power Mode Display (2).

PWR (Power) Mode

Use PWR (Power) mode when extra horsepower is needed.
PWR is displayed on Power Mode Display (2).

Attachment Settings

Boom Raise Speed Priority

(Except ZX120-7, 160-7, 180-7 class)

This is a setting to prioritize boom raising speed when performing a combined operation involving boom raising, swinging and arm roll-in.
For details on how to configure this setting, refer to Boom Raise Speed Priority, in Chapter 1, Operator's Station.

The following are the 3 selectable modes and corresponding operating conditions.

OFF Turns OFF boom raise speed priority.

Auto 1 Prioritizes boom raise speed for combined operations involving boom raising, swinging and arm roll-in.
[Typical operations likely to benefit]

- Operation of lifting bucket in loaded state after digging
  (such as when loading a truck etc.)
- Operations involving moving the front attachment through air when the front attachment is a heavy one.
- Operations involving gripping a target object when a heavy front attachment is attached.

Auto 2 In addition to prioritizing boom raise speed for combined operations involving boom raising, swinging and arm roll-in, further prioritizes boom raise speed for combined operations involving boom raising and arm roll-in.
[Typical operations likely to benefit]

- Operation of lifting bucket in loaded state after digging
  (such as when loading a truck etc.)
- Operations that combine operations of booming and arm roll-in with a bucket loaded after digging, when excavating a ditch or deep hole.
- Operations involving moving the front attachment through air when the front attachment is a heavy one.
- Operations involving gripping a target object when a heavy front attachment is attached.

NOTE

Boom raise speed priority is a setting to increase the speed of the boom when performing compound operations. When applied, the boom cylinder is prioritized for receipt of hydraulic oil from the pump. However, it can only be applied when certain conditions relating to the amount of movement of the control levers and on the pump pressure are satisfied.

Front Speed Adjustment for Heavy Load

This is a setting for adjusting the speed of the front attachment a large load is being handled.
Adjusting the setting increases or decreases the speed of the front attachment.

[Typical operations likely to benefit]

- Operation of front attachment when a large load is being handled.

For details on how to configure this setting, refer to Front Speed Adjustment for Heavy Load (ECO) (PWR) in Chapter 1, Operator's Station.

Operating Backhoe

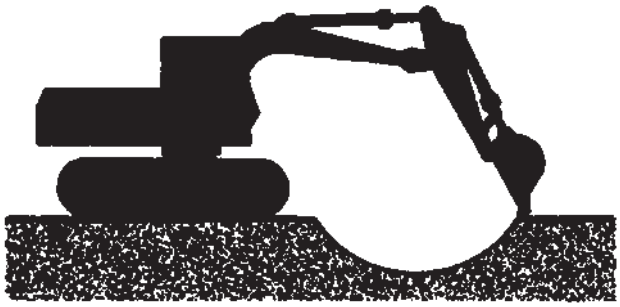

M107-05-037 ja

- Use the appropriate arm and bucket for the work. (Refer to Bucket Types and Applications in Chapter 12, Specifications.)
- Pull the bucket toward the machine using the arm as the main digging force.
- When soil sticks to the bucket, remove it by moving the arm and/or bucket rapidly back and forth.
- Excavate with shallow strokes, keeping the teeth of the bucket aligned with the digging direction and using the full length of the arm stroke.
- When trenching a straight line, position the tracks parallel to the trench. After digging to the desired depth, move the machine as required to continue the trench.
- When operating the front attachment, leave some room at the stroke end of the cylinder.

IMPORTANT

- **When digging at an angle, avoid striking the tracks with the bucket teeth.**
- **When lowering the boom, avoid stopping suddenly as this will shock the machine. Lower the boom smoothly to avoid shocking the machine.**
- **When digging a deep excavation, avoid striking the boom or bucket cylinder hoses against the ground.**
- **When operating the machine with the blade (if equipped) positioned towards the front, take care to ensure that the bucket teeth do not come into contact with the blade.**

Shovel

Backhoe operation digs the ground using the bucket in a roll-in motion. Face shovel operation digs the ground using the arm cylinder in a scraping motion.

WARNING

Take care not to hit the cab by rolling in too far when the bucket is inverted. Be careful not to hit the cab with the teeth of the bucket when rolling the arm in.

IMPORTANT

If a bucket hook is mounted, the hook may hit the arm if the bucket is rolled in to far. Take care not to hit it.

- For face shovel operation, dig the ground using the arm cylinder in a scraping motion.
- When underground water is expected, make a slope angle of 2 to 3° to drain the water as shown.

NOTE

Because of the hydraulic cylinder structure, the digging force during face shovel operation is smaller than for backhoe operation.

Warning about Rolling Too Far with the Bucket

MZX5-05-003-2 ja

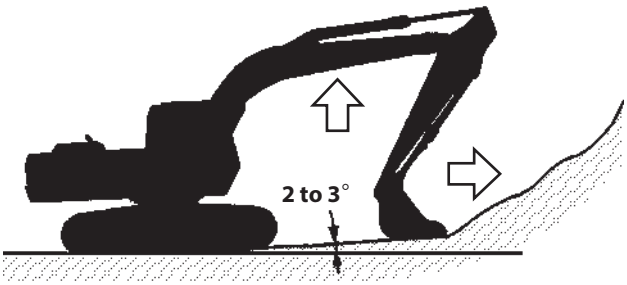

M104-05-020-1 en_GB

Grading Operation

Operate the boom, arm, and the bucket in such a way that the bucket teeth move horizontally, constantly keeping them perpendicular to the ground during grading work.

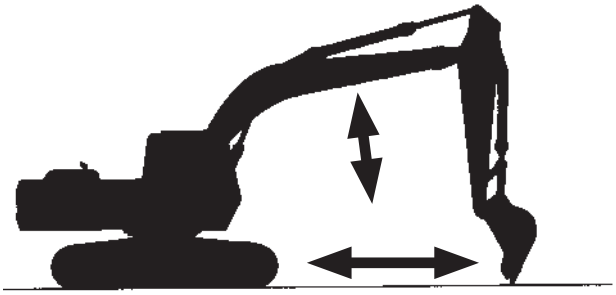

M104-05-017-1 ja

IMPORTANT

Do not pull or push dirt with the bucket when traveling. Excess force will be applied on its parts, and the machine may be damaged.

1. When leveling ground toward the machine, while holding the boom up, gently roll-in the arm. Once the arm moves past the vertical position, slowly lower the boom to allow the bucket to maintain a smooth surface.
2. Reverse the directions in step 1 to perform arm roll-out operation.
3. Perform slope finishing work using the same procedure described in steps 1 and 2.

Do Not Strike the Ground with Bucket Teeth

WARNING

Forcibly striking the bucket teeth on the ground may result in personal injury from flying debris. It will also shorten the service life of each part on the front attachment.

If the bucket teeth are forcibly struck on the ground, it shortens the service life of the front-end attachment parts (especially the bucket).
When digging a hard gravel layer, use the upwards digging force of the bucket. Operate the boom, arm and the bucket simultaneously so that the bucket teeth efficiently bite into the ground.
Flying debris may result in personal injury.

Avoid Hammer Work

WARNING

As the bucket body has a curved surface, hammer work or piling work is very dangerous. Doing so may damage the bucket and front attachment.

Do not attempt to use the bucket for hammering or piling work.
Doing so may damage the bucket and front attachment, causing personal injury. It is also dangerous, so do not do it.

MZX5-05-004 ja

Avoid Abusive Operation

Do not attempt to add additional digging force by using travel, or raising the rear of the machine to use the machine's weight.

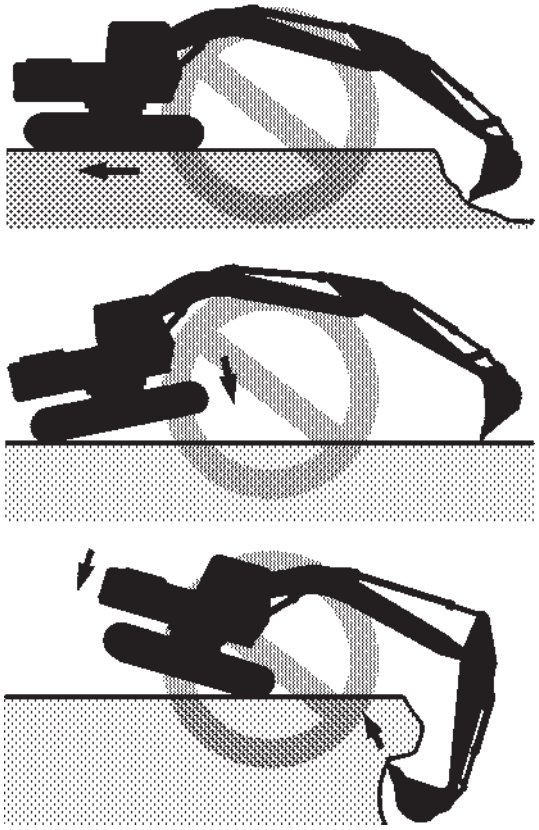

MZX5-05-005 ja

Never Move an Object Sideways with the Bucket

For example, do not swing the bucket to level material and do not strike objects sideways with the bucket.
Doing so may damage the front-end attachment and/or shorten the life of the swing system.

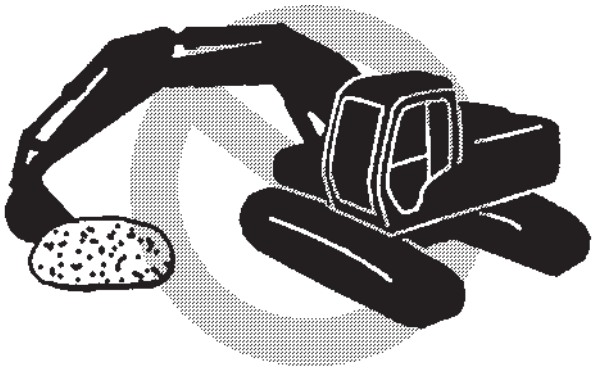

MZX5-05-006 ja

Retracting the Arm and Bucket

Pay attention to the following when installing cab equipment (optional) such as OPG front guard, OPG head guard, rain visor, cab top lights (4 lights), etc.

CAUTION

When the machine is equipped with the cab equipment mentioned above, the teeth of the bucket may hit the cab equipment if the arm is retracted excessively. Be careful not to hit the cab equipment with the teeth of the bucket when retracting the arm.

M107-05-072 ja

Never use Wide Track Shoes on Rough Ground

Never use wide track shoes on rough ground such as rocks, sand or gravel. Wide track shoes are designed for soft ground.

It may result in bending of shoes and/or loosening of shoe bolts, and may damage other undercarriage components, such as track links and rollers.
(Refer to “Shoe Types and Applications” in Chapter 12, “SPECIFICATIONS”.)

Using the Towing Hole on the Track Frame

The track frame has a hole (A) for attaching a shackle (1) and towing light weight objects.

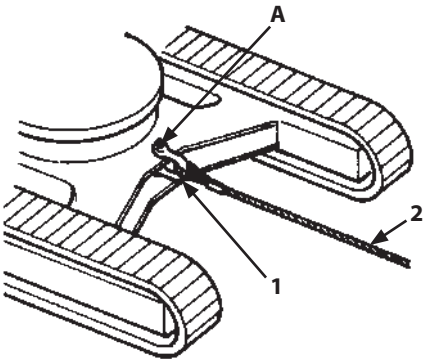

M104-05-011-2 ja

IMPORTANT

Always follow the rules below when towing a light weight object using hole (A). The frame and/or hole (A) may be damaged otherwise.

- Towing limits are as follows.
  ZX120-7 class: 44100 N (4500 kgf) or less
  ZX160-7, 180-7 class: 53900 N (5500 kgf) or less
  ZX200-7, 240-7, 300-7, 330-7 class: 73600 N (7500 kgf) or less
- Be sure to use a shackle (1).
- Keep the wire rope (2) horizontal, straight, and parallel to the tracks.

Move the machine slowly in the slow idle speed mode.

Pilot Accumulator Functions

Pilot accumulator (1) is a pressure storage reservoir in the control circuit which can provide pressure for operation of the control circuit even after the engine has stopped.
So even after the engine stops, front attachment can still be lowered using the control lever and the weight of the attachment itself and to release the pressure in the hydraulic circuit.

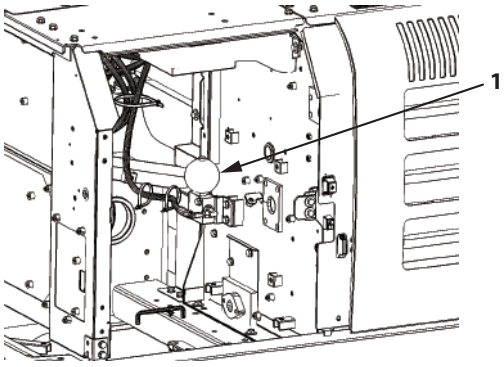

MDFY-05-003-1 ja

Guide to Releasing Pressure in the Hydraulic Circuit

1. Set the machine in the parking attitude.
2. Set the pilot shut-off lever to the LOCK position.

Go through procedure 3 to 5 immediatey after the engine is stopped. As the pressure in pilot accumulator (1) gradually decreases after the engine is stopped, lower the front equipment and attachment to the ground before the pressure decrease.

3. Stop the engine. Then, turn the key to the ON position.
4. Set the pilot shut-off lever to the UNLOCK position.
5. Move the control levers and attachment pedals forward and rearward or left and right to release pressure from the hydraulic circuit.
6. Set the pilot shut-off lever to the LOCK position and turn the key to the OFF position.

NOTE

Front equipment and attachment can be lowered in case of engine stop and emergency situation. Refer to "How to lower front equipment and attachment" page for the procedure.

How to Lower Boom in Case of Emergency and When Engine Stops (Without hose-rupture safety valve)

WARNING

Confirm that no one is under the front equipment and attachment before starting the procedure below. The front equipment and attachment will be lowered.

In case the engine suddenly stops and the engine cannot be restarted, lower the front equipment and attachment by operating the boom with the following procedure.

IMPORTANT

Never loosen screw (2) more than 2 turns. Screw (2) may come off.

1. Loosen lock nut (1) in the emergency valve on the right. Loosen screw (2) one half of a turn. The boom lowering speed can be partly adjusted by loosening screw (2) further.

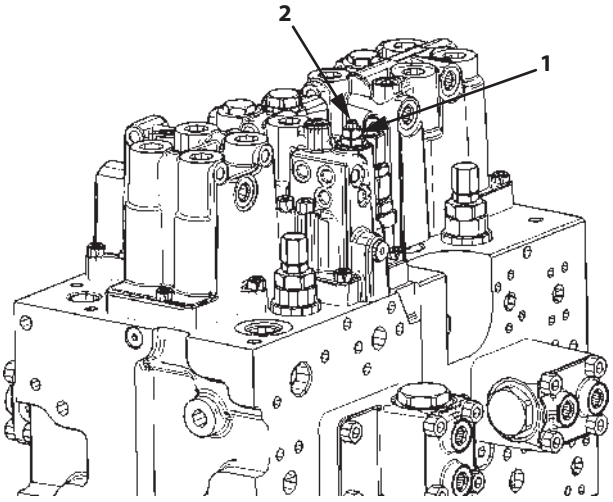

ZX120-7 class

MDFY-01-178-1 ja

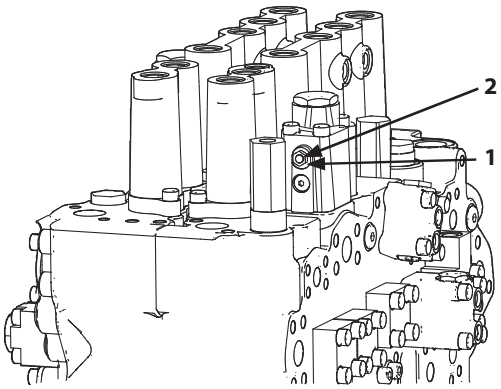

ZX160-7, 180-7, 200-7, 240-7, 300-7, 330-7 class

MDAA-05-003-2 ja

IMPORTANT

Excessive leakage may result if screw (2) and lock nut (1) are tightened insufficiently. Be sure to retighten screw (2) and lock nut (1) to specifications.

2. After the boom is lowered, tighten screw (2) and tighten lock nut (1) to the specifications below.

   Locknut (1)
   Tightening Torque: 13 N·m (1.3 kgf·m)
   Screw (2)
   Tightening Torque: 7 N·m (0.7 kgf·m)

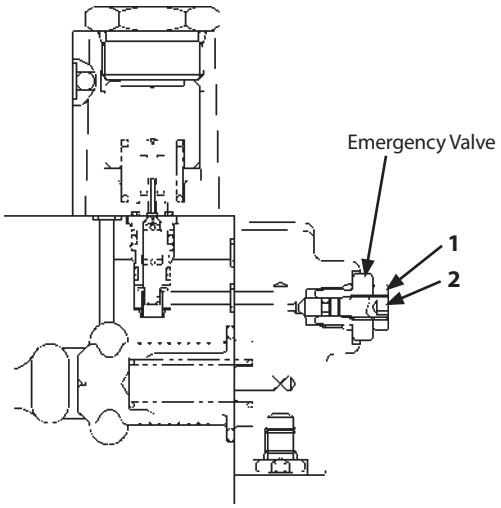

T1V1-03-03-038-1 en_GB

How to Lower Front Equipment and Attachment in Case of Emergency and When Engine Stops (With hose-rupture safety valve)

WARNING

Confirm that no one is under the front equipment and attachment before starting the procedure below. The front equipment and attachment will be lowered.

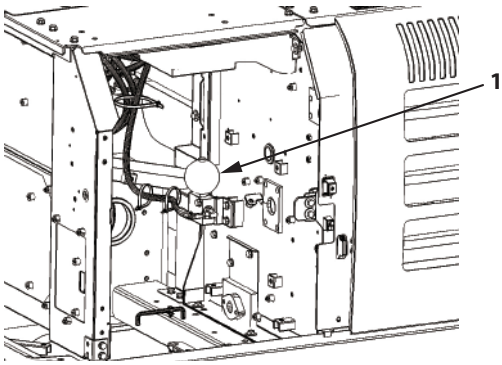

MDFY-05-003-1 ja

IMPORTANT

If the engine stops suddenly while the machine is running, consult your authorized dealer.

If the engine stops unexpectedly with the front attachment off the ground, it can be lowered to the ground as follows. However, if the front cannot be operated by following the steps below, stop trying to lower the front and wait for service personnel in a safe place.

Procedure

1. Turn key switch (2) ON.
2. Set the pilot shut-off lever to the UNLOCK position.
3. Operate the boom lowering lever and lower the front so it touches the ground.

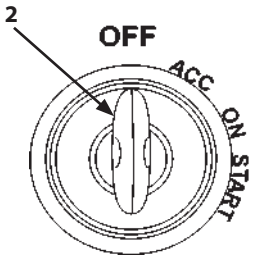

MDCD-01-030-3 ja

IMPORTANT

If the front stops partway down with the lever actuated, put the control lever in its neutral position at that point.

4. Set the pilot shut-off lever to the LOCK position and turn key switch (2) to the OFF position.

If the front cannot be positioned as desired after performing steps 1 to 4 above, perform the additional steps below.

5. Turn engine stop switch (3) ON.
6. Confirm that the pilot shut-off lever is in the LOCK position.
7. After turning key switch (2) ON, turn it to the START position and turn the starter over.

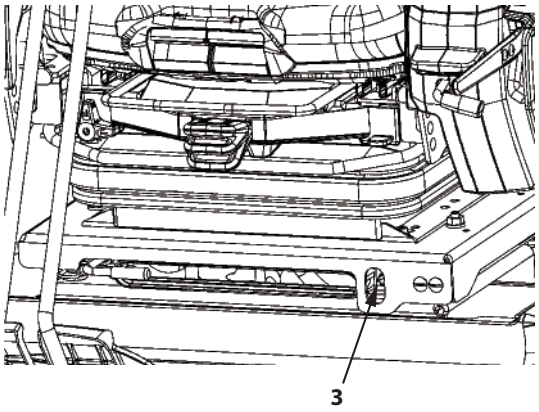

MDFY-01-024-4 ja

IMPORTANT

The engine may be damaged if the starter turns for too long a time. Never turn the starter over for longer than 20 seconds at a time.

8. Immediately after completing step 7, put engine stop switch (3) in its OFF position.
9. Set the pilot shut-off lever to the UNLOCK position.
10. Immediately after step 9, operate the boom lowering lever and lower the front so it touches the ground. If the front stops partway down with the lever actuated, put the control lever in its neutral position at that point.
11. Set the pilot shut-off lever to the LOCK position and turn key switch (2) to the OFF position.

If the front fails to come down at all after performing steps 5 to 11 above, and if repeating the steps appears unlikely to result in lowering the front to the ground, the operator should evacuate to a safe location and wait for service personnel without attempting further to lower the front.

Precautions for After Operations

- After finishing the day's work, drive the machine to firm, level ground where no possibility of falling stones, ground collapse, or floods are present. Park the machine according to the parking procedures.
  (Refer to “How to Park” in chapter 4, “DRIVING THE MACHINE”.)
- Fully refill the fuel tank.
- Clean the machine.

MEMO

Transporting by Road

When transporting the machine on public roads, be sure to first understand and follow all local regulations.

M1V1-06-001 ja

- When transporting the machine using a trailer, check the width, height, length and weight of the trailer with the machine loaded. Note that transporting weight and dimensions may vary depending on the type of shoe or front attachments installed.
- Investigate conditions on the route to be traveled in advance, such as dimensional limits, weight limits, and traffic regulations.

In some cases it may be necessary to obtain permission from the local authority concerned, or to disassemble the machine to bring it within local regulation for dimensional or weight limits.

Consult your authorized dealer prior to disassembly for transport.

Loading/Unloading on a Trailer

Always load and unload the machine on a firm, level surface.

WARNING

Be sure to use a loading dock or a ramp for loading/unloading. Never use the front attachment functions when loading or unloading the machine.

Ramp/Loading Dock

1. Before loading, thoroughly clean the ramps, loading dock and trailer flatbed. Dirty ramps, loading docks, and trailers with oil, mud, or ice on them are slippery and dangerous.
2. To prevent movement of trailer, place blocks against the trailer wheels to secure.
3. Ramps must be sufficient in width, length, and strength. Be sure that the incline of the ramp is less than 15°.
4. Loading docks must be sufficient in width and strength to support the machine and have an incline of less than 15°.
5. When loading a machine equipped with a pad crawler or rubber pad shoes, take extra care not to allow the machine to slip since the surface of the rubber pad shoe is flat.
   Only load the machine after removing any soil or clay adhered to the machine.
6. When transporting a machine equipped with a blade, take care not to hit the blade.

Loading/Unloading

WARNING

- **Always turn the auto-idle switch OFF when loading or unloading the machine. In auto-idle mode, speed may automatically increase.**
- **Always select slow speed mode with the travel mode switch.**
- **Never steer while driving up or down a ramp, it is extremely dangerous and may cause the machine to turnover. NEVER attempt to change direction when positioned on the ramp. If repositioning is necessary, first move back to the ground or flatbed, change the direction of travel, and begin to drive again.**
- **At the point where the ramp meets the level surface there is a sudden change of angle. Take care when traveling over this point, as balance may be lost.**
- **Extreme care must be taken when swinging the upper structure when the machine is on the trailer flatbed. If the front attachment is fitted, swing slowly with the arm fully rolled-in underneath the boom, being careful not to lose the balance of the machine.**

Loading

CAUTION

In cold weather, be sure to warm up the machine before loading or unloading it.

If the front attachment is fitted, load with the front attachment faced towards the front, if the front attachment is not fitted, reverse onto the trailer.

1. Load the machine so that the centerline of the machine aligns with the centerline of the trailer flatbed.
2. Drive the machine onto the ramp slowly.

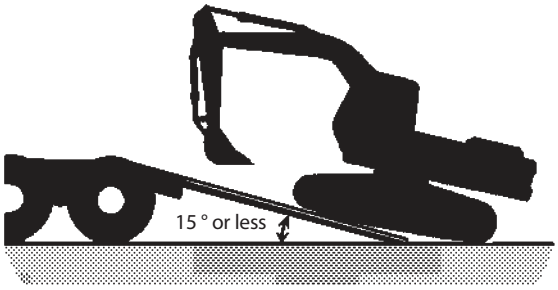

M1G6-06-002-1 en_GB

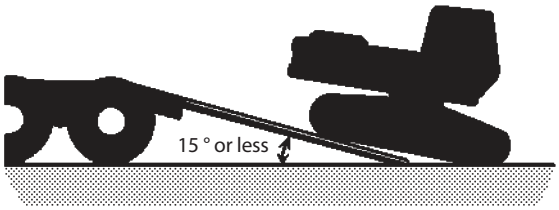

M107-06-018-1 en_GB

3. When the front attachment is fitted
   a. Determine a position for the bucket in line with the trailer. Adjust the angle of the boom and the arm at 90 to 110 °.
   b. Lower the bucket onto to the deck of the trailer before the machine passes over the end of the ramp for support.
   c. Lift the bucket slightly off the deck of the trailer after the machine has moved to the designated space. With the arm lifted inwards, slowly swing the upper structure place around 180 °.
   d. Rest the front attachment on supports such as wooden blocks placed on the trailer flatbed. Also lower the blade onto the deck at this time (if fitted).

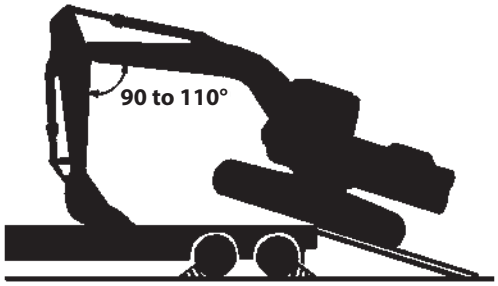

M107-06-012-3 en_GB

M107-06-013 ja

4. Stop the engine. Remove the key from the key switch.
5. Set the pilot shut-off lever to the LOCK position.
6. Close cab windows, roof vent and door, and cover the exhaust opening, to prevent entry of wind and water. Place a cover over the exhaust outlet. Lock all doors, covers and caps if they have a lock.
7. Store all mirrors and the radio antenna correctly.

Fastening the Machine for Transport

WARNING

Fasten the machine frame to the deck securely with chains and cables. While traveling, loads may shake around, and move forward or backward and to the sides.

1. Place cog stoppers or blocks in front of and behind the tracks to help secure the machine.
2. Fasten each corner of the machine and front attachment to the trailer with chains or cables of the appropriate strength.

M1V1-06-001 ja

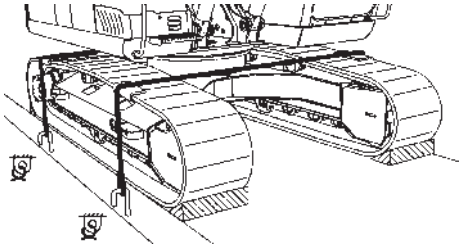

MDCD-06-001 ja

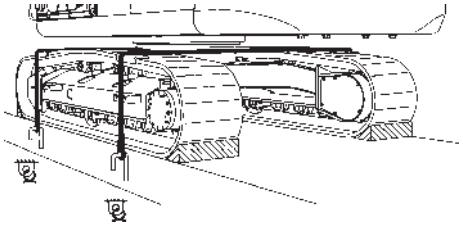

When not using the fastening holes

MDCD-06-002 ja

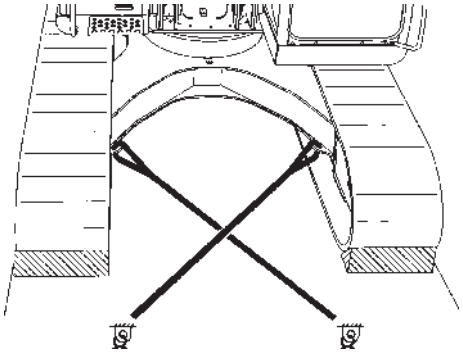

MDCD-06-003 ja

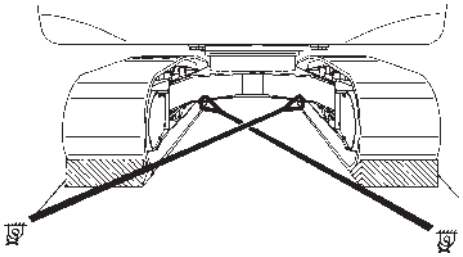

When using the the fastening holes

MDCD-06-004 ja

Unloading

WARNING

At the point where the ramp meets the level surface there is a sudden change of angle. Be careful to keep the machine balanced.

IMPORTANT

When unloading the machine, Make sure that the angle of the boom and the arm is kept at 90 to 110°.
Damage to the machine is possible if the arm is kept in a suspended state during unloading.

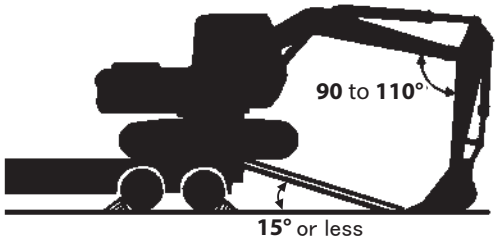

M107-06-014-2 en_GB

1. When moving from the edge of the trailer onto the ramp, travel extremely slowly with the angle of the arm and the boom kept at 90 to 110° and the bucket on the ground.

   ### IMPORTANT

   When driving the machine over the ramp, do not allow the bucket to strike the ground. Damage to the hydraulic cylinders may result.

2. Keep the bucket in contact with the ground until the machine has fully mounted the ramp.
3. As the machine moves off the ramp, proceed slowly, gradually raising the boom and extending the arm until the machine is completely clear of the ramp.

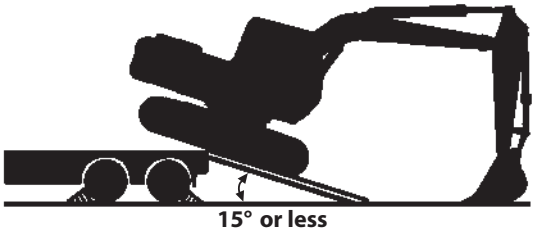

M107-06-015-1 en_GB

Lifting the Machine

WARNING

- **Use lifting cables and other lifting equipment that are sufficiently strong and free from any damage and/or other defects.**
- **Contact your authorized dealer for correct lifting procedures, and the size and types of lifting cable and tools.**
- **Before performing the lifting operation, set the pilot shut-off lever to the LOCK position so that the machine does not move accidentally.**
- **Incorrect lifting procedure and/or incorrect wire rope attachment will cause the machine to move (shift) while being lifted, potentially resulting in damage to the machine and/or personal injury.**
- **Never apply sudden loads to the lifting cable or fixtures.**
- **Do not allow anyone to approach, or go underneath the lifted machine.**
- **The indicated center of gravity is for a machine with standard specifications. The center of gravity will vary depending on the kinds of attachments and/or optional equipment installed and their positioning. Take care not to unbalance the machine while lifting.**

Lifting

1. Fully extend the arm and bucket cylinders. Lower the boom until the bucket comes in contact with the ground.
2. Set the pilot shut-off lever to the LOCK position.
3. Stop the engine. Remove the key from the key switch.
4. Close and lock all doors and covers.
5. Use wire ropes and support bar of sufficient length so that they do not come in contact with the machine while lifting.
   Wrap some protectors around wire ropes and/or support bar as required to prevent the machine from being damaged.
6. Set a crane in an appropriate position.
7. Thread the wire rope through and under both sides of the track frames as illustrated. Attach the wire ropes to the crane.

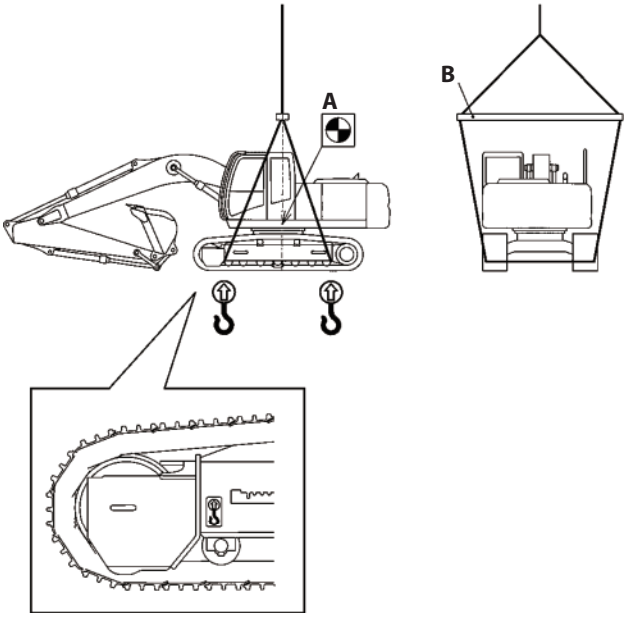

MDCD-06-005-1 ja

A: Center of Gravity
B: Support Bar

MEMO

Correct Maintenance and Inspection Procedures

Learn how to service your machine correctly. Follow the correct maintenance and inspection procedures shown in this manual.

SA-005 ja

Inspect machine daily before starting.

- Check controls and instruments.
- Level, leakage and contamination of coolant, fuel, DEF and hydraulic oil
- Check for leaks, kinked, frayed or damaged hoses and lines.
- Walk around machine checking general appearance, noise, heat, etc.
- Check for loose or missing parts.

  If there is any problem with your machine, repair it before operating or contact your authorized dealer.

IMPORTANT

- **Use only specified fuel, DEF, lubricants and coolant.**
- **Be sure to use only genuine Hitachi parts. Failure to do so may result in serious injury or death and/or machine breakdown.**
- **Failure to use recommended fuel, lubricants, and genuine Hitachi parts will result in loss of Hitachi product warranty.**
- **Never adjust engine governor or hydraulic system relief valve.**
- **Protect electrical parts from water and steam.**
- **Never disassemble electrical components such as main controller, sensors, etc.**
- **Never adjust parts of engine fuel system or hydraulic equipment.**
- **Using bad quality fuel, drainage agent, fuel additives, gasoline, kerosene or alcohol refueled or mixed with specified fuel may deteriorate performance of fuel filters and cause sliding problem at lubricated contacts in the injector. It also affects the engine and aftertreatment device parts, leading to malfunction.**
- **Using bad quality DEF may deteriorate performance of the engine and affect the aftertreatment device, leading to malfunction. Using improper density DEF may derate the engine power.**
- **Use Hitachi genuine high performance filter.**

- Body Information Controller
  This machine provides a body information controller that stores machine operation information for preventive maintenance.
  When maintaining the machine, our authorized service man may down load the stored information.
  Consult with your authorized dealer for detailed function of this device.
- Communication Terminal Operation
  It is not necessary to check or operate the communication terminal however if any abnormality is found, consult your authorized dealer.
  Before installing any covering attachment such as a head guard, consult your authorized dealer.
  Never spray water on the communication terminal and the wirings.
- Inquire to your local environmental or recycling center or your authorized dealer, for the proper way to recycle or dispose of oil, fuel, coolant, filters, batteries, DEF and other waste.

Layout

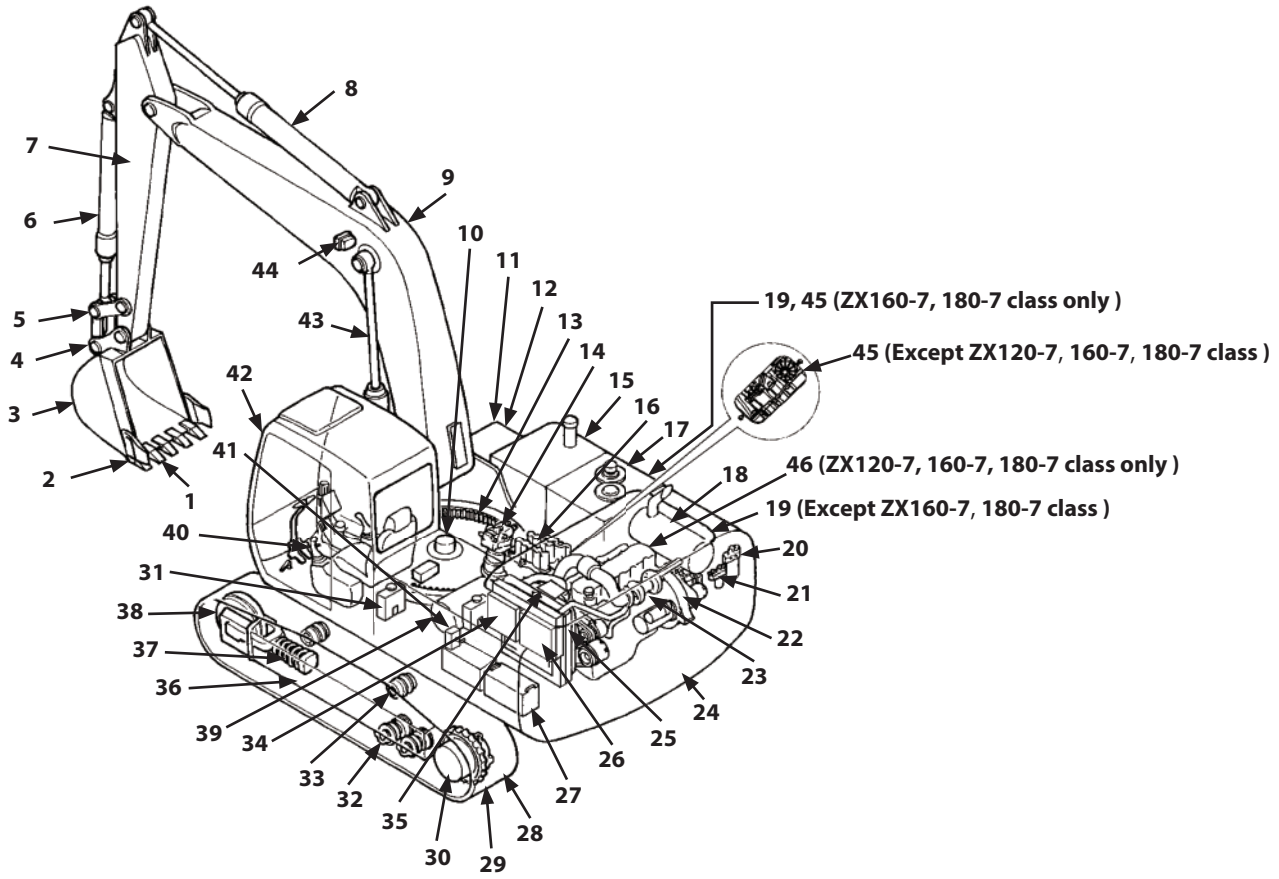

MDFY-07-165-1 en_GB

1- Tooth
2- Side Cutter
3- Bucket
4- Link A
5- Link B
6- Bucket Cylinder
7- Arm
8- Arm Cylinder
9- Boom
10- Center Joint
11- Tool Box
12- DEF Tank (Except ZX120-7 class)
13- Swing Bearing
14- Swing Device
15- Fuel Tank
16- Control Valve
17- Hydraulic Oil Tank
18- Aftertreatment Device
19- Fuel Filter
20- Engine Oil Filter
21- Pilot Filter
22- Pump
23- Engine
24- Counterweight
25- Radiator, Oil Cooler, Intercooler
26- Air Conditioner Condenser
27- Battery
28- Track Link
29- Shoe
30- Travel Device
31- Washer Tank
32- Lower Roller
33- Upper Roller
34- Fuel Cooler
35- Expansion Tank
36- Track Frame
37- Track Adjuster
38- Front Idler
39- Air Cleaner
40- Control Lever
41- Battery Disconnect Switch
42- Cab
43- Boom Cylinder
44- Work Light
45- DEF Supply Module (Except ZX120-7 class)
46- Oil Separator (ZX120-7, 160-7, 180-7 class only)

Inspection and Maintenance Intervals

Refer to Maintenance Guide for information about lubricants, inspection and adjustment intervals. The maintenance guide table is affixed in the utility space. Refer to the next page.

This manual recommends grouping the intervals into three categories as follows:

Daily checks :To be conducted daily before operation
Monthly checks :To be conducted regularly, once per month
Annual checks :To be conducted regularly, once per year

Inspection and maintenance intervals shown in this manual are those for machines operated under normal conditions. If the machine is operated under more severe conditions, shorten the intervals.

Maintenance Guide Table

The maintenance guide table is affixed in the utility space. Lubricate and/or service the parts at the intervals as instructed in the table so that all necessary maintenance can be performed regularly.

- Symbol Marks
  The following marks are used in the maintenance guide table.

	Grease (Front Joint Pin, Swing Bearing, Swing Internal Gear)		Hydraulic oil filter (Pilot Filter, Full-Flow Filter, Suction Filter)
	Gear Oil (Pump Transmission, Travel Reduction Gear, Swing Reduction Gear)		Air Cleaner Element
	Engine Oil		Coolant(Long-Life Coolant)
	Engine Oil Filter		Fuel Filter (Fuel Main Filter, Pre-Filter)
	Hydraulic Oil		DEF Filter(Supply Module Main Filter, Tank Water Supply Inlet Filter)
	Oil Separator Elemet		

- Maintenance Guide Table
  ZX120-7 class

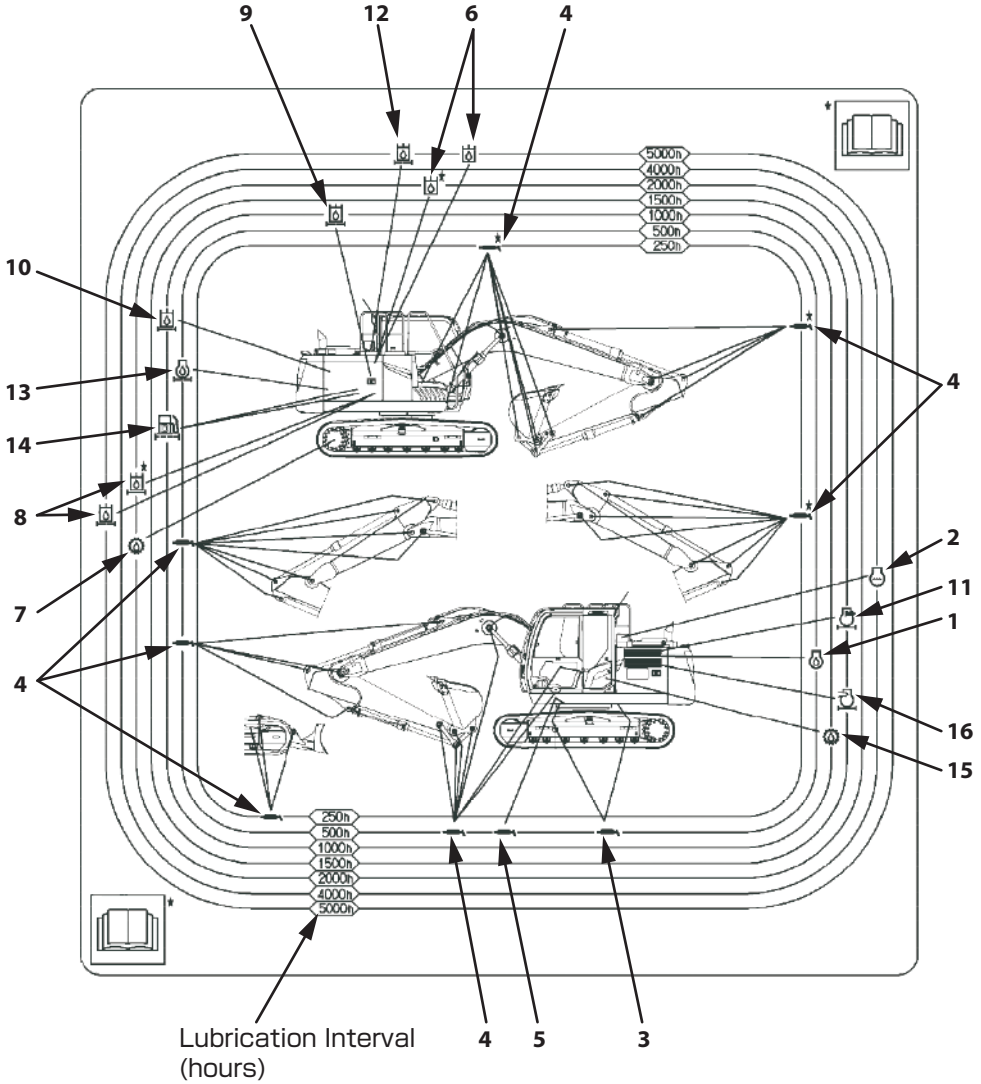

MDFY-07-154-1 en_GB

	Item	Page		Item	Page
1	Engine Oil	7-52	9	Hydraulic Oil Filter (Full-Flow)	7-78
2	Coolant (Long-Life Coolant)	7-114	10	Hydraulic Oil Filter (Pilot)	7-79
3	Grease	7-47	11	Oil Separator Element	7-60
4	Grease (Every 500 hours. Only first time at 250 hours)	7-43	12	Hydraulic Oil Filter (Air Breather)	7-81
5	Grease	7-48	13	Engine Oil Filter	7-52
6	Hydraulic Oil	7-72	14	Fuel Filter (Main/Pre)	7-96
7	Gear Oil (Travel Reduction Gear)	7-67	15	Gear Oil (Swing Reduction Gear)	7-65
8	Hydraulic Oil Filter (Suction)	7-77	16	Air Cleaner Element	7-103

- ZX160-7, 180-7 class

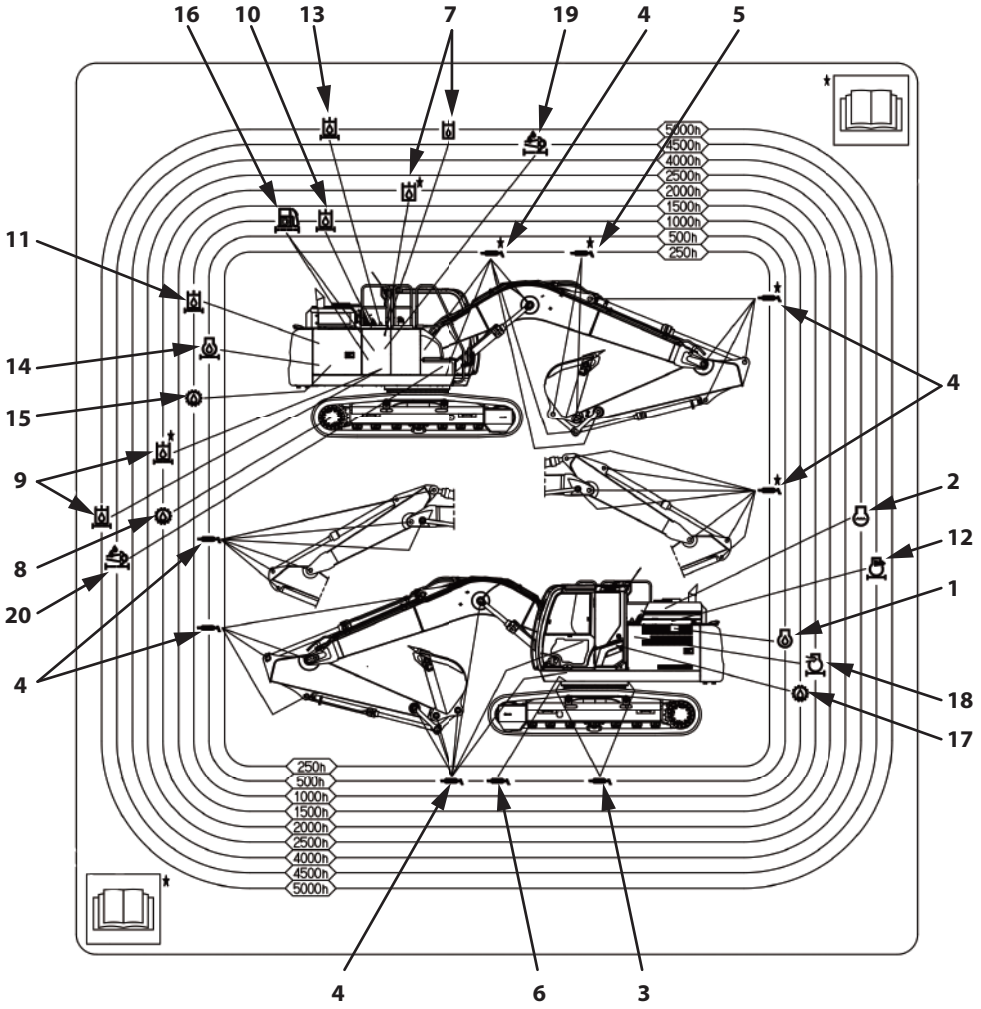

MDFY-07-140-1 ja

	Item	Page		Item	Page
1	Engine Oil	7-52	11	Hydraulic Oil Filter (Pilot)	7-79
2	Coolant (Long-Life Coolant)	7-114	12	Oil Separator Element	7-60
3	Grease	7-47	13	Hydraulic Oil Filter (Air Breather)	7-81
4	Grease (Every 500 hours. Only first time at 250 hours)	7-43	14	Engine Oil Filter	7-52
5	Grease (first time at 250 hours, and second and subsequent times at 500 hours for genuine Hitachi bucket and every 250 hours for others)	7-43	15	Gear Oil (Pump Transmission)	7-63
6	Grease	7-48	16	Fuel Filter (Main/Pre)	7-96
7	Hydraulic Oil	7-72	17	Gear Oil (Swing Reduction Gear)	7-65
8	Gear Oil (Travel Reduction Gear)	7-67	18	Air Cleaner Element	7-103
9	Hydraulic Oil Filter (Suction)	7-77	19	DEF Supply Module Main Filter	7-219
10	Hydraulic Oil Filter (Full-Flow)	7-78	20	DEF tank water supply inlet filter	7-221

- ZX200-7, 240-7, 300-7, 330-7 class

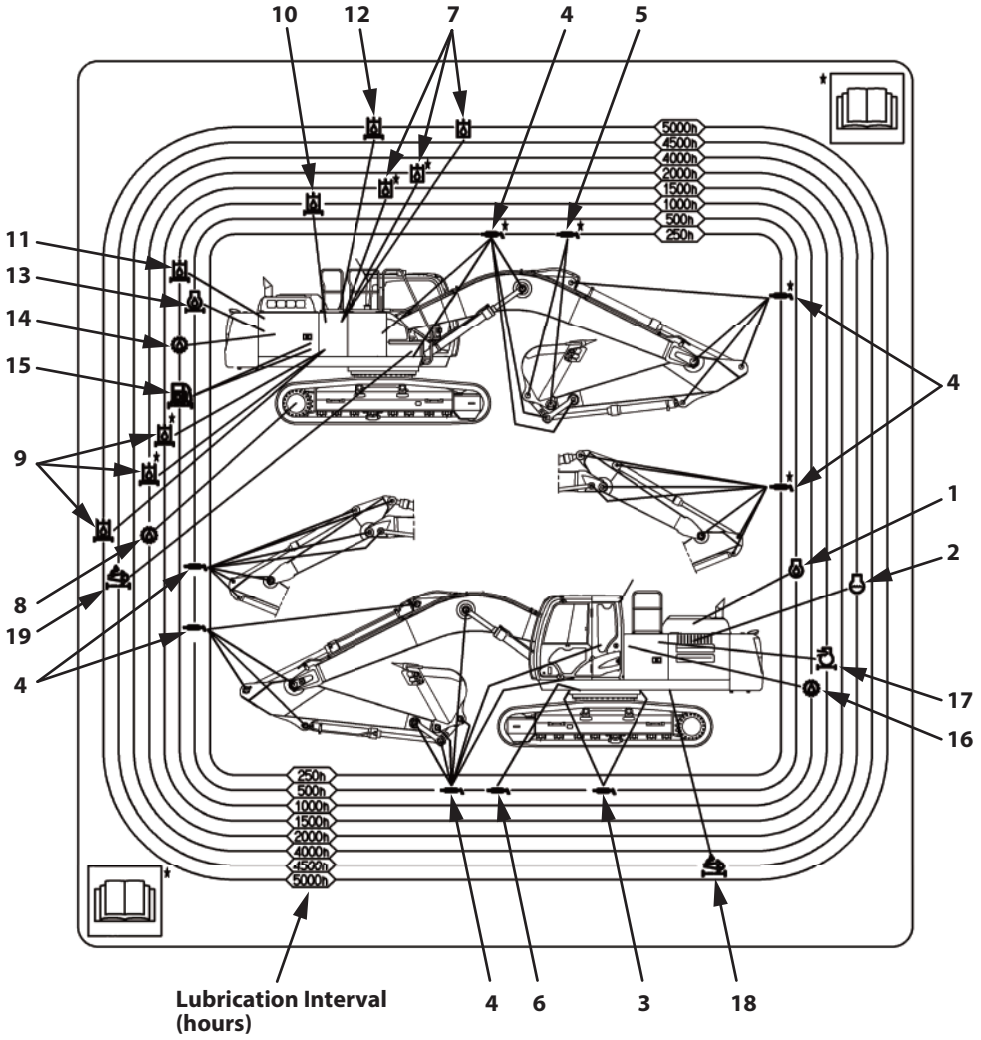

MDFY-07-099-1 en_GB

	Item	Page		Item	Page
1	Engine Oil	7-52	11	Hydraulic Oil Filter (Pilot)	7-79
2	Coolant (Long-Life Coolant)	7-114	12	Hydraulic Oil Filter (Air Breather)	7-81
3	Grease	7-47	13	Engine Oil Filter	7-52
4	Grease (Every 500 hours. Only first time at 250 hours)	7-43	14	Gear Oil (Pump Transmission)	7-63
5	Grease (first time at 250 hours, and second and subsequent times at 500 hours for genuine Hitachi bucket, or at 250 hours for non-genuine bucket).	7-43	15	Fuel Filter (Main/Pre)	7-96
6	Grease	7-48	16	Gear Oil (Swing Reduction Gear)	7-65
7	Hydraulic Oil	7-72	17	Air Cleaner Element	7-103
8	Gear Oil (Travel Reduction Gear)	7-67	18	DEF Supply Module Main Filter	7-219
9	Hydraulic Oil Filter (Suction)	7-77	19	DEF tank water supply inlet filter	7-221
10	Hydraulic Oil Filter (Full-Flow)	7-78			

Preparation for Inspection and Maintenance

Except in special cases, park the machine as indicated below before servicing the machine.

1. Park the machine on a firm, level surface.
2. Lower work equipment such as the bucket and blade (optional) to the ground.
3. Turn the auto-idle switch OFF.
4. Turn the engine control dial to the slow idle position and run the engine for 5 minutes to cool it.
5. Turn the key switch OFF to stop the engine. Remove the key. Put pilot shut-off lever (1) in the LOCK position.
6. Put a sign (2) saying "Being Serviced" in a conspicuous place, such as the door or a control lever, before starting work.

M104-07-021 ja

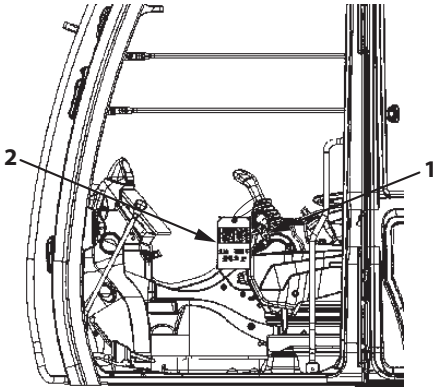

MDFY-07-060-1 ja

WARNING

To prevent accidents, never attempt to perform maintenance on the machine when the engine is running. If maintenance work with the engine running is unavoidable, strictly comply with the following items.

- **One person should take the operator's station and be ready to stop the engine at any time, while communicating with other workers.**
- **When working around moving parts is unavoidable, pay special attention to ensure that hands, feet, and clothing do not become entangled.**
- **If parts or tools are dropped or inserted into the fan or the belt, they may fly off or be cut off. Do not drop or insert parts or tools into moving parts.**
- **Move pilot control shut-off lever (1) to the LOCK position so the machine will not move.**
- **Never touch the control levers and pedals. If operating the control levers or pedals is unavoidable, signal co-workers to evacuate to a safe place.**

SA-2294 ja

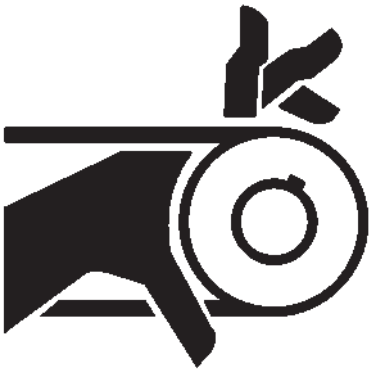

SA-026 ja

Hood and Access Covers

ZX120-7 class

WARNING

- **Do not keep the hood and access covers open when the machine is parked on a slope, or while the wind is blowing hard. The hood or access covers may close accidentally, possibly resulting in personal injury.**
- **When opening or closing the hood and access covers, take extra care not to trap fingers between the base machine and the hood or access covers.**

- Holding the handle on the access cover, raise the cover until the cover is secured with catch (1).
- After opening the right and/or left access cover, be sure to insert rod (3) into cover lock hole (4) to hold the cover.

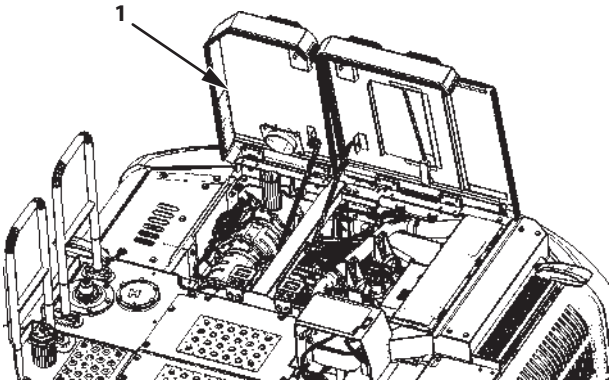

Engine Cover

MDFY-07-113-1 ja

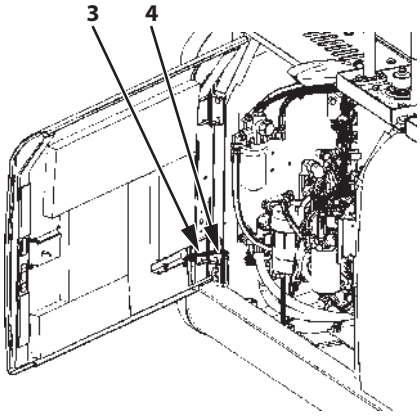

Right Cover

MDFY-07-114-1 ja

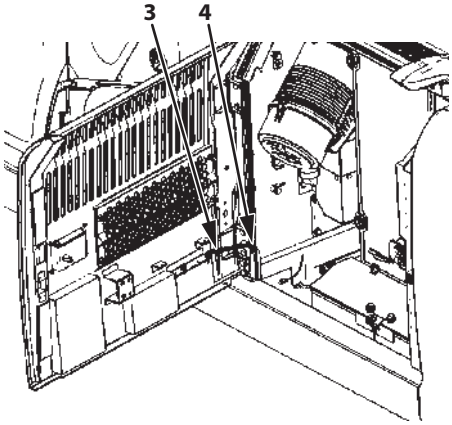

Left Cover

MDFY-07-115-1 ja

ZX160-7, 180-7 class

WARNING

- **Do not keep the hood and access covers open when the machine is parked on a slope, or while the wind is blowing hard. The hood or access covers may close accidentally, possibly resulting in personal injury.**
- **When opening or closing the hood and access covers, take extra care not to trap fingers between the base machine and the hood or access covers.**

- Holding the handle on the access cover, raise the cover until the cover is secured with catch (1).

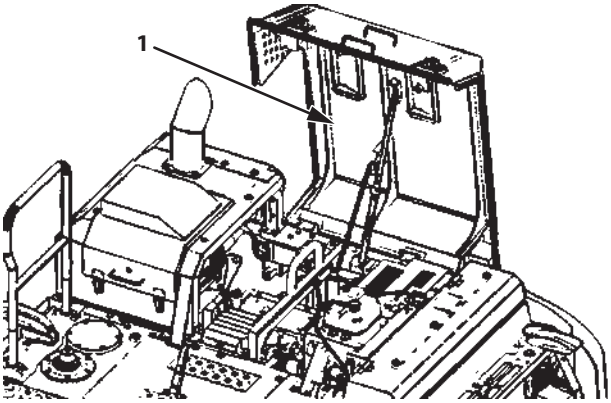

Engine Cover

MDFY-01-129-1 ja

- After opening the right and/or left access cover, be sure to insert rod (3) into cover lock hole (4) to hold the cover.
- When opening the front right cover, first open the rear right cover. Then, grip door catch (5) as shown in the illustration on the right and pull towards you.

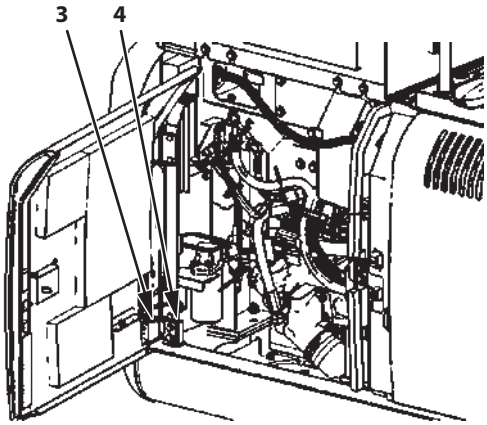

Rear Right Cover

MDFY-01-130-1 ja

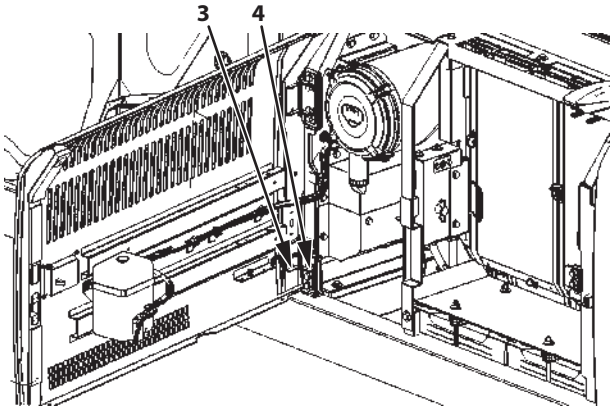

Left Cover

MDFY-01-132-1 ja

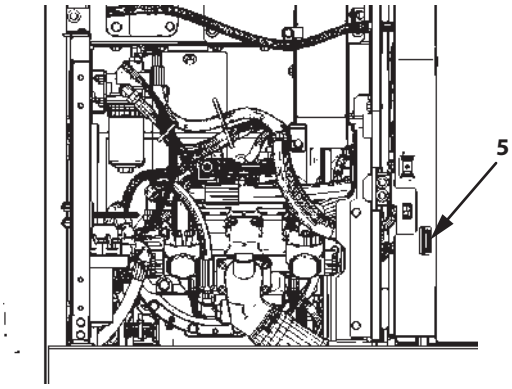

Front Right Cover

MDFY-01-131-1 ja

ZX200-7, 240-7 class

WARNING

- **Do not keep the hood and access covers open when the machine is parked on a slope, or while the wind is blowing hard. The hood or access covers may close accidentally, possibly resulting in personal injury.**
- **When opening or closing the hood and access covers, take extra care not to trap fingers between the base machine and the hood or access covers.**

- Holding the handle on the access cover, raise the cover until the cover is secured with catch (1).
- After opening the right and/or left access cover, be sure to insert rod (3) into cover lock hole (4) to hold the cover.
- When opening the front right cover, first open the rear right cover. Then, grip door catch (5) as shown in the illustration on the right and pull towards you.
- When opening the rear left cover, first open the front left cover. Then, grip door catch (6) and pull towards you.

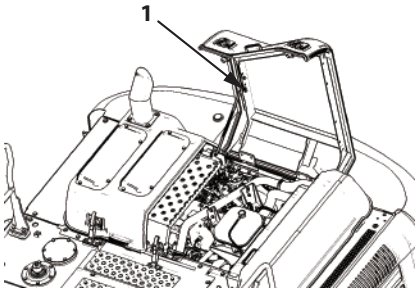

Engine Cover

MDFY-07-002-1 ja

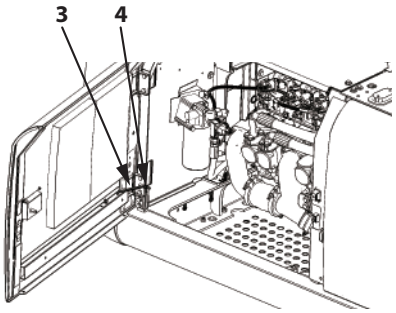

Rear Right Cover

MDFY-07-003-1 ja

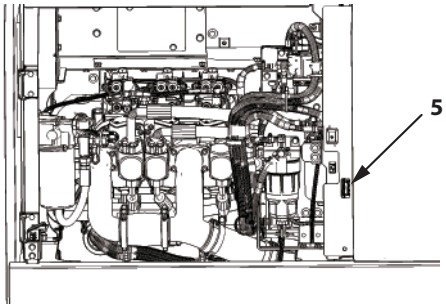

Front Right Cover

MDFY-07-005-1 ja

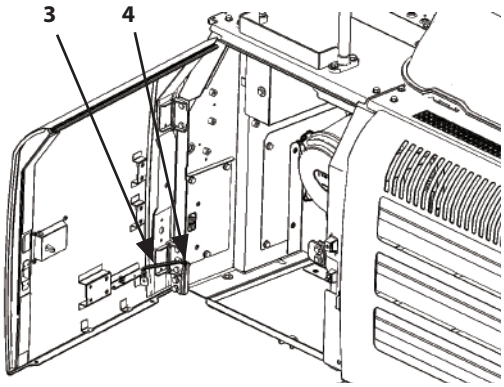

Front Left Cover

MDFY-07-004-1 ja

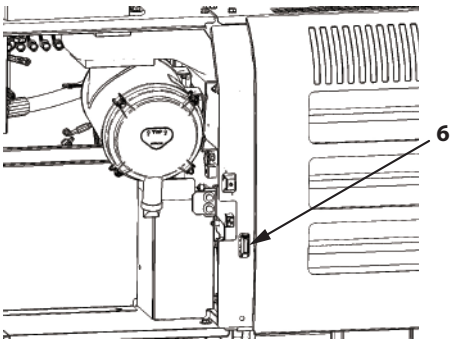

Rear Left Cover

MDFY-07-006-1 ja

ZX300-7, 330-7 class

WARNING

- **Do not keep the hood and access covers open when the machine is parked on a slope, or while the wind is blowing hard. The hood or access covers may close accidentally, possibly resulting in personal injury.**
- **When opening or closing the hood and access covers, take extra care not to trap fingers between the base machine and the hood or access covers.**

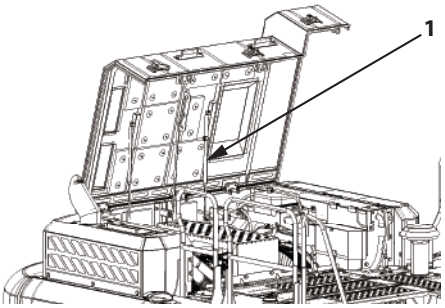

Engine Cover

MDFY-07-083-1 ja

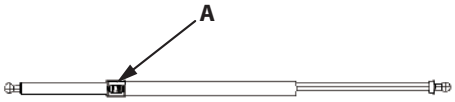

Gas Damper

MDFY-07-096-1 ja

- To open the engine cover, hold the handle on the cover and open.
  After opening the cover, always squeeze lock mechanism (A) of gas damper (1) to secure the cover.
- After opening the right and/or left access cover, be sure to insert rod (2) into cover lock hole (3) to hold the cover.
- When opening the front right cover, first open the rear right cover. Then, grip door catch (5) as shown in the illustration on the right and pull towards you.
- When opening the rear left cover, first open the front left cover. Then, grip door catch (6) and pull towards you.

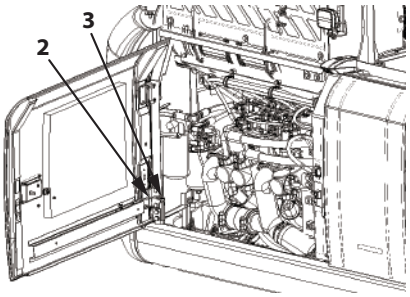

Rear Right Cover

MDFY-07-084-1 ja

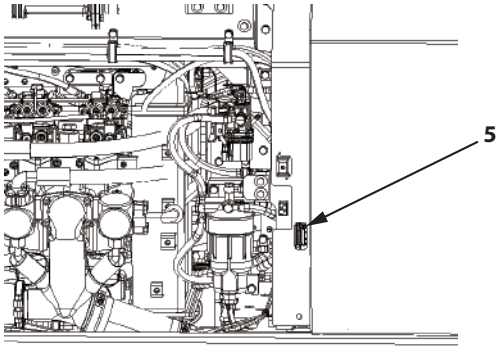

Front Right Cover

MDFY-07-085-1 ja

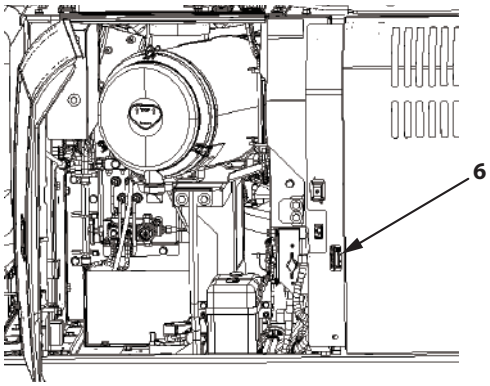

Rear Left Cover

MDFY-07-086-1 ja

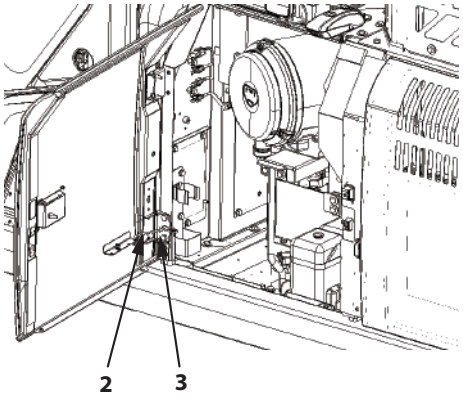

Front Left Cover

MDFY-07-087-1 ja

Maintenance Guide

A. Greasing

Parts			Qty.	Interval (Hours)							Page
				8	50	100	250	500	1000	2000	
1.	Front joint pins	Bucket and link pins	7	★			★★				7-43
		Front joint pins other than bucket & links	11	★			★★				7-45
2.	Swing Bearing		2								7-47
3.	Swing Internal Gear		1					★★★			7-48

★ : Add grease daily during first 50 hours of operation.
If excavation is performed in water, grease the pin after operation is complete.
Shorten greasing intervals when the machine is operated under severe conditions or when the machine is continuously operated for a long period of time.

★★ : 250 hours the first time only.

★★★ : Check and add grease if necessary.

IMPORTANT

- **Grease bucket and link pivots every day until break-in operation (50 hours) is complete.**
- **When a bucket which does not have a clearance adjustment mechanism, such as slope-finishing bucket or V-type bucket is used, grease the two pins every 250 hours. The same applies when a genuine Hitachi hoe bucket preceding the EX-5 model is used, and when an attachment that is not a genuine Hitachi bucket and has a boss part that has not been treated with WC spray is used.**

B. Engine

Parts to Lubricate				Qty.	Interval (Hours)							Page
					8	50	100	500	1500	4500	6000	
1.	Engine Oil	Check Oil Level		1	■							7-50
2.	Engine Oil	Replace	ZX120-7 class	19.1 L				■				7-52
			ZX160-7, 180-7 class	22 L				■				
			ZX200-7 class	23 L				■				
			ZX240-7 class	29 L				■				
			ZX300-7, 330-7 class	48 L				■				
3.	Engine Oil Filter	Replace		1				■				7-52
4.	Check and Clean around the Engine			–	As required							7-57
5.	Check the Blowby Hose			–	As required							7-58
6.	Oil Separator Element	Replace	ZX120-7 class	1					■			7-60
			ZX160-7, 180-7 class	1						■		
7.	Timing Belt (Only ZX120-7 class)	Replace		1							■	7-62
8.	Timing Belt Cover (Only ZX120-7 class)	Inspect		1							■	7-62
		Replace		1	If the timing belt cover has engine oil spilled on it:							

C. Transmission

Parts				Qty.	Interval (Hours)							Page
					8	50	100	250	500	1000	2000	
1.	Pump Transmission	Check Oil Level		1				■				7-63
		Re-place	ZX160-7, 180-7 class	1.0 L						■		7-64
			ZX200-7, 240-7, 300-7, 330-7 class	1.9 L								
		Clean Air Breather		1						■		7-64
2.	Swing Reduction Gear	Check Oil Level		1					■			7-65
		Re-place	ZX120-7 class	3.2 L						■		7-66
			ZX160-7, 180-7, 200-7 class	6.9 L								
			ZX240-7 class	9.3 L								
			ZX300-7 class	12.0 L								
			ZX330-7 class	15.7 L								
3.	Travel Device	Check Oil Level		2					■			7-67
		Re-place	ZX120-7 class	4.2 L×2							■	7-68
			ZX160-7, 180-7, 200-7 class	6.8 L×2								
			ZX240-7 class	7.8 L×2								
			ZX300-7 class	9.4 L×2								
			ZX330-7 class	11.0 L×2								

D. Hydraulic System

Parts			Qty.	Interval (Hours)										Page
				8	50	100	250	500	1000	1500	2000	2500	5000	
1.	Check hydraulic oil level		1	■										7-71
2.	Change hydraulic oil **Hydraulic oil capacity (amount at oil change)	ZX120-7 class	198 L (82 L)								■		■	7-72
		ZX160-7, 180-7 class	210 L (125 L)											
		ZX210LC-7	240 L (135 L)											
		ZX210LCN-7, 240N-7	220 L (122 L)								★		★	
		ZX240-7 class	294 L (156 L)											
		ZX300-7 class	294 L (163 L)											
		ZX330-7 class	340 L (198 L)											
3.	Clean suction filter		1	Every time hydraulic oil is changed										7-77
4.	Replace full-flow filter		1						★					7-78
5.	Replace pilot oil filter		1						■					7-79
6.	Replace air breather element		1										■	7-81
7.	Check hoses and lines	for leaks, looseness		■										7-82
		for cracks, bend, etc.	–				■							7-82

★ : The change/replacement interval will differ according to the brand of hydraulic oil used, kind of filter element, average attachment operating availability. Refer to "Change/replacement Interval of Hydraulic Oil and Full Flow Filter Element"(7-70). See recommended oil chart.

** : Hydraulic oil capacity indicates the entire amount of oil, including oil in the hydraulic oil tank, devices and lines. Amount at oil change means the amount of oil that is changed during inspection and maintenance.

E. Fuel System

Parts		Qty.	Interval (Hours)							Page
			8	50	100	250	500	1000	2000	
1.	Drain Fuel Tank Sump	1	■							7-90
2.	Drain Fuel Pre-Filter	1	■							7-91
3.	Replace Main Fuel Filter Element	1						■		7-96
4.	Replace Fuel Pre-Filter Element	1						■		7-99
5.	Check Fuel Hoses for leaks, cracks	–	■							7-102
	Check Fuel Hoses for cracks, bend, etc.	–				■				7-102

F. Air Cleaner

Parts			Qty.	Interval (Hours)							Page
				8	50	100	250	500	1000	2000	
1.	Air Cleaner Element (outer)	Clean	1	(or when indicator lit)			■				7-103
		Replace	1	After cleaning 6 times or 1 year							7-103
2.	Air Cleaner Element (inner)	Replace	1	When outer element is replaced							7-106

G. Cooling System

	Parts			Qty.	Interval (Hours)							Page
					8	50	100	250	500	1000	2000	
1.	Coolant Level			1								7-109
2.	Check V-belt (Only ZX120-7, 160-7, 180-7 class)			1								7-111
3.	Check and Adjust V-Belt Tension (Except ZX120-7, 160-7, 180-7 class)			1		★★						7-112
4.	Change Coolant	ZX120-7 class		19 L	Twice a year*							7-114
		ZX160-7, 180-7 class		23 L								
		ZX200-7, 240-7 class		31 L								
		ZX300-7 class		48 L								
		ZX330-7 class		48 L								
5.	Clean Radiator, Oil Cooler and Intercooler Core		Out-side	1					★			7-117
			Inside	1	Once a year							7-117
6.	Clean Oil Cooler, Radiator and Intercooler Front Screen			1					★			7-121
7.	Clean Air Conditioner Condenser			1					★			7-121
8.	Clean fuel oil cooler			1					★			7-121

★ : Shorten the maintenance interval when the machine is operated in dusty areas.

★★ : 1st time only.

* : When Hitachi Genuine Long-Life Coolant (LLC) is used, change every two years or 4000 operating hours, whichever comes first.

IMPORTANT

- **Use soft water as a coolant. Do not use strong acid or alkaline water. Use a coolant mixed with genuine Hitachi Genuine Long-Life Coolant (LLC) at 30 to 50%. If a coolant containing less than 30% of Hitachi Genuine Long-Life Coolant (LCC) is used, the service life of the cooling parts may be shortened due to damage by freezing or corrosion of coolant system parts.**
- **If mineral-rich water is used for coolant, water stains or scale may build up inside the engine or radiator, causing overheating due to deterioration of coolant performance.**

H. Electrical System

Parts			Qty.	Interval (Hours)							Page
				8	50	100	250	500	1000	2000	
1.	Battery	Check Electrolyte Level	2	Monthly							7-127
		Check electrolyte specific gravity	2	Monthly							7-129
2.	Replace Fuses	Replace	–	As required							7-131

I. Miscellaneous

	Parts			Qty.	Interval (Hours)								Page
					8	50	100	250	500	1000	2000	4500	
1.	Check and Replace Bucket Teeth			–									7-139
2.	Change Bucket			–	As required								7-145
3.	Convert Bucket Connection Into Face Shovel			–	As required								7-147
4.	Adjust Bucket Linkage			1	As required								7-149
5.	Remove Travel Levers			2	As required								7-150
6.	Check and Replace Seat Belt			1		Every 3 years							7-151
7.	Clean Cell Phone (Smartphone) Holder			–	As required								7-152
8.	Clean Drink Holder			–	As required								7-153
9.	Clean Storage Pocket			–	As required								7-154
10.	Wide View Wiper (Parallel Link Wiper) Maintenance			1	As required								7-155
11.	Clean Rain Visor			–	As required								7-158
12.	Grease Cab Door Hinge			–	As required								7-158
13.	Grease Console Height Adjustment Pin			–	As required								7-159
14.	Check Windshield Washer Fluid Level			1	As required								7-160
15.	Check Track Sag			2									7-161
16.	Clean and Replace Air Conditioner Filter	Circulating Air Filter	Clean	1									7-166
			Replace	1	After cleaning 6 times or so								7-166
		Fresh Air Filter	Clean	1									7-166
			Replace	1	After cleaning 6 times or so								7-166
17.	Check Air Conditioner			–									7-169
18.	Clean Cab Floor			–	As required								7-172
19.	Retighten Engine Cylinder Head Bolt (Except ZX120-7, 160-7, 180-7 class)			–	*As required								7-173
20.	Inspect and Adjust Valve Clearance (Except ZX120-7 class)			–						*			7-173
21.	Measure Engine Compression Pressure (Except ZX120-7, 160-7, 180-7 class)			–						*			7-173
22.	Check Starter and Alternator (Except ZX160-7, 180-7 class)			–						*			7-173
23.	Check and Clean EGR Valve (Except ZX120-7 class)			–								*	7-173
24.	EGR Cooler Cleaning (Except ZX120-7 class)			–								*	7-173
25.	Check Turbo Charger (Except ZX120-7 class)			–								*	7-173
26.	Check and Clean Injector (Except ZX120-7 class)			–								*	7-174
27.	Check ECM and Related Sensors and Actuators (Only ZX160-7, 180-7 class)			–								*	7-174
28.	Check Aftertreatment Device and Related Sensors and Actuators (Only ZX160-7, 180-7 class)			–								*	7-174
29.	Check Gas Damper			–	*As required								7-174

Parts		Qty.	Interval (Hours)								Page
			8	50	100	250	500	1000	2000	4500	
30.	Check Reed Valve (Only ZX160-7, 180-7 class)	1								*	7-174
31.	Tightening and Retightening Torque of Nuts and Bolts	–		★★							7-175

★★ : Maintenance required only during first time check.

NOTE

** Contact your authorized dealer for maintenance. Instruction plate for the recommended grease and lubricants is affixed inside the tool box cover.*

J. Aftertreatment Device

Parts			Qty.	Interval (Hours)									Page
				8	50	100	250	500	1000	4500	6000	8000	
1.	Check, Clean and/or Replace Filter of Aftertreatment Device	ZX120-7 class (replace)	–							*			7-208
		ZX160-7, 180-7 class (Check)	–								*		
		ZX200-7, 240-7, 300-7, 330-7 class (Check, clean)	–									*	
2.	Check and Clean Aftertreatment Device		–	As required									7-208

NOTE

Note: For items with asterisks (*), contact your authorized dealer for checks and maintenance.

K. DEF SCR System Alarm (Except ZX120-7 class)

Parts			Qty.	Interval (Hours)									Page
				8	50	100	250	500	1000	2000	4500	8000	
1.	Check DEF		–										7-210
2.	Replace DEF Supply Module Main Filter	ZX160-7, 180-7 class	1	Every 3 years or 4500 hours, whichever comes first									7-219
		ZX200-7, 240-7, 300-7, 330-7 class	1										
3.	Replace DEF tank Water Supply Inlet Filter		1	*If DEF overflows when supplying water							*		7-221

NOTE

For items with asterisks (*), contact your authorized dealer for checks and maintenance.

L. Aerial Angle

Parts		Qty.	Interval (Hours)								Page
			8	50	100	250	500	1000	2000	4500	
1.	Daily check of camera images used to compose the aerial angle	–									7-222
2.	Check Camera Images Used to Compose the Aerial Angle	–	When performing a task affected by the installation position of the cameras.								7-223

Periodic Replacement of Parts

To ensure safe operation and long life, be sure to conduct periodic inspection and maintenance of the machine. In addition, the parts listed below, if defective, may pose serious safety/fire hazards.

These parts may pose serious safety/fire hazards due to deterioration, wear and fatigue due to aging of the materials or repeated operation.

It is very difficult to gauge the extent of deterioration, fatigue, or weakening of the parts listed below by visual inspection alone. For this reason, replace these parts at the intervals shown in the table below.

Contact your authorized dealer for replacing the parts.

Names of Parts that Require Periodic Replacement			Replacement Timing
Engine		Fuel Hose (fuel tank to filter to engine)	Every 2 years
		Fuel hose (engine to fuel cooler to tank)	Every 2 years
		DEF hose (Except ZX120-7 class)	Every 2 years
		Oil filter hose (Engine to oil filter)	Every 2 years
		Heater hose (Heater to engine)	Every 2 years
Hydraulic System	Base Machine	Pump Suction Hose	Every 2 years or 4000 hours, whichever comes first
		Pump Delivery Hose	Every 2 years or 4000 hours, whichever comes first
		Swing Hose	Every 2 years or 4000 hours, whichever comes first
		Travel High Pressure Hose	Every 2 years or 4000 hours, whichever comes first
		Tail Hose	Every 2 years or 4000 hours, whichever comes first
		Attachment Line Hose	Every 2 years or 4000 hours, whichever comes first
		Return Hose	Every 2 years or 4000 hours, whichever comes first
	Working Device	Boom cylinder line hose	Every 2 years or 4000 hours, whichever comes first
		Arm cylinder line hose	Every 2 years or 4000 hours, whichever comes first
		Bucket cylinder line hose	Every 2 years or 4000 hours, whichever comes first
Seat belt			Every 3 years

NOTE

Be sure to replace seals, such as O-rings and gaskets, when replacing hoses.

Kind of Oils

Recommended Grease

Kind of Grease		Lithium Grease
Application		Front Attachment Joint Pins, Swing Bearing, Swing Internal Gear
Air Temp.		-20 to 40 °C (-4 to 104 °F)
Recommended Products		Hitachi Genuine Grease NLGI EP-2
Alternative Products	Specification	NLGI 2 EP

IMPORTANT

- **Hitachi Genuine Greases are specially designed and tested to provide optimum performance for the machine, hence we recommend to use Hitachi Genuine Greases.**
- **If you do not use Hitachi Genuine Greases, use grease conforming to EP-2. Otherwise, the machine may suffer damage.**
- **Do not use greases which do not meet the above specification or requirements. Use of unsuitable grease may lead to damage which is excluded from Hitachi Warranty Policy.**
- **For details, contact your authorized dealer.**

Recommended Engine Oil

Kind of Oil		Engine Oil
Application		Engine Crank Case
Air Temp.		-20 to 40 ˚C (-4 to 104 ˚F)
Recommended Products		Hitachi Genuine Engine Oil 10W-40 DH-2
Alternative Products	Viscosity	10W-40
	Specification	JASO DH-2

IMPORTANT

- **Hitachi Genuine Engine Oils are specially designed and tested to provide optimum performance for Hitachi construction machinery, hence we recommend to use Hitachi Genuine Engine Oils.**
- **If you do not use Hitachi Genuine Engine Oil, use engine oil conforming to JASO DH-2. Otherwise, engine and aftertreatment device may suffer damage or performance of engine and aftertreatment device may deteriorate.**
- **Do not use oils which do not meet the above specification or requirements. Use of unsuitable oil may lead to engine damage which is excluded from Hitachi Warranty Policy.**
- **For details, contact your authorized dealer.**

Recommended Transmission Oil

Application		Swing and Travel Reduction Gear	Pump Transmission
Kind of Oil		Gear Oil	Engine Oil
Air Temp.		–20 to 40 °C (–4 to 104 °F)	–20 to 40 °C (–4 to 104 °F)
Recommended Products		Hitachi Gear Oil GL-4 90	Hitachi Genuine Engine Oil DH-2 10W-40 Hitachi Genuine Engine Oil DH-1 15W-40
Alternative Products	Specification	API GL-4	API CD, JASO DH-1, JASO DH-2

IMPORTANT

- **Hitachi Genuine Gear Oil and Hitachi Genuine Engine Oil are specially designed and tested to provide optimum performance for the machine, hence we recommend to use Hitachi Genuine Gear Oil and Hitachi Genuine Engine Oil .**
- **If you do not use Hitachi Genuine Gear Oil or Hitachi Genuine Engine Oil , use gear oil or engine oil conforming to specifications described above. Otherwise, the machine may suffer damage.**
- **Do not use oils which do not meet the above specification or requirements. Use of unsuitable oil may lead to engine damage which is excluded from Hitachi Warranty Policy.**
- **For details, contact your authorized dealer.**

Brand Names of Recommended Hydraulic Oil

Kind of Lubricant		Hydraulic Oil		
Where to be applied		Hydraulic System		
Environmental Temp.		–20 to 40 °C (–4 to 104 °F)		
Recommended Products		Hitachi Genuine Hydraulic Oil 5000	Hitachi Genuine Hydraulic Multi	
Alternative Products	Specification			Product Conforming to JCMAS HK VG46W
Change Interval		5000 hours	2000 hours	

NOTE

A different interval of oil change may be required for Alternative Products.
For details, contact your authorized dealer.

IMPORTANT

- **Hitachi Genuine Hydraulic Oils are specially designed and tested to provide optimum performance for the machine, hence we recommend to use Hitachi Genuine Hydraulic Oils.**
- **If you do not use Hitachi Genuine Hydraulic Oil , use Hydraulic oil conforming to JCMAS HK VG46W. Otherwise, the machine may suffer damage. For the information of JCMAS HK VG46W, refer to JALOS website.**
- **Do not use oils which do not meet the above specification or requirements. Use of unsuitable oil may lead to damage which is excluded from Hitachi Warranty Policy.**
- **For details, contact your authorized dealer.**

Recommended Oil Viscosity

Where to be Applied	Kind of Oil	Air Temperature (degrees Celsius)									
		-30	-20	-10	0	10	20	30	45		
Engine Oil Pan	Engine Oil										Hitachi Genuine Engine Oil DH-2 10W-40
Pump Transmission	Engine Oil										Hitachi Genuine Engine Oil DH-2 10W-40
											Hitachi Genuine Engine Oil DH-1 15W-40
Swing Reduction Gear Travel Reduction Gear	Gear Oil										Hitachi Gear Oil GL-4 90
Hydraulic System (Hydraulic Oil Tank)	Hydraulic Oil										Hitachi Genuine Hydraulic Oil 5000 Hitachi Genuine Hydraulic Oil Multi
Fuel Tank	Diesel Fuel										EN590 Class A
											EN590 Class B
											EN590 Class C
											EN590 Class D
											EN590 Class E
											EN590 Class F
Grease fitting	Lithium Grease										Hitachi Genuine Grease NLGI EP-2
Radiator	Coolant										Hitachi Genuine Long Life Coolant

List of Consumable Parts

ZX120-7 class

Filter Elements

	Part No.	Quantity
High Performance Full-Flow Filter (with O-ring)	4448401	1
High Performance Full-Flow Filter	4450002	1
Hydraulic Air Breather Element	4437838	1
Pilot Oil Filter (with O-ring)	4630525	1
Engine Oil Filter	YA00072857	1
Fuel Main Filter Element	YA00034622	1
Fuel Pre-Filter Element	YA00005785	1
Fuel Filter Element (Automatic Refueling Device)	YA00029016	1
Air Cleaner Element (outer)	4486002	1
Air Cleaner Element (inner)	4486014	1
Air Conditioner Circulating Air Filter	YA00054032	1
Air Conditioner Fresh Air Filter	YA00022308	1
Oil Separetor Element	YA00077204	1

Drive Belts

	Part No.	Quantity
V-Belt	YA00053705	1
Timing Belt	YA00077443	1

Others

	Part No.	Quantity
Wiper Blade	YA00065534	1
Screen Fastener (For Roll Screen)	XB00017920	2

Bucket Parts

		Part No.	Quantity
Tooth	Tooth	963228	5
	Lock Pin	963229	5
	Lock Rubber	963227	5
	Side Cutter (right side)	2015428	1
	Side Cutter (left side)	2015429	1
Side Cutter	Bolt	J932060	8
	Nut	J951020	8
	Spring Washer	A590920	8
O-ring		4276696	4

NOTE

Quantity row on the above table represents number of parts used for one bucket. The parts quantity of O-ring includes connection part of arm and link.

		Part No.	Quantity
One Point Ripper	Tooth	971377	1
	Pin	971378	1
	Bushing Rubber	971379	1

ZX160-7, 180-7 class

Filter Elements

	ZX160-7 class	ZX180-7 class	Quantity
	Part No.	Part No.	
High Performance Full-Flow Filter	YA00033064	←	1
Hydraulic Air Breather Element	4437838	←	1
Pilot Oil Filter (with O-ring)	4630525	←	1
Engine Oil Filter	YA00077011	←	1
Fuel Main Filter Element	YA00034622	←	1
Fuel Pre-Filter Element	YA00005785	←	1
Fuel Filter Element (Automatic Refueling Device)	YA00029016	←	1
Air Cleaner Element (outer)	4286128	←	1
Air Cleaner Element (inner)	4286130	←	1
Air Conditioner Circulating Air Filter	YA00054032	←	1
Air Conditioner Fresh Air Filter	YA00022308	←	1
DEF Supply Module Main Filter	YA00078038	←	1
DEF Tank Water Supply Inlet Filter	YA60050027	←	1
Oil Separator Filter	YA00077043	←	1

Drive Belts

	ZX160-7 class	ZX180-7 class	Quantity
	Part No.	Part No.	
Engine Fan Belt	YA00077009	←	1
Air Conditioner Compressor Belt	4365372	←	1

Others

	Part No.	Quantity
Wiper Blade	YA00065534	1
Screen Fastener(For Roll Screen)	XB00017920	2

Bucket Parts

		ZX160-7 class		ZX180-7 class	
		Part No.	Quantity	Part No.	Quantity
Tooth	Tooth	963228	5	4427919	4
	Lock Pin	963229	5	4501627	4
	Lock Rubber	963227	5	4501625	4
Side Cutter	Side Cutter (right side)	2015428	1	2014503	1
	Side Cutter (left side)	2015429	1	2014504	1
	Bolt	J932060	8	J932270	12
	Nut	J951020	8	J951022	12
	Spring Washer	A590920	8	A590922	12
O-ring		4089028	4	4089028	4

NOTE

Quantity row on the above table represents number of parts used for one bucket. The parts quantity of O-ring includes connection part of arm and link.

Optional Parts

		ZX160-7 class	ZX180-7 class	Quantity
		Part No.	Part No.	
One Point Ripper	Tooth	971377	←	1
	Pin	971378	←	1
	Bushing Rubber	971379	←	1

ZX200-7 class

Filter Elements

	Part No.	Quantity
High Performance Full-Flow Filter	YA00033064	1
Hydraulic Air Breather Element	4437838	1
Pilot Oil Filter (with O-ring)	4630525	1
Engine Oil Filter	4658521	1
Fuel Main Filter Element	YA00033486	1
Fuel Pre-Filter Element	YA00005785	1
Fuel Filter Element (Automatic Refueling Device)	YA00029016	1
Air Cleaner Element (outer)	4286128	1
Air Cleaner Element (inner)	4286130	1
Air Conditioner Circulating Air Filter	YA00054032	1
Air Conditioner Fresh Air Filter	YA00032683	1
DEF Supply Module Main Filter	YA00047054	1
DEF Tank Water Supply Inlet Filter	YA60050027	1

Drive Belts

	Part No.	Quantity
Engine Fan Belt	4642643	1
Air Conditioner Compressor Belt	4467553	1

Others

	Part No.	Quantity
Wiper Blade	YA00065534	1
Screen Fastener(For Roll Screen)	XB00017920	2

Bucket Parts

		Part No.	Quantity
Tooth	Tooth	4427919	5
	Lock Pin	4501627	5
	Lock Rubber	4501625	5
Side Cutter	Side Cutter (right side)	2014503	1
	Side Cutter (left side)	2014504	1
	Bolt	J932270	12
	Nut	J951022	12
	Spring Washer	A590922	12
O-ring		4089028	4

NOTE

Quantity row on the above table represents number of parts used for one bucket. The parts quantity of O-ring includes connection part of arm and link.

Optional Parts

		Part No.	Quantity
One Point Ripper	Tooth	971377	1
	Pin	971378	1
	Bushing Rubber	971379	1
Ripper Bucket	Tooth	971377	1
	Pin	971378	1
	Bushing Rubber	971379	1
	Tooth	4427919	2
	Lock Pin	4501627	2
	Lock Rubber	4501625	2
Reinforced Hoe Bucket HD Type	Tooth	4427919	5
	Lock Pin	4501627	5
	Lock Rubber	4501625	5

ZX240-7, 300-7 class

Filter Elements

	ZX240-7 class	ZX300-7 class	Quantity
	Part No.	Part No.	
High Performance Full-Flow Filter	YA00033064	←	1
Hydraulic Air Breather Element	4437838	←	1
Pilot Oil Filter (with O-ring)	4630525	←	1
Engine Oil Filter	4658521	←	1
Fuel Main Filter Element	YA00033486	←	1
Fuel Pre-Filter Element	YA00005785	←	1
Fuel Filter Element (Automatic Refueling Device)	YA00029016	←	1
Air Cleaner Element (outer)	4286128	4459549	1
Air Cleaner Element (inner)	4286130	4459548	1
Air Conditioner Circulating Air Filter	YA00054032	←	1
Air Conditioner Fresh Air Filter	YA00022308	←	1
DEF Supply Module Main Filter	YA00047054	←	1
DEF Tank Water Supply Inlet Filter	YA60050027	←	1

Drive Belts

	ZX240-7 class	ZX300-7 class	Quantity
	Part No.	Part No.	
Engine Fan Belt	4642643	4603925	1
Air Conditioner Compressor Belt	4467553	4612331	1

Others

	Part No.	Quantity
Wiper Blade	YA00065534	1
Screen Fastener(For Roll Screen)	XB00017920	2

Bucket Parts

		Part No.	Quantity
Tooth	Tooth	4512365	5
	Lock Pin	4512366	5
	Lock Rubber	4501625	5
Side Cutter	Side Cutter (right side)	2021232	1
	Side Cutter (left side)	2021233	1
	Bolt	J932275	12
	Nut	J951022	12
	Spring Washer	A590922	12
O-ring		4089028	4

NOTE

Quantity row on the above table represents number of parts used for one bucket. The parts quantity of O-ring includes connection part of arm and link.

Optional Parts

		Part No.	Quantity
One Point Ripper	Tooth	4507888	1
	Pin	4507890	1
	Bushing Rubber	4507891	1
Ripper Bucket	Tooth	4507888	1
	Pin	4507890	1
	Bushing Rubber	4507891	1
	Tooth	4383048	2
	Lock Pin	4383069	2
Rock Bucket	Tooth	4400253	5
	Lock Pin	4383465	5
	Shroud	4435856	1
	Shroud	4435857	1
	Bolt	J932780	6
	Nut	J951027	6
	Washer	4085857	6
Ditch Cleaning Bucket (0.36 m^3, 0.40 m^3, 0.50 m^3)	Tooth	973347	*
	Lock Pin	963229	*
	Lock Rubber	963227	*
Reinforced Hoe Bucket HD Type	Tooth	4512365	5
	Lock Pin	4512366	5
	Lock Rubber	4501625	5
*2 Reinforced Hoe Bucket HD Type (Transverse-Type-Pin)	Tooth	4380343	5
	Pin	4380344	5

NOTE

** The parts quantity of items with * mark.*

- *Four parts are required per each bucket of 0.36, 0.40, and 0.50 m^3.*
- *Seven parts are required per one ditch cleaning bucket with teeth.*
- *An item with *2 mark is for ZX240-7 class.*

ZX330-7 class

Filter Elements

	Part No.	Quantity
High Performance Full-Flow Filter	YA00033064	1
Hydraulic Air Breather Element	4437838	1
Pilot Oil Filter (with O-ring)	4630525	1
Engine Oil Filter	4658521	1
Fuel Main Filter Element	YA00033486	1
Fuel Pre-Filter Element	YA00005785	1
Fuel Filter Element (Automatic Refueling Device)	YA00029016	1
Air Cleaner Element (outer)	4459549	1
Air Cleaner Element (inner)	4459548	1
Air Conditioner Circulating Air Filter	YA00054032	1
Air Conditioner Fresh Air Filter	YA00022308	1
DEF Supply Module Main Filter	YA00047054	1
DEF Tank Water Supply Inlet Filter	YA60050027	1

Drive Belts

	Part No.	Quantity
Engine Fan Belt	4603925	1
Air Conditioner Compressor Belt	4612331	1

Others

	Part No.	Quantity
Wiper Blade	YA00065534	1
Screen Fastener(For Roll Screen)	XB00017920	2

Bucket Parts

		Part No.	Quantity
Tooth	Tooth	4512365	5
	Lock Pin	4512366	5
	Lock Rubber	4501625	5
Side Cutter	Side Cutter (right side)	2021232	1
	Side Cutter (left side)	2021233	1
	Bolt	J932275	12
	Nut	J951022	12
	Spring Washer	A590922	12
O-ring		4100180	4

NOTE

Quantity row on the above table represents number of parts used for one bucket. The parts quantity of O-ring includes connection part of arm and link.

Optional Parts

		Part No.	Quantity
One Point Ripper	Tooth	4507888	1
	Pin	4507890	1
	Bushing Rubber	4507891	1
Ripper Bucket	Tooth	4507888	1
	Pin	4507890	1
	Bushing Rubber	4507891	1
	Tooth	4383048	2
	Lock Pin	4383069	2
Rock Bucket	Tooth	4400253	5
	Lock Pin	4383465	5
	Shroud	4435856	1
	Shroud	4435857	1
	Bolt	J932780	6
	Nut	J951027	6
	Washer	4085857	6
Ditch Cleaning Bucket	Tooth	973347	*
	Lock Pin	963229	*
	Lock Rubber	963227	*
Hoe Bucket (Super V)	Tooth	4400250	5
	Lock Pin	4400252	5
Rock Bucket (Transverse- Type-Pin)	Tooth	4380343	5
	Pin	4380844	5

NOTE

** The parts quantity of items with * mark.*

- *Four parts are required per each bucket of 0.50, 0.60, and 0.70 m^3.*
- *Seven parts are required per one ditch cleaning bucket with teeth.*

A. Greasing

1 Front Joint Pins

1. Park the machine according to the instructions on Preparations for Inspection and Maintenance (7-8).
2. Lubricate all grease fittings shown in the figure.

--- every 500 hours (first time only, after 250 hours)

- Bucket

IMPORTANT

The lubrication interval differs depending on the bucket type. For details, refer to (7-14).

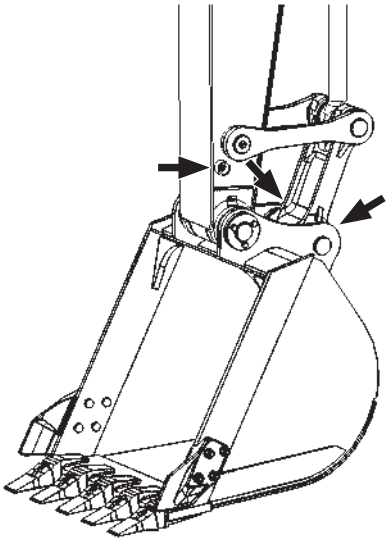

ZX120-7 class

MDA4-07-015-1 ja

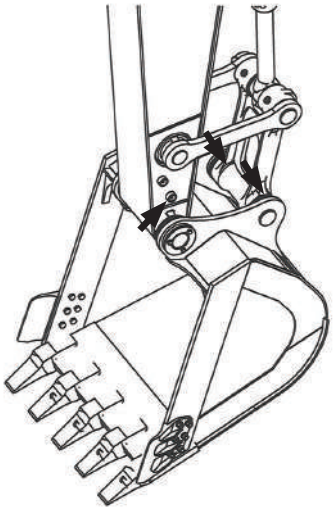

ZX160-7, 180-7, 200-7, 240-7, 300-7, 330-7 class

MDFY-07-061-2 ja

- Link pins

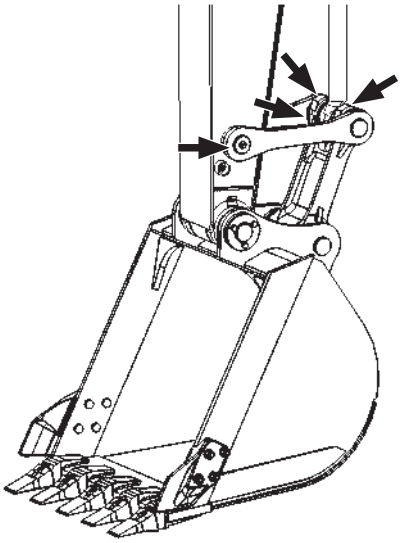

ZX120-7 class

MDA4-07-016-1 ja

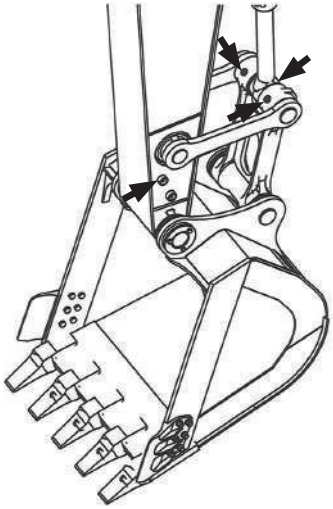

ZX160-7, 180-7, 200-7, 240-7, 300-7, 330-7 class

MDFY-07-061-4 ja

- Boom Cylinder, Bottom Side

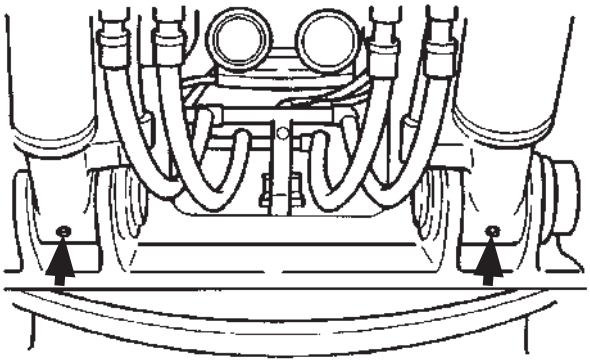

M157-07-156-2 ja

- Boom Foot

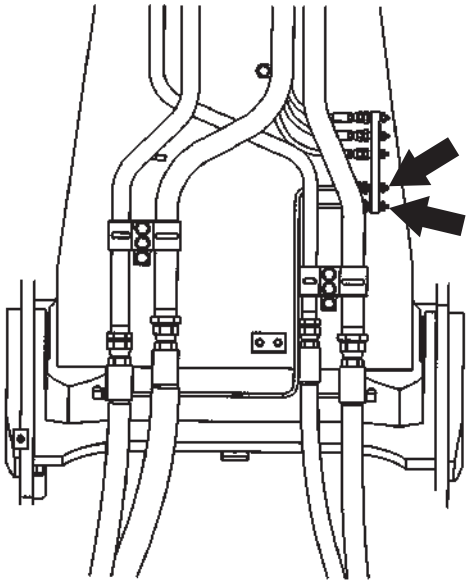

MDFY-07-103-1 ja

- Boom and Arm Joint Pin, Arm Cylinder Rod Pin and Bucket Cylinder Bottom Pin

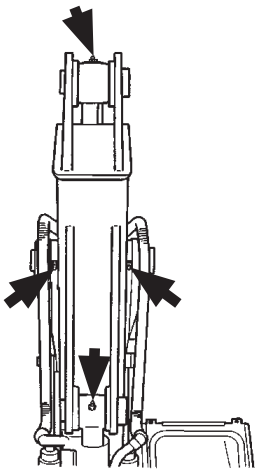

M157-07-157-1 ja

- Boom Cylinder Rod Pins and Arm Cylinder Bottom Pin

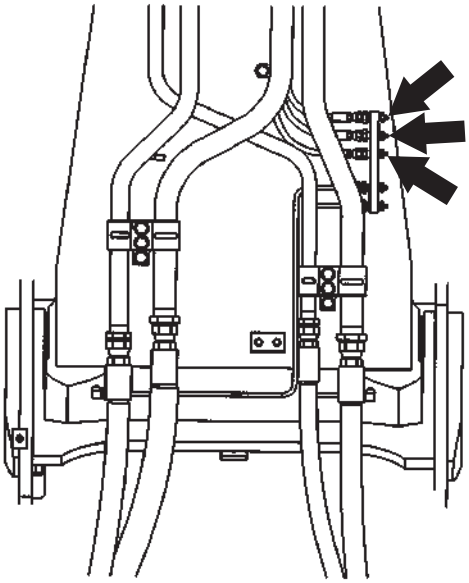

MDFY-07-103-2 ja

2 Swing Bearing

--- every 500 hours

CAUTION

Lubricating both the swing bearing and gear, and rotating the upperstructure must be done by one person. Before you lubricate the swing bearing, clear the area of all persons.

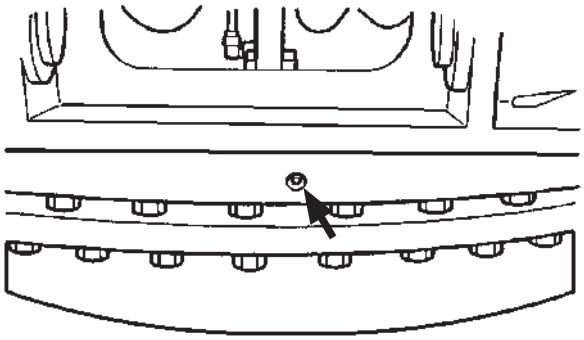

M157-07-159-2 ja

Each time you leave the cab

- Lower the bucket to the ground.
- Stop the engine.
- Set the pilot shut-off lever to the LOCK position.
- Use handrails.

1. Park the machine on a level surface.
2. Lower the bucket to the ground.
3. Turn the auto-idle switch off.

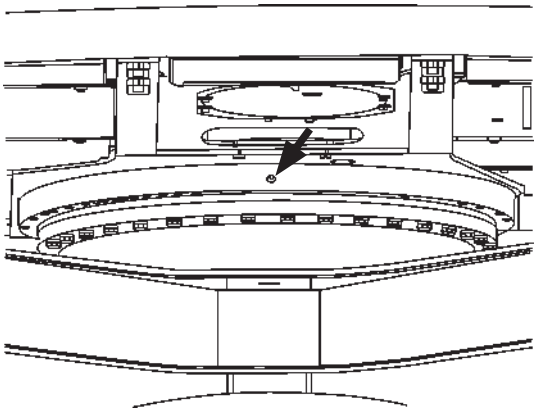

MDCR-07-015-2 ja

IMPORTANT

The turbocharger may be damaged if the engine is not properly shut down.

4. Run the engine at slow idle speed without load for five minutes.
5. Turn the key switch OFF. Remove the key from the key switch.
6. Set the pilot shut-off lever to the LOCK position.
7. With the upperstructure stationary, apply grease via the 2 grease fittings.
8. Start the engine. Raise the bucket several inches off the ground and rotate the upperstructure 45° (1/8 turn).
9. Lower the bucket to the ground.
10. Repeat the procedure 3 times, beginning with step 3.
11. Apply grease to the swing bearing until grease can be seen escaping from the swing bearing seals.

Model	Capacity(L)
ZX120-7 class	0.25 L
ZX160-7, 180-7, 200-7 class	0.30 L
ZX240-7, 300-7 class	0.35 L
ZX330-7 class	0.40 L

12. Take care not to supply excessive grease.

3 Swing Gear

---every 500 hours

CAUTION

Before lubricating the machine, lower the bucket and blade (optional) to the ground, stop the engine and put the pilot shut-off lever in the LOCK position.

1. Remove cover (1) on top of the upperstructure and check whether the swing internal gear is greased properly or not.
2. Insert scale (2) and confirm that the level (H) of the grease in the swing internal gear is at or above the reference value level.
   In certain models, the measured level will differ depending on the position at which the scale is inserted. If the measured value differs by a large amount from what is expected, try inserting the scale in a different position.

Model	Grease level (H)
ZX120-7 class	16 mm
ZX160-7, 180-7, 200-7 class	28 mm
ZX240-7, 300-7 class	5 mm
ZX330-7 class	10 mm

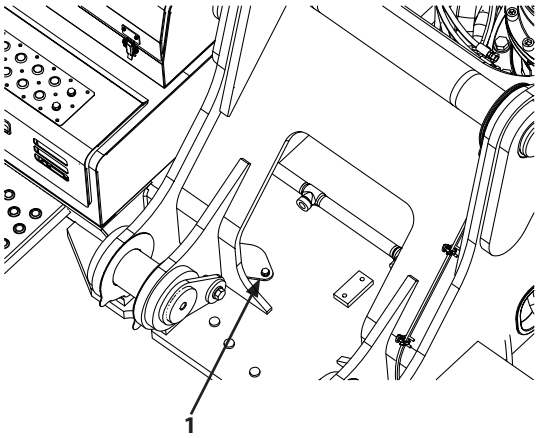

MDC1-07-038-2 ja

3. If the grease level is low, add grease, fit cover (1) facing downwards, paying attention to the O-ring. Then start the engine. Perform 2 or 3 swings, and then check again whether the grease level (H) is sufficient.

If the grease is cloudy due to the infiltration of water, mud etc., remove cover (3) on the undercarriage, remove all the old grease, and replace it with new grease.

Model	Grease Qty. (L)
ZX120-7 class	9 L
ZX160-7, 180-7, 200-7, 240-7, 300-7 class	17 L
ZX330-7 class	19 L

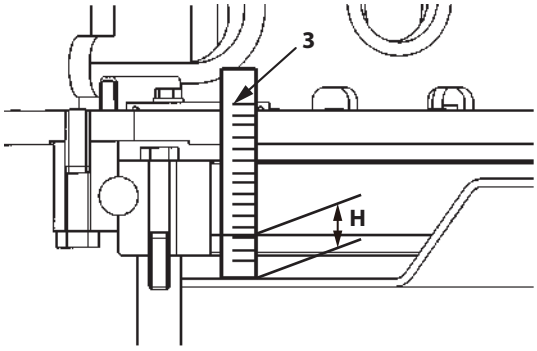

ZX120-7 class

MDC1-07-106-1 ja

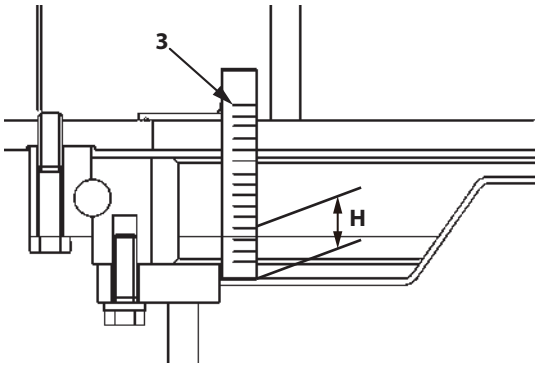

ZX160-7, 180-7, 200-7 class

MDC1-07-107-1 ja

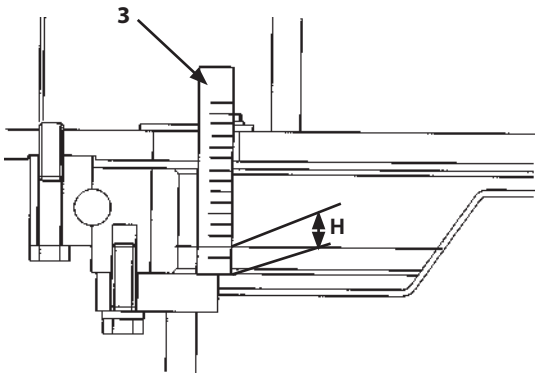

ZX240-7, 300-7, 330-7 class

MDC1-07-102-4 ja

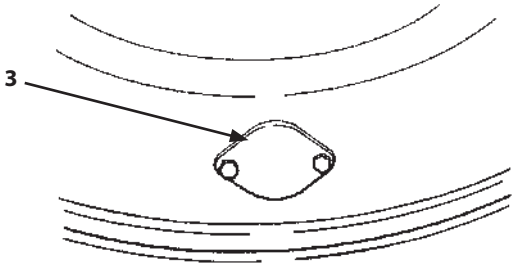

M157-07-161-1 ja

B. Engine

1 Check Engine Oil Level

--- daily (before starting the engine)

1. Confirm that pilot shut-off lever (1) is in the LOCK position.
2. Confirm that all control levers are placed in neutral.

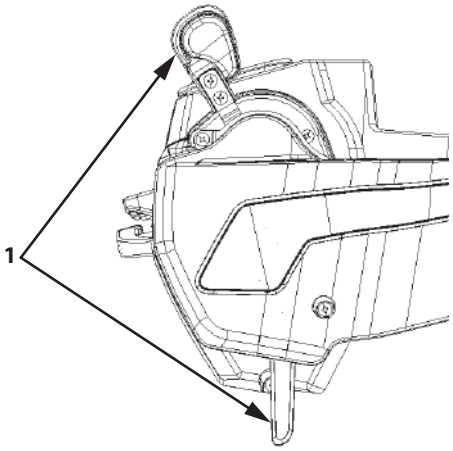

LOCK position

MDFY-01-088-2 ja

3. Insert key (2) into the key switch and turn it to the ON position. Press and hold home switch (3) with the engine stopped.
   The engine oil level indicator (4) must be displayed in green.

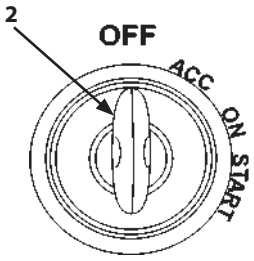

MDCD-01-030-3 ja

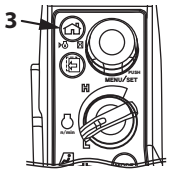

MDFY-01-094-8 ja

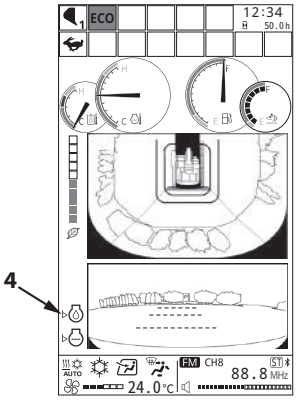

MDFY-MT-130-1 ja

IMPORTANT

Do not rely only on the monitor display for checking the machine conditions.
Visually check them yourself as required.
Always check the machine on a firm, level surface.
Do not start the engine during the check.

NOTE

If the security function is enabled, a password is required (refer to Security Functions (Optional) in chapter 1 "OPERATOR'S STATION").

--- Visual Inspection

IMPORTANT

Incorrect engine oil level may cause trouble in the engine (The oil level should be between the upper and lower marks on the dipstick). Even if the engine oil level is above the upper limit, get it back to the proper level before starting the engine.

Always check the oil level before starting the engine.

Open the engine cover and pull out dipstick (1), wipe it off with a cloth, re-insert it into the pipe to the end, and then pull it out again.

The level is correct if the oil is between the upper (H) and lower (L) marks on dipstick (1).

If the oil level is below the low mark (L), add the recommended engine oil via oil filler (2).
If the oil level is above the upper mark (H), remove cap (4) of drain valve (3) at the bottom of the engine oil pan, and then open drain valve (3) by turning drainer (5) to drain oil.

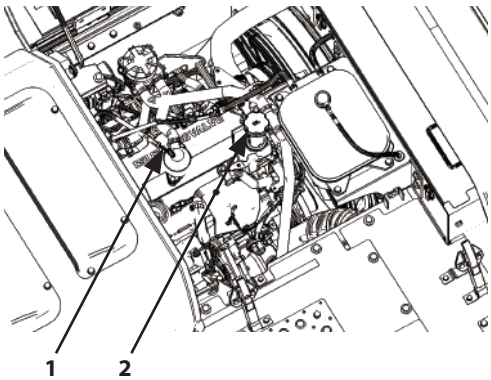

MDFY-07-007-1 ja

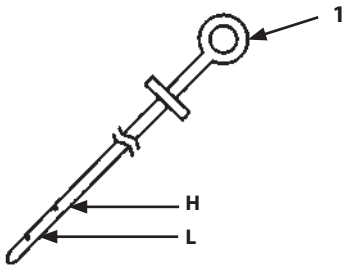

M178-07-011-2 ja

CAUTION

Avoid spillages when adding oil. If oil is spilled, wipe it up. If spilled oil is left as-is, it may lead to a fire.
After refilling, make sure oil filler cap (2) is securely closed.

IMPORTANT

Install drainer (5) to drain the valve slowly. A large quantity of oil may be discharged if it is screwed in all at once.

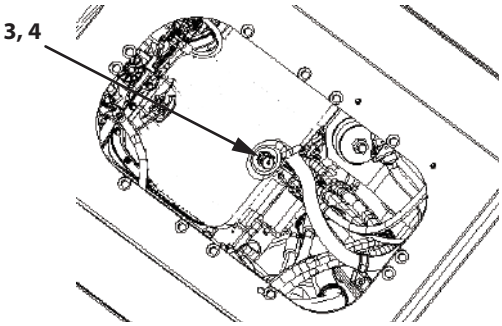

MDFY-07-008-2 ja

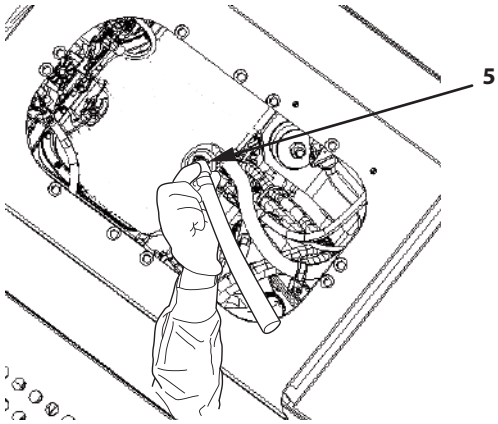

MDFY-07-009-2 ja

2 Change Engine Oil

--- every 500 hours

3 Replace Engine Oil Filter

--- every 500 hours

CAUTION

Engine oil may be hot just after operation. Take extra care to avoid burns.
After refilling, make sure oil filler cap (2) is securely closed.

1. Run the engine to warm oil.
   DO NOT run the engine until oil is hot.
2. Park the machine on a level surface.
3. Lower the bucket to the ground.
4. Turn the auto-idle switch off.

IMPORTANT

The turbocharger may be damaged if the engine is not properly shut down.

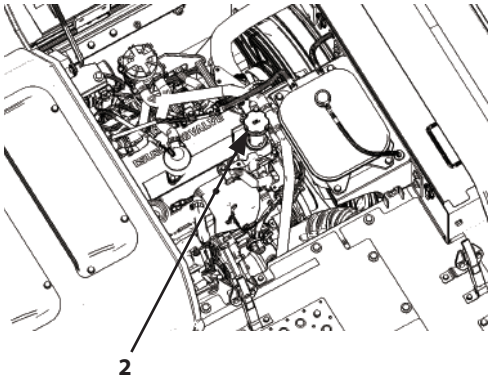

MDFY-07-007-2 ja

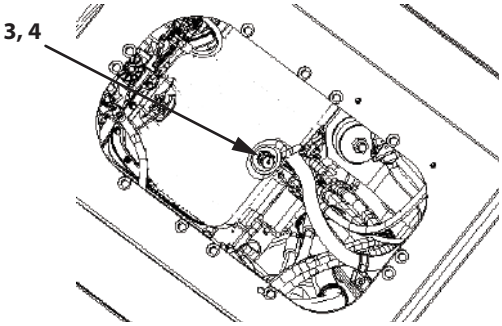

MDFY-07-008-2 ja

5. Run the engine at slow idle speed without load for 5 minutes.
6. Turn the key switch OFF. Remove the key from the key switch.
7. Set the pilot shut-off lever to the LOCK position.

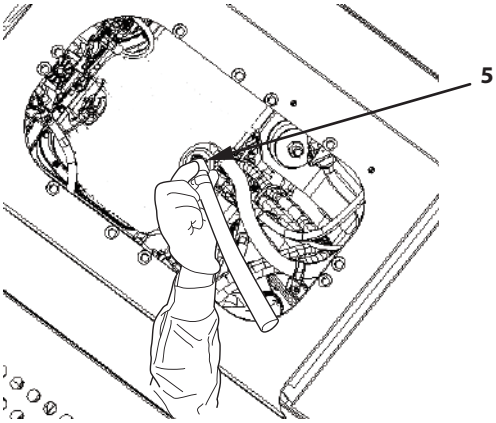

MDFY-07-009-2 ja

IMPORTANT

Install drainer (5) to drain valve (3) slowly. Oil may be discharged in large quantities when suddenly tightened.

8. Remove oil filler cap (2).
9. Remove cap (4) from oil pan drain valve (3). Install drainer (5) to drain valve (3).
10. Screw drainer (5) into drain valve (3). Drain valve (3) will be opened to drain oil.
11. Then, allow oil to drain through a clean cloth (A) into a container.

    ZX120-7, 160-7, 180-7, 200-7, 240-7 class : 50-liter
    ZX300-7, 330-7 class : 60-liter

12. After all oil has been drained, inspect the cloth(A) for any debris such as small pieces of metal.
13. Remove drainer (5). Install cap (4) to drain valve (3).

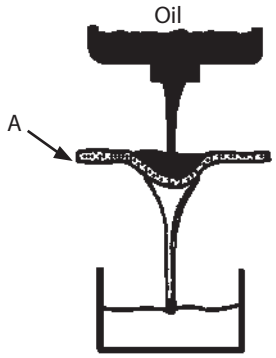

M104-07-010-2 en_GB

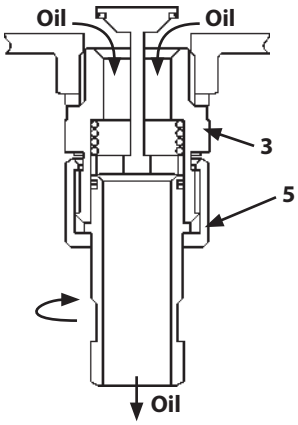

M1U1-07-002-2 en_GB

14. Open the right access cover and secure the cover with the rod.
15. Remove engine oil filter (6) by turning it counterclockwise with the filter wrench.
16. Clean filter (6) gasket contact area on the engine.
17. Put new oil in from primary side (7) of new cartridge element (6) so it does not overflow. Take care not to insert it from secondary side (8).
18. Install new filter (6). Turn filter (6) clockwise by hand until the gasket touches the contact area. Take care not to damage the gasket when installing filter (6).
19. Tighten engine oil filter (6) 3/4 to 1 turn further using the filter wrench. Be careful not to overtighten.
20. Fill the engine with a recommended oil. After 15 minutes, check that the oil level is between the circle marks on the dipstick.
21. Install the oil filler cap.
22. Start the engine. Run the engine at slow idle for 5 minutes.
23. Check that the engine oil pressure indicator on the monitor panel goes out immediately. If not, stop the engine immediately and find the cause.
24. Stop the engine. Remove the key from the key switch.
25. Check for any leakage at the drain plug.
26. Check oil level on the dipstick and add or drain oil to maintain proper oil level. (The oil level should be between the upper and lower limit marks on the oil level gauge.) (Refer to the page page 7-51)

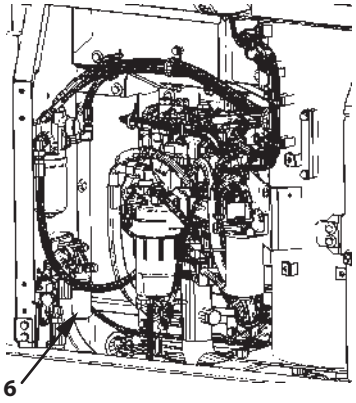

ZX120-7 class

MDFY-07-112-1 ja

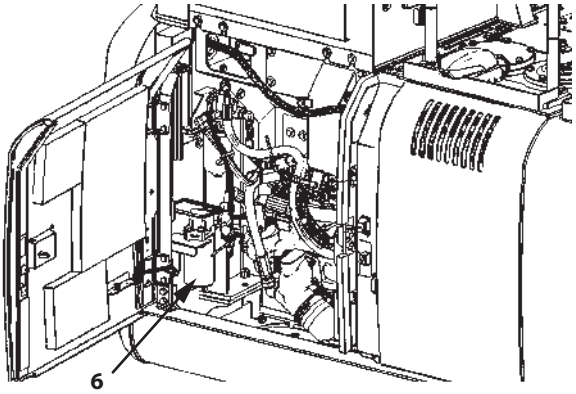

ZX160-7, 180-7 class

MDFY-01-134-1 ja

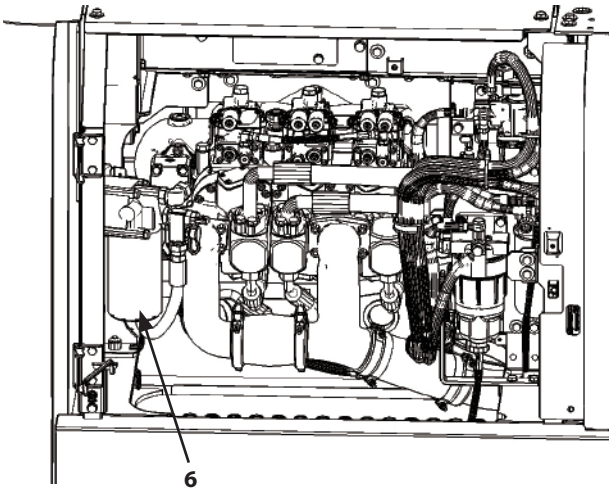

ZX200-7, 240-7 class

MDFY-07-010-1 ja

IMPORTANT

- **When putting new oil in cartridge element (6), take care that no foreign objects get in from secondary side (8).**
- **Do not re-use filter (6).**
- **Incorrect engine oil level may cause trouble in the engine. Even if the engine oil level exceeds the upper limit, control the oil level to the proper quantity before starting the engine.**

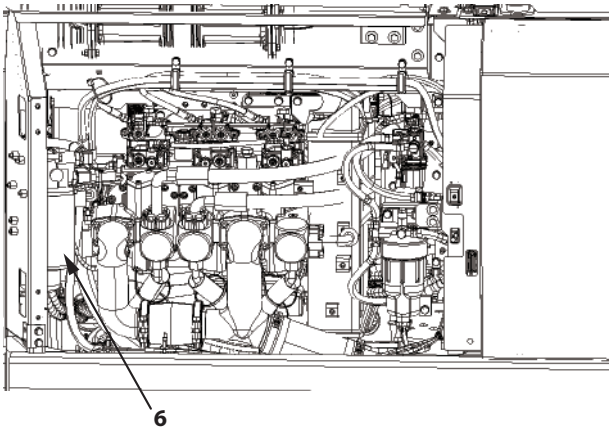

ZX300-7, 330-7 class

MDFY-07-046-1 ja

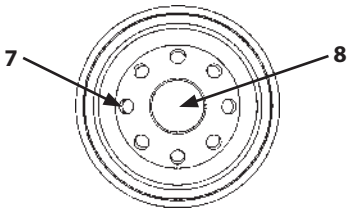

MDCR-07-007-1 ja

Sampling the Engine Oil

NOTE

The line is equipped with a valve (10) for sampling the engine oil. The valve has a cap (9).
For instructions on sampling the engine oil, contact your authorized dealer.

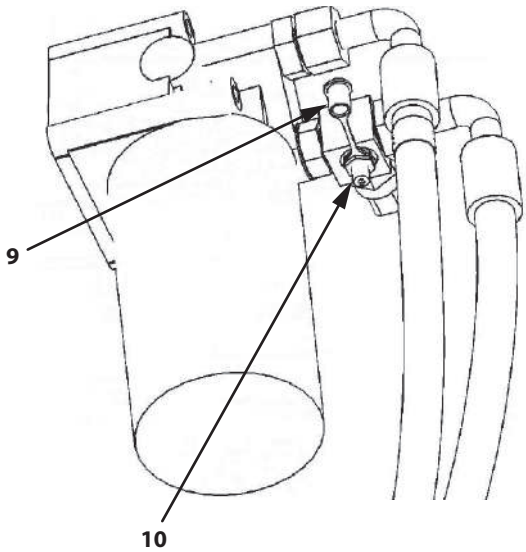

MDC1-07-112-1 ja

4 Check and Clean around the Engine

---as required

IMPORTANT

Check for flammable materials in the area around the engine and clean that area.

When the machine is operated in dusty areas, refer to chapter 9, “MAINTENANCE UNDER SPECIAL ENVIRONMENTAL CONDITIONS”.

5 Check the Blowby Hose

---as required

CAUTION

Immediately after operation, blowby hose (1) will be hot. Touching it will result in burns. Wait for the temperature to drop before starting any maintenance work.

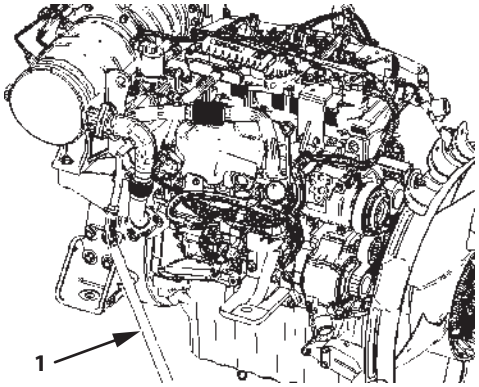

ZX120-7 class

MDFY-07-116-1 ja

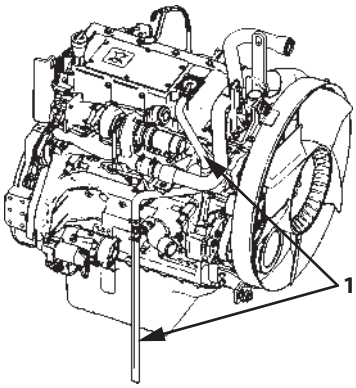

ZX160-7, 180-7 class

MDFY-01-136-1 ja

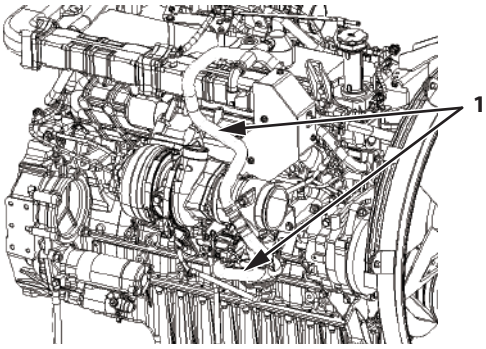

ZX300-7, 330-7 class

MDFY-07-093-1 ja

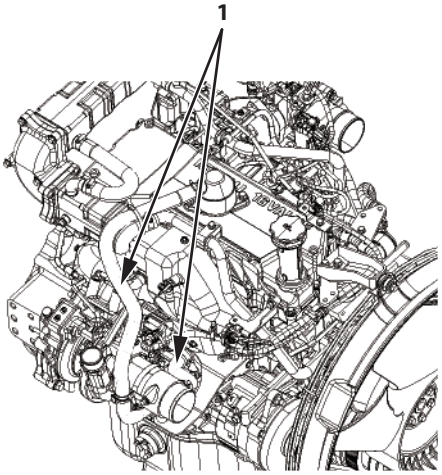

ZX200-7, 240-7 class

MDFY-07-092-1 ja

- Check that the hoses are free from kinks, do not rub against each other or other parts, and are free from oil leaks.
- Repair or replace any loose or damaged hoses.
- Never reinstall bent or damaged hoses.

Check for oil leaks or damage to hoses according to the check points shown below.
If any abnormality is found, replace as instructed in the table.

IMPORTANT

Before replacing components, clean the engine and the area around blowby hose (1) to make sure no dirt gets inside.

Hose

Interval (Hours)	Check Points	Check For	Remedies
As required	Hose covers	Cracking, deterioration rub marks, oil leaks	Replace
	Hose	Bends	Replace
	Hose clamps	Damage	Replace

6 Replace Oil Separator Element

ZX120-7 class---every 1500 hours
ZX160-7, 180-7 class---every 4500 hours

CAUTION

Immediately after operation, the oil separator is hot. Touching it will result in burns. Wait for it to cool before starting any maintenance work.

IMPORTANT

Before replacing the oil separator element, clean around the cap to prevent any debris from getting inside.

Replacement Procedure

ZX120-7 class

1. Park the machine on solid and level ground with the bucket cylinder fully extended and the arm cylinder fully retracted. Lower the bucket and blade (optional) to the ground. Stop the engine.
2. Remove cover (1) and the 6 bolts (2), then remove with gasket (4).
   Cover the oil separator with a plastic bag or the like after removing the filter to prevent foreign matter from getting inside the oil separator.
3. Replace oil separator filter (3) so the plastic part is on the bottom.
4. Replace gasket (4) with a new one and install it with cover (1) and the 6 bolts (2).
   When installing the cover, make sure the gasket is not pinched.
   Tighten bolts (2) to a torque of 8 N·m.

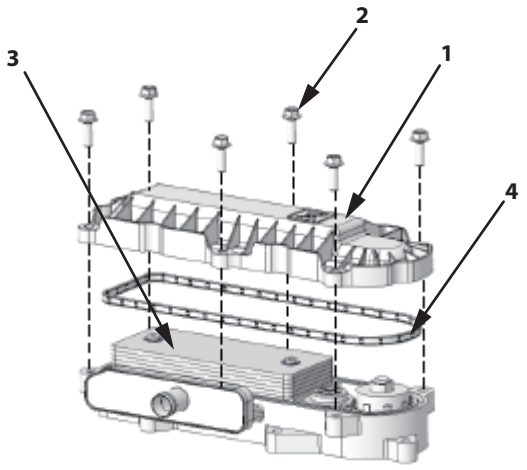

MDFY-07-155-1 ja

ZX160-7, 180-7 class

1. Park the machine on solid, level ground with the bucket cylinder fully extended and the arm cylinder fully retracted. Lower the bucket to the ground. Stop the engine.
2. Remove cover (5) and the 6 bolts (6), then remove with gasket (7).
3. Replace oil separator element (8).
4. Replace gasket (7) with a new one and install it with cover (5) and the 6 bolts (6).
   Tighten bolts (6) to a torque of 8.6±0.8 N·m.

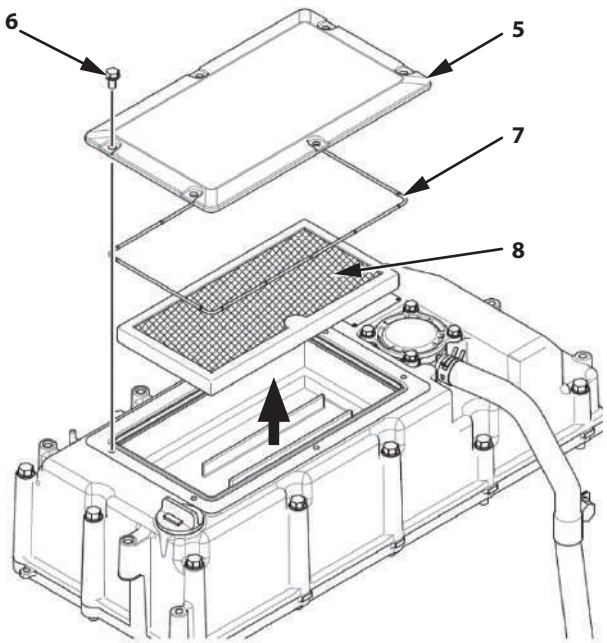

MDFY-07-156-1 ja

7 Timing Belt

(Only ZX120-7 class)
Every 6000 hours

Contact your authorized dealer to for replacement.

8 Timing Belt Cover

(Only ZX120-7 class)

Inspect ・・・ Every 6000 hours
Replace ・・・ If engine oil is spilled on the timing belt cover:

Contact your authorized dealer to have it inspected/replaced.

C. Transmission

1 Pump Transmission

(Except ZX120-7 class)

Check Oil Level --- every 250 hours

1. Park the machine on a level surface.
2. Lower the bucket to the ground.
3. Turn the auto-idle switch off.

IMPORTANT

The turbocharger may be damaged if the engine is not properly shut down.

4. Run the engine at slow idle speed without load for 5 minutes.
5. Stop the engine. Remove the key from the key switch.
6. Set the pilot shut-off lever to the LOCK position.
7. Remove dipstick (1). Oil must be within the specified range (A).
8. If necessary, remove filler plug (2) and add oil. (See gear oil chart)
9. Recheck oil level.

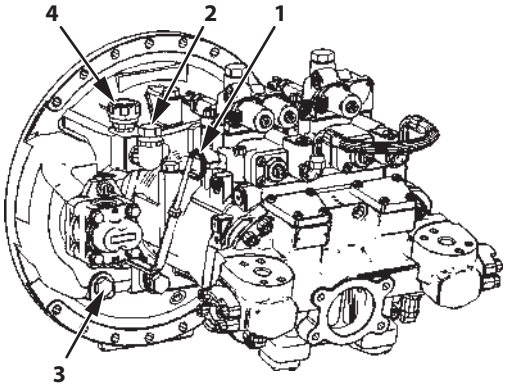

ZX160-7, 180-7 class

MDFY-01-137-1 ja

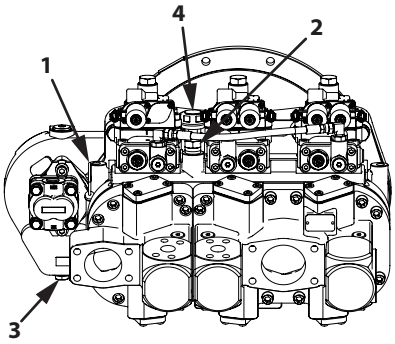

ZX200-7, 240-7 class

MDFY-07-161-1 ja

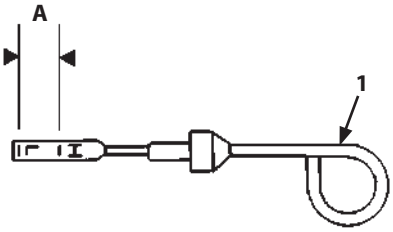

M1G6-07-004-2 ja

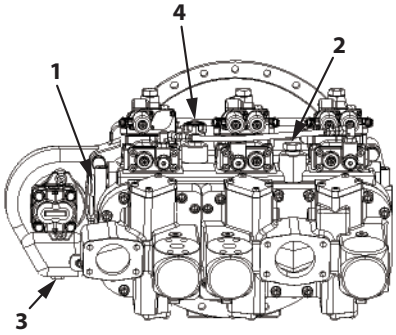

ZX300-7, 330-7 class

MDFY-07-047-2 ja

Change Oil --- every 1000 hours

Air Breather Cleaning --- every 1000 hours

CAUTION

Oil may be hot just after operation. Wait for oil to cool before starting work.

1. Park the machine on a level surface.
2. Lower the bucket to the ground.
3. Turn the auto-idle switch off.

IMPORTANT

The turbocharger may be damaged if the engine is not properly shut down.

4. Run the engine at slow idle speed without load for 5 minutes.
5. Stop the engine. Remove the key from the key switch.
6. Set the pilot shut-off lever to the LOCK position.
7. Remove filler plug (2).
8. Remove drain plug (3). Allow oil to drain through a clean cloth into a 2-liter container.
9. After all oil has drained, inspect cloth for any debris such as small pieces of metal.
10. Reinstall drain plug (3).
11. Add oil via filler plug (2) until it is within the specified range (A) on dipstick (1).
12. Reinstall filler plug (2).
13. Remove air breather (4) and perform cleaning. After cleaning, install air breather (4).

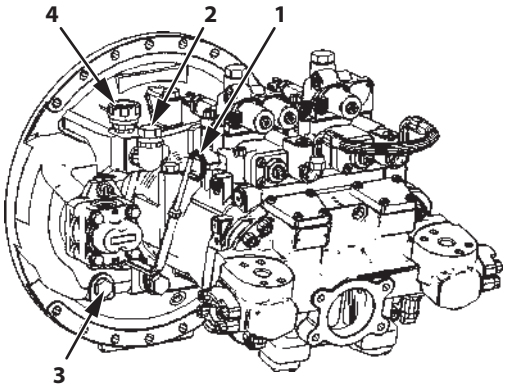

ZX160-7, 180-7 class

MDFY-01-137-1 ja

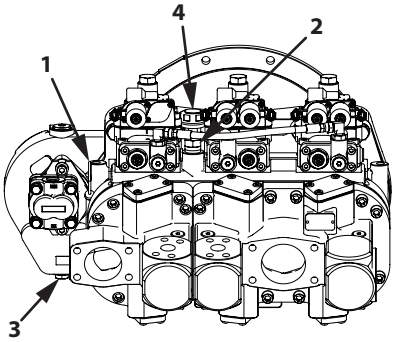

ZX200-7, 240-7 class

MDFY-07-161-1 ja

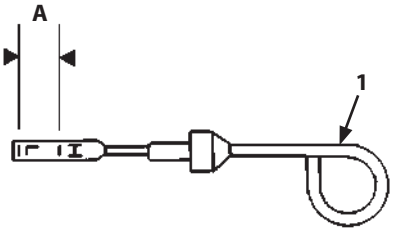

M1G6-07-004-2 ja

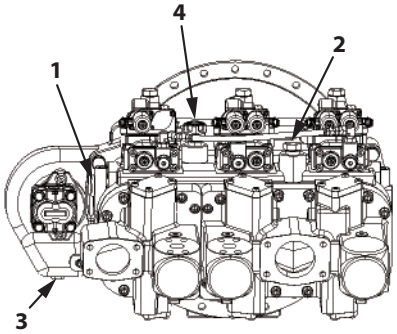

ZX300-7, 330-7 class

MDFY-07-047-2 ja

2 Swing Reduction Gear

Check Oil Level --- every 500 hours

1. Park the machine on a level surface.
2. Lower the bucket to the ground.
3. Turn the auto-idle switch off.

IMPORTANT

The turbocharger may be damaged if the engine is not properly shut down.

4. Run the engine at slow idle speed without load for 5 minutes.
5. Stop the engine. Remove the key from the key switch.
6. Set the pilot shut-off lever to the LOCK position.
7. Remove dipstick (1). Oil must be between marks (A).
8. If necessary, remove oil filler cap (2) and add oil. (See gear oil chart)
9. Recheck oil level.

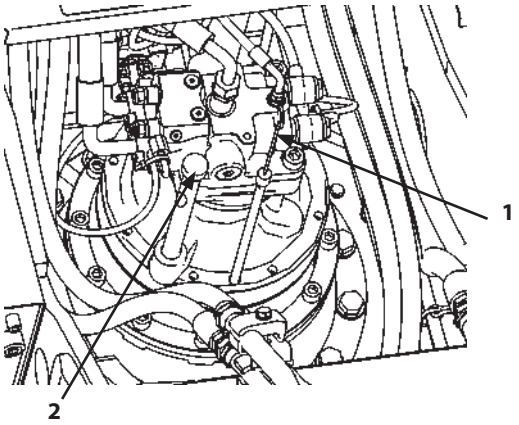

MDAA-07-003-1 ja

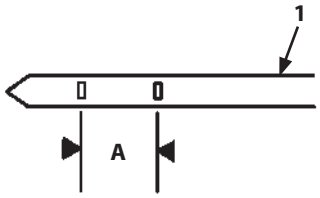

M104-07-017-2 ja

Change Gear Oil --- every 1000 hours

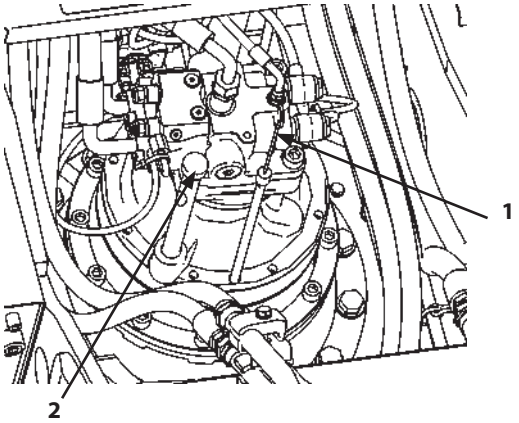

MDAA-07-003-1 ja

CAUTION

Gear oil may be hot just after operation. Wait for gear oil to cool before starting work.

1. Park the machine on a level surface.
2. Lower the bucket to the ground.
3. Turn the auto-idle switch off.

IMPORTANT

The turbocharger may be damaged if the engine is not properly shut down.

4. Run the engine at slow idle speed without load for five minutes.
5. Stop the engine. Remove the key from the key switch.
6. Set the pilot shut-off lever to the LOCK position.
7. Remove the drain plug mounted on the end of drain pipe to drain oil.

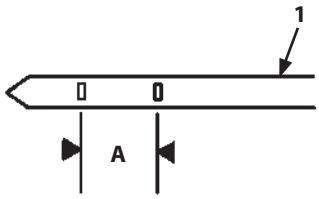

M104-07-017-2 ja

8. Reinstall the drain plug.
9. Remove oil filler cap (2) and add oil until it is between the marks (A) on dipstick (1).
10. Reinstall oil filler cap (2).

3 Gear Oil in Travel Device

Check Oil Level --- every 500 hours

WARNING

Keep body and face away from air release plug (1). Gear oil may be hot just after operation. Wait for gear oil to cool and then gradually loosen air release plug (1) to release pressure.

1. Park the machine on a level surface.
2. Rotate the travel motor until the imaginary line through plug (1) and plug (3) is vertical.
3. Lower the bucket to the ground.
4. Turn the auto-idle switch off.

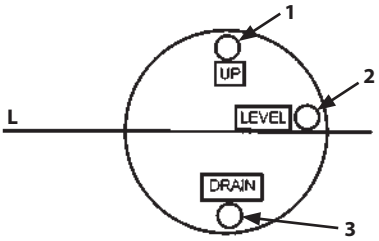

MDAA-07-047-2 ja

L	Horizontal Oil Level	2	Oil Level Check Plug
1	Air Bleed Plug (Oil Supply Plug)	3	Drain Plug

IMPORTANT

The turbocharger may be damaged if the engine is not properly shut down.

5. Run the engine at slow idle speed without load for 5 minutes.
6. Stop the engine. Remove the key from the key switch.
7. Set the pilot shut-off lever to the LOCK position.
8. After gear oil has cooled, slowly loosen air release plug (1) to release pressure.
9. Remove air release plug (1) and oil level check plug (2). The oil level must reach up to the bottom of the hole.

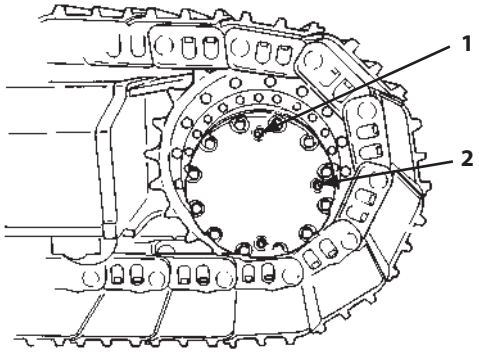

M157-07-170-1 ja

10. If necessary, add oil until oil flows out of oil level check plug (2) hole. (See gear oil chart)
11. Wrap the plug threads with sealing-type tape. Install plugs (1) and (2). Tighten plugs (1) and (2).

Tightening Torque

ZX120-7, 160-7, 180-7, 200-7, 240-7 class : 50 N·m (5 kgf·m)

ZX300-7, 330-7 class : 70 N·m (7 kgf·m)

12. Check the gear oil level in the other travel reduction gear.

Change Gear Oil --- every 2000 hours

1. Park the machine on a level surface.
2. Rotate the travel motor until the imaginary line through plug (1) and plug (3) is vertical.
3. Lower the bucket to the ground.
4. Turn the auto-idle switch off.

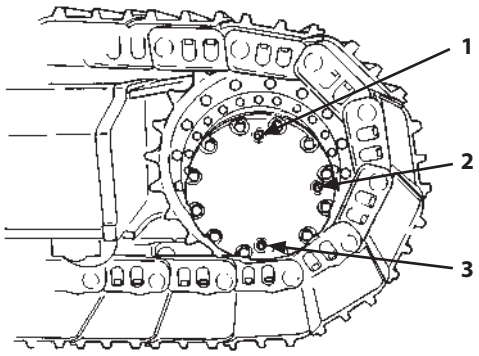

M157-07-170-2 ja

IMPORTANT

The turbocharger may be damaged if the engine is not properly shut down.

5. Run the engine at slow idle speed without load for 5 minutes.
6. Stop the engine. Remove the key from the key switch.
7. Set the pilot shut-off lever to the LOCK position.
8. After gear oil has cooled, slowly loosen air release plug (1) to release pressure, and temporarily retighten plug (1).
9. Remove drain plug (3) and plug (1), in that order, to drain oil.
10. Clean drain plug (3). Wrap the threads of drain plug (3) with sealing-type tape. Install plug (3). Tighten plug (3).

    Tightening Torque
    ZX120-7, 160-7, 180-7, 200-7, 240-7 class : 50 N·m (5 kgf·m)
    ZX300-7, 330-7 class : 70 N·m (7 kgf·m)
11. Remove oil level check plug (2).
12. Add oil until oil flows out of oil level check plug (2) hole. (See gear oil chart)
13. Clean plugs (1) and (2). Wrap the threads of oil level check plug (2) and air release plug (1) with sealing-type tape. Reinstall the plugs (1) and (2). Tighten the plugs (1) and (2).

    Tightening Torque
    ZX120-7, 160-7, 180-7, 200-7, 240-7 class : 50 N·m (5 kgf·m)
    ZX300-7, 330-7 class : 70 N·m (7 kgf·m)
14. Repeat steps 8. to 13. for the other travel reduction gear.

D. Hydraulic System

Inspection and Maintenance of Hydraulic Equipment

IMPORTANT

Never disassemble parts of the engine fuel system or adjust hydraulic equipment.

⚠ CAUTION

When checking and/or servicing the hydraulic components, pay special attention to the following points.

1. Park the machine according to the instructions in Preparations for Inspection and Maintenance (7-8).
2. Prior to inspecting or servicing the hydraulic system, relieve the residual pressure and allow the parts to cool.
   a. Release the residual pressure in the various lines, such as the boom, arm and bucket cylinder circuits, swing lines, pilot system lines, etc. This machine is equipped with an accumulator to allow the front attachment to be moved for certain period after the engine stops. The pressure in the accumulator will gradually decreases after the engine stop and be released.
   b. Air bleed the hydraulic oil tank.
   c. Immediately after operation, all hydraulic components and hydraulic oil or lubricants are hot and highly pressurized. Begin inspection and/or maintenance work only after the machine has cooled down.
   Servicing heated and pressurized hydraulic components may cause plugs, screws and/or oil to fly off or escape suddenly, possibly resulting in personal injury. Hydraulic components may be pressurized even when cooled. Keep body parts and face away from the front of plugs or screws when removing them.
   d. Even after air pressure in the hydraulic oil tank is released, when the machine is parking on a slope, the oil pressure in the travel motor and the swing motor circuits are maintained at high pressure as the reaction force of the machine's own weight is constantly applied to the travel motor. Never check and/or service the machine while parked on a slope.

IMPORTANT

- **When connecting hydraulic hoses and pipes, take special care to keep seal surfaces free from dirt and to avoid damaging them.**
- **Wash hoses, pipes, and the tank interior with a washing liquid and thoroughly wipe off before reconnecting.**
- **Only use O-rings that are free of damage or defects. Be careful not to damage them during reassembly. Do not allow high pressure hoses to twist when connecting them. The life of twisted hoses will be shortened considerably.**
- **Do not use hydraulic oils other than those listed in the table "Brand names of recommended hydraulic oil".**
- **When adding hydraulic oil, always use the same brand of oil; do not mix brands of oil. When using another manufacturer's hydraulic oil, be sure to change the full amount.**
- **The new machine is filled with Hitachi Genuine Hydraulic oil 5000 (change interval: every 5000 hours). When adding or changing the hydraulic oil, continue to use Hitachi Genuine Hydraulic oil 5000.**
- **Never run the engine without oil in the hydraulic oil tank.**

Change Hydraulic Oil and Replace Full-Flow Filter Element

Hydraulic breaker operation causes the hydraulic system to become contaminated faster and quickly degrades the hydraulic oil.

Failure to adhere to proper maintenance intervals may result in damage to the machine and the breaker.

In order to extend service life, particularly that of the hydraulic pump, change the hydraulic oil and the full-flow filter element at the intervals specified below.

Check machine service hours by using the breaker hour meter. (Confirm breaker operation ratio with reference to Operating Information in chapter 1 “OPERATOR'S STATION”)

Change/replacement intervals (hours) for high performance elements (micro-glass)

Breaker operation ratio	0%	10%	20%	30%	40%	50%	60%	70%	80%	90%	100%
Full-Flow Filter	1000	670	510	410	340	290	250	230	200	190	170
2000 Hour Hydraulic Oil	2000	1590	1320	1130	990	880	790	710	650	600	560
5000 Hour Hydraulic Oil	5000	2790	1930	1480	1200	1010	870	760	680	610	560

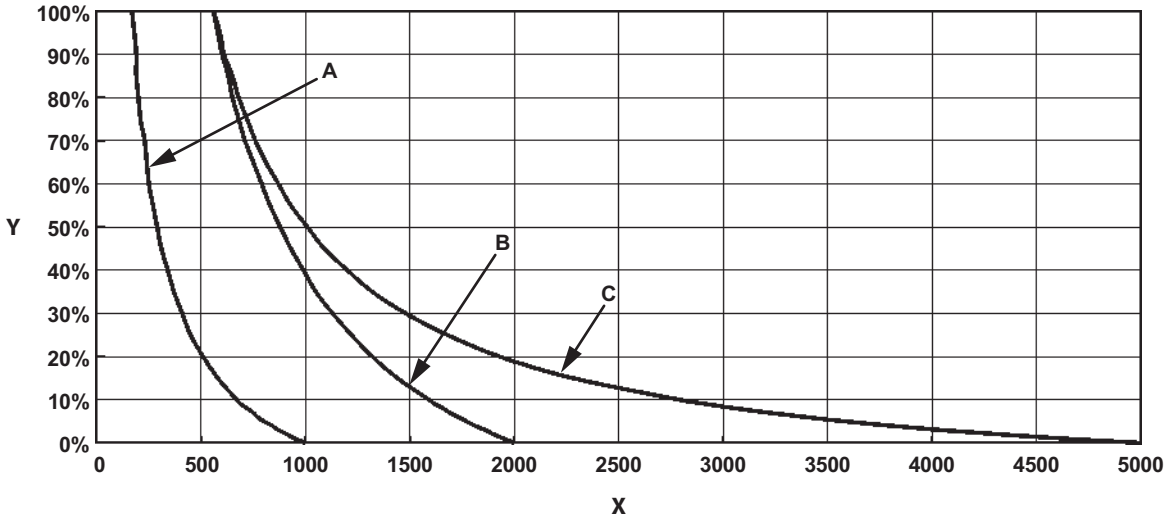

MDFY-07-098-1 ja

A Element Replacement Interval

B Change interval for 2000-hour hydraulic oil

C Change interval for 5000-hour hydraulic oil

X Change Interval (Hours)

Y Average breaker operation ratio(%)

1 Check Hydraulic Oil Level

--- daily

CAUTION

The hydraulic oil tank is pressurized. Push the pressure release button on the tank cap to release pressure, and carefully remove the cap.

IMPORTANT

Never run the engine without oil in hydraulic oil tank.

1. Park the machine on a level surface.

M104-07-021 ja

2. Position the machine with the arm cylinder fully retracted and the bucket cylinder fully extended.
3. Lower the bucket to the ground.
4. Turn the auto-idle switch off.

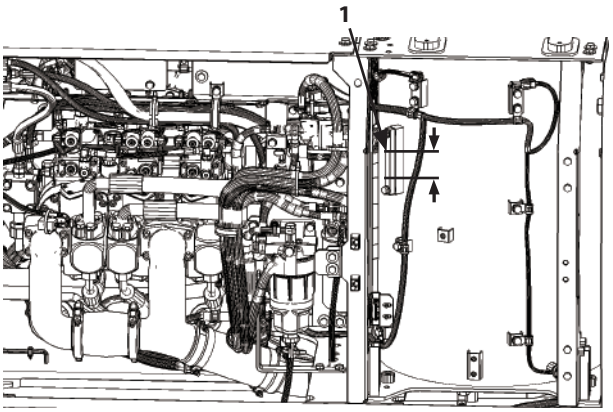

MDFY-07-012-1 ja

IMPORTANT

The turbocharger may be damaged if the engine is not properly shut down.

5. Run the engine at slow idle speed without load for 5 minutes.
6. Turn the key switch OFF. Remove the key from the key switch.
7. Set the pilot shut-off lever to the LOCK position.
8. Open the access door in front of the main pump. Check oil level with level gauge (1) on hydraulic oil tank. Oil must be between marks on gauge (1). If necessary, add oil.

To add oil:

9. Push the pressure release button on the air breather to release pressure. Remove the cover.
10. Add oil. Recheck oil level with level gauge (1).
11. Install the cover. Make sure the filter and rod assembly are in correct position.

2 Change Hydraulic Oil

--- every 2000 hours or 5000 hours

CAUTION

- **Hydraulic oil may be hot just after operation. Wait for oil to cool before starting work.**
- **The hydraulic oil tank is pressurized. Push pressure release button (1) on the air breather before removing the air breather.**

IMPORTANT

Hydraulic oil changing intervals differ according to kind of hydraulic oils used and attachment operating availability. (See Recommended Oil Chart in this group)

1. Park the machine on a level surface with the upperstructure rotated 90° for easier access.

M104-07-117 ja

2. Position the machine with the arm cylinder fully retracted and the bucket cylinder fully extended.
3. Lower the bucket to the ground.
4. Turn the auto-idle switch off.

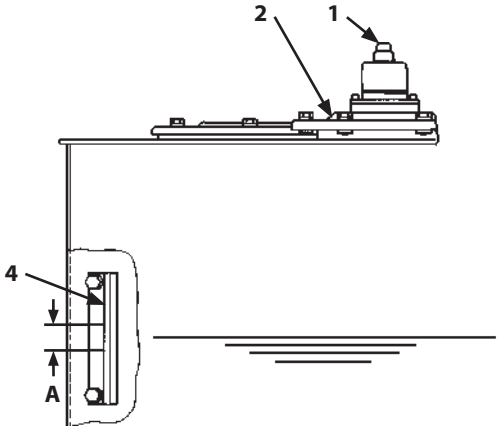

M157-07-016-2 ja

IMPORTANT

The turbocharger may be damaged if the engine is not properly shut down.

5. Run the engine at slow idle speed without load for 5 minutes.
6. Stop the engine. Remove the key from the key switch.
7. Set the pilot shut-off lever to the LOCK position.
8. Clean the top of the hydraulic oil tank to keep dirt out of the hydraulic system.
9. Push pressure release button (1) on the air breather.
10. Remove cover (2).

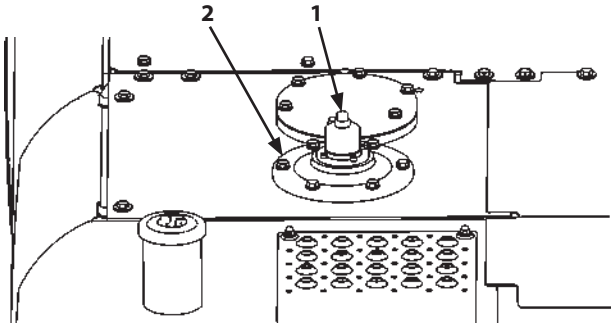

MDAA-07-037-1 ja

11. Remove oil using a suction pump. The hydraulic oil tank capacity, up to the specified oil level, is approximately the value shown in column A below.

Model	A
ZX120-7 class	82 L
ZX160-7, 180-7 class	125 L
ZX210LC-7	135 L
ZX210LCN-7, 240N-7	122 L
ZX240-7 class	156 L
ZX300-7 class	163 L
ZX330-7 class	198 L

12. Remove drain plug (3). Allow oil to drain.
13. Clean, install and tighten drain plug (3).
14. Add oil until it is between the marks (A) on the oil level gauge (4).
15. Install cover (2). Tighten the bolts to 50 N·m (5 kgf·m).

IMPORTANT

Take care when changing the hydraulic oil that nothing, such as water or sand, gets inside the tank.

16. Be sure to bleed air from the system following the procedures shown on the next page.

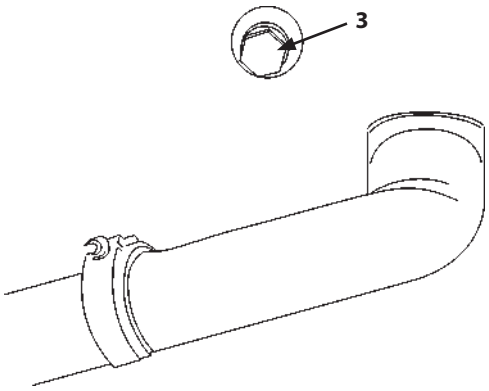

M1U1-07-047-1 ja

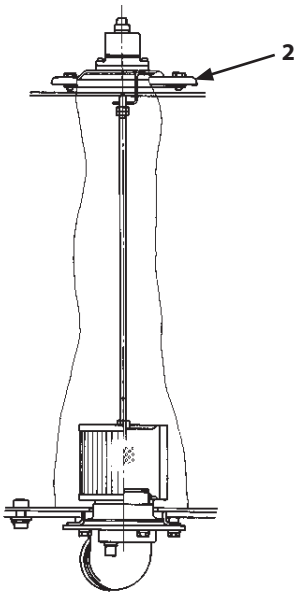

M157-07-062-2 ja

Sampling the Hydraulic Oil

NOTE

The low-pressure line is equipped with a valve (5) for sampling the hydraulic oil. The valve has a cap (4). For instructions on sampling the hydraulic oil, contact your authorized dealer.

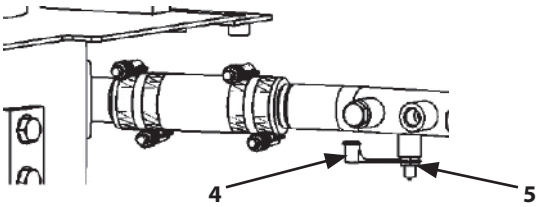

MDC1-07-115-1 ja

Bleed Air from Hydraulic System

After changing hydraulic oil, bleed air from the hydraulic system by following the procedures below.

IMPORTANT

If the hydraulic pump is not filled with oil, it will be damaged when the engine is started. The bleeding of air should be conducted on a regular basis.

Bleeding Air from the Hydraulic Pump

1. Remove air bleed plug (4) on each pump and fill with hydraulic oil.
2. After hydraulic oil is filled in the pump, provisionally tighten plug (4). Start the engine and run it at slow idle speed.
3. Slightly loosen one of plugs (4). Allow air to bleed from the pump through the clearance until hydraulic oil comes out from around plug (4).
4. After bleeding air, tighten plug (4) to specification. Tightening Torque: 95 N·m (9.5 kgf·m)
5. Repeat Steps 3 and 4 for the remainder of plugs (4).

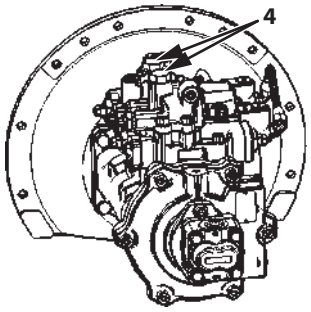

ZX120-7 class

MDFY-07-118-1 ja

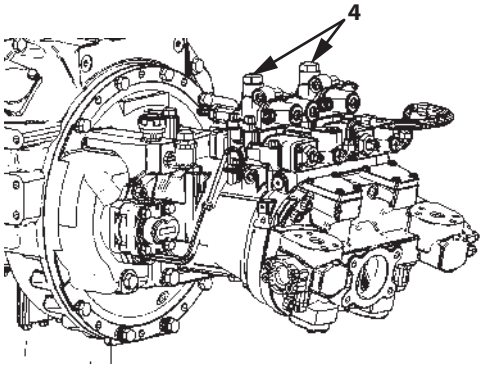

ZX160-7, 180-7 class

MDFY-01-158-1 ja

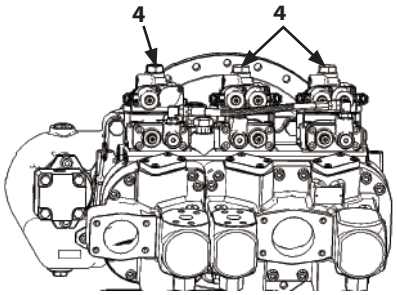

ZX200-7, 240-7 class

MDFY-07-148-2 ja

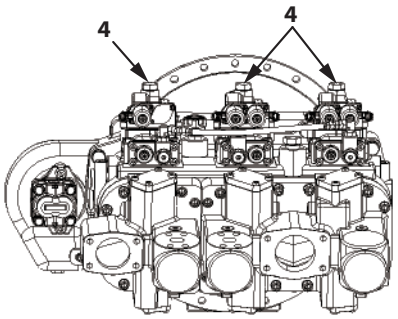

ZX300-7, 330-7 class

MDFY-07-047-1 ja

Bleeding Air from the Hydraulic Circuit

1. After filling hydraulic oil, start the engine. While moving all cylinders and the swing motor evenly, lightly operate the machine for 10 to 15 minutes.
   As the air bleeding device is provided in the pilot circuit, air will be released by conducting the above operation for 5 minutes.
2. Lower the bucket to the ground to return to the position to check hydraulic oil level.
3. Stop the engine. Check the oil level and add if as needed.

3 Suction Filter Cleaning

---each time hydraulic oil is changed

The suction filter is located on the bottom of the hydraulic oil tank.

Clean the suction filter when changing hydraulic oil.

1. After removing hydraulic oil from the hydraulic oil tank, remove cover (1) and rod assembly (2).
2. Clean the inside of the hydraulic oil tank and the suction filter.
3. Before installing the suction filter, check the dimensions of the rod assembly as illustrated at right. Securely insert the rod assembly into pipe (3).
4. Before securing cover (1) with bolts, ensure the top edge of the rod assembly (2) is completely inserted into the hole of support (4).
5. Bleed air from the hydraulic system.
   (Refer to Bleed Air from Hydraulic Systemof 2.)

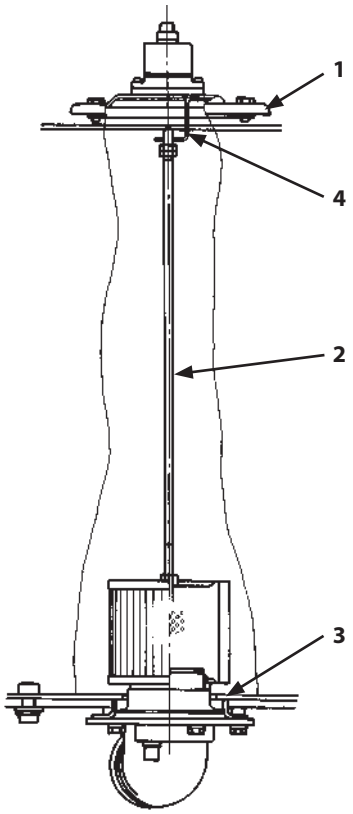

M157-07-062-1 ja

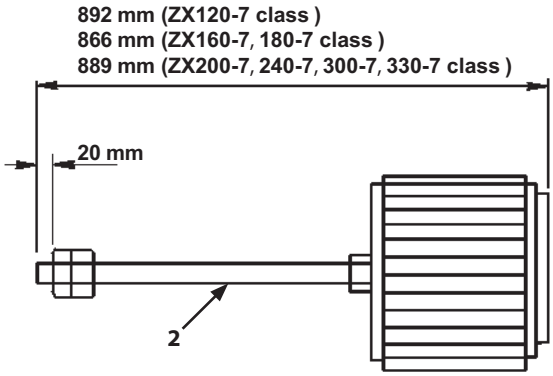

Rod Assembly

M107-07-070-3 en_GB

4 Replace Full-Flow Filter

--- every 1000 hours

CAUTION

Hydraulic oil becomes hot and is under pressure during operation. Severe burns may result if skin comes in contact with escaping hydraulic oil just after operation.
Wait for the oil to cool before starting any maintenance work.

Replacement Guide

1. Park the machine according to the instructions of (7-8) Preparations for Inspection and Maintenance.

M1CC-07-002 ja

IMPORTANT

If an engine equipped with a turbocharger is stopped without first performing the cool down operation, the lubricant on the turbocharger bearing surfaces may dry out due to the intense heat inside the turbocharger, possibly causing damage to the turbocharger.

2. Before replacing element (5), be sure to bleed air from the hydraulic oil tank by pressing the air bleed valve on the hydraulic oil tank.
3. Loosen bolts (1) (6 used) to remove cover (2) and O-ring (3). When removing cover (2), slowly remove it while pressing it downward so that spring (4) does not fly off.
4. Remove spring (4), and element (5).
5. Take extra care not to allow water or dust to enter the filter case.
6. Replace O-ring (3) and element (5) with new ones. Be careful not to damage element (5) and O-ring (3). Broken element (5) is unusable.
7. Install cover (2) with the 6 bolts (1).

   Tightening torque: 50 N·m (5 kgf·m)

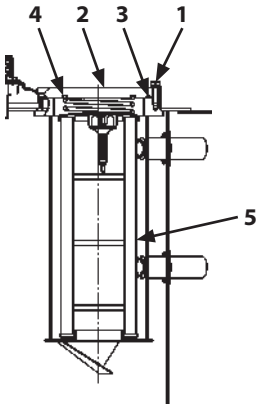

MDEQ-07-032-1 ja

8. After replacing the element, bleed air from the pump and check the oil level in the hydraulic oil tank. (Refer to Air bleeding procedures (7-74).)
   If the machine is operated with air mixed in the hydraulic circuit, damage to the pump may result.

NOTE

Replace element (5) at the regular interval to keep hydraulic oil clean and extend the service life of the hydraulic components.

5 Replace Pilot Oil Filter

--- every 1000 hours

CAUTION

The hydraulic oil tank is pressurized. Push the pressure release button on the air breather before replacing the pilot oil filter.

1. Park the machine on a level surface.
2. Lower the bucket to the ground.
3. Turn the auto-idle switch off.

M104-07-021 ja

IMPORTANT

The turbocharger may be damaged if the engine is not properly shut down.

4. Run the engine at slow idle speed without load for 5 minutes.
5. Stop the engine. Remove the key from the key switch.
6. Set the pilot shut-off lever to the LOCK position.

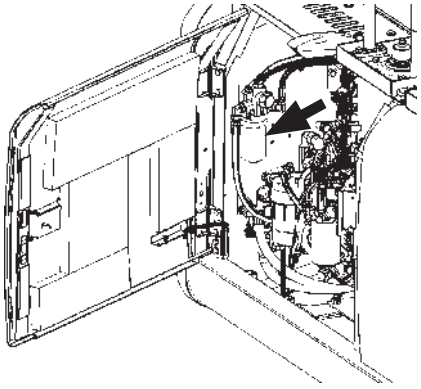

ZX120-7 class

MDFY-07-114-2 ja

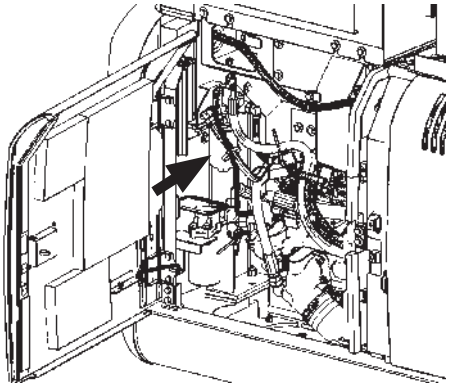

ZX160-7, 180-7 class

MDFY-01-138-1 ja

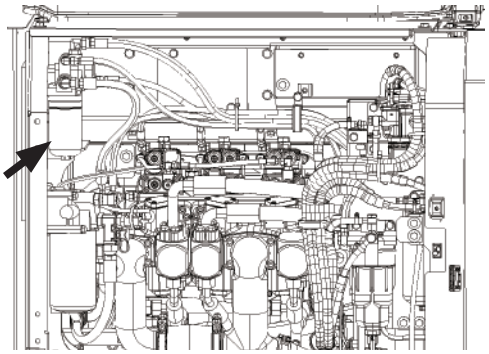

ZX200-7, 240-7 class

MDFY-07-062-1 ja

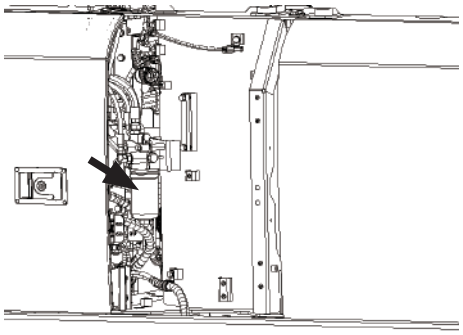

ZX300-7, 330-7 class

MDFY-07-048-1 ja

7. Remove pilot oil filter (2) by turning it counterclockwise with the filter wrench.
8. Clean the filter O-ring contact area on filter head (1).
9. Apply a thin film of clean oil to the gasket of new filter (2).
10. Install new filter (2). Turn filter (2) clockwise by hand until the O-ring touches the contact area. Be sure not to damage the O-ring when installing filter (2).

IMPORTANT

Do not re-use pilot oil filter (2).

11. After replacing the element, bleed air from the pump and check the oil level in the hydraulic oil tank.
    (Refer to 2, "Bleed Air from Hydraulic System")
    If the machine is operated with air mixed in the hydraulic circuit, damage to the pump may result.

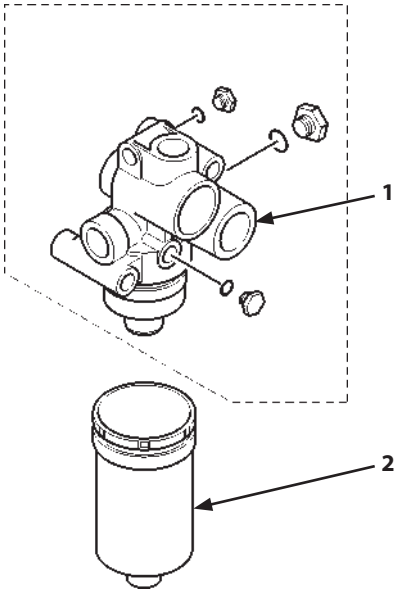

M1U1-07-050-1 ja

12. Replace filter (2) at regular intervals to keep the hydraulic oil clean and to extend the service life of the hydraulic components.

6 Replace Air Breather Element

--- every 5000 hours

CAUTION

Hydraulic oil becomes hot and is under pressure during operation. Severe burns may result if skin comes in contact with escaping hydraulic oil just after operation. Wait for the oil to cool before starting any maintenance work.

Replacement Guide

1. Park the machine according to the instructions in Preparations for Inspection and Maintenance (7-8). Lower the bucket to the ground with the bucket cylinder extended and the arm cylinder crowded so the machine is in the position shown in the figure.

M1CC-07-002 ja

2. Before replacing element (3), be sure to bleed air pressure from the hydraulic oil tank by pushing release button on the hydraulic oil tank.

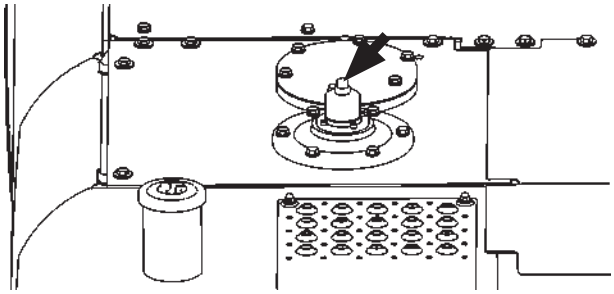

MDAA-07-037-2 ja

3. Turn cover (2) clockwise approx. 1/4 turn. Remove cap (1) by turning it counterclockwise.
4. Turn cover (2) counterclockwise and remove it. Remove element (3).
5. Install new element (3). Tighten to install cover (2) until it comes in contact with element (3). Then, further tighten it 1/4 turn.
6. Securely tighten cap (1) clockwise by hand. While holding cap (1) by hand so that cap (1) does not turn, securely tighten cover (2) by turning counterclockwise 5 to 10 ° by hand.
7. Take care never to allow water and/or contaminant to stay between cover (2) and body (4) (air breathing port).

NOTE

Replace element (3) at the regular interval to keep hydraulic oil clean and to extend the service life of the hydraulic components.

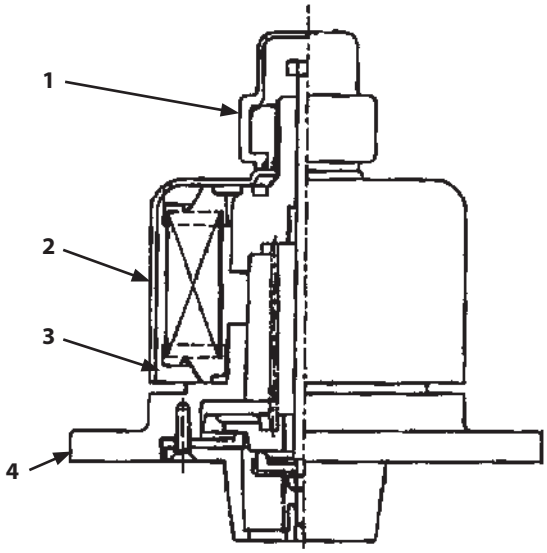

M1G6-07-001-1 ja

7 Check Hoses and Lines

...daily

--- every 250 hours

WARNING

- **Hydraulic oil and lubricant leaks can lead to fire that may result in serious injury. Check for missing or loose clamps, kinked hoses, lines or hoses that rub against each other, oil cooler damage and loose oil cooler flange bolts, and check for leaks.**
- **Escaping oil under pressure can penetrate the skin causing serious injury. To avoid this hazard, use a piece of cardboard when searching for oil leaks. Take care to protect hands and body from high-pressure fluids. If oil penetrates your skin, immediately get treatment from a doctor familiar with how to treat such an injury.**
- **Tighten, repair or replace any missing, loose or damaged clamps, hoses and lines.**
- **Do not bend or strike high-pressure lines.**
- **Never install bent or damaged hoses or lines.**

SA-031 ja

Referring to the check points shown below, check the hoses and lines for oil leaks and damage.

If any abnormality is found, replace or retighten as instructed in the table.

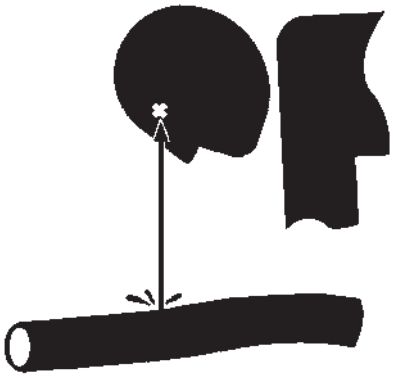

SA-292 ja

SA-044 ja

Hose

Interval (Hours)	Check Points	Check For	Remedies	
Daily	Hose covers	Leak (1)	Replace	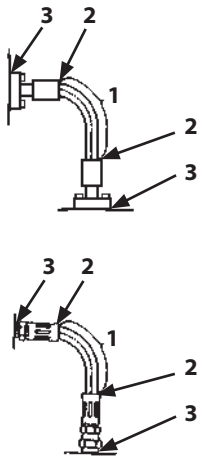
	Hose ends	Leak (2)	Replace	
	Fittings	Leak (3)	Retighten or replace hose or O-ring	
Every 250 hours	Hose covers	Damage or leak (4)	Replace	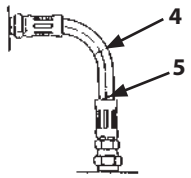
	Hose ends	Damage or leak (5)	Replace	
	Hose covers	Exposed reinforcement (6)	Replace	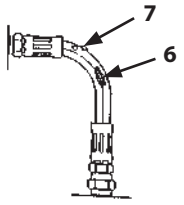
	Hose covers	Crack or blister (7)	Replace	
	Hose	Bend (8), Collapse (9)	Replace	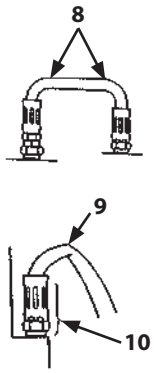
	Hose ends and fittings	Deformation or corrosion (10)	Replace	

Lines

Interval (Hours)	Check Points	Check For	Remedies	
Daily	Contact surfaces of flange joints	Leak (11)	Replace	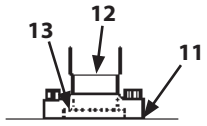
	Bolts	Loose or leak (11)	Retighten or replace O-ring	
	Welded surfaces on flange joints	Leak (12)	Replace	

Interval (Hours)	Check Points	Check For	Remedies	
Every 250 hours	Flange joint neck	Crack (13)	Replace	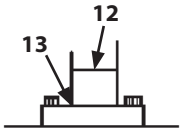
	Welded surfaces on flange joints	Crack (12)	Replace	
	Clamps	Missing, deformed or loose	Replace or re-tighten	

Hose and Lines

Interval (Hours)	Check Points	Check For	Remedies	
Daily	Flexible master coupling	Leak (14)	Replace or re-tighten	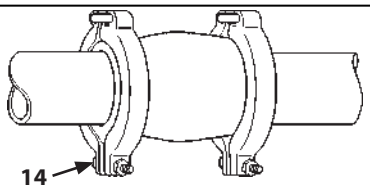
Every 250 hours	Constant torque clamp	Leak (15)	Replace or re-tighten	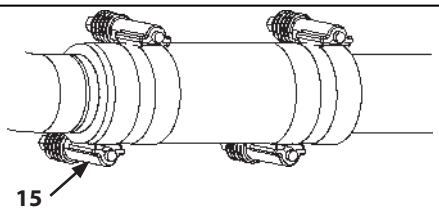

Oil Cooler

Interval (Hours)	Check Points	Check For	Remedies	
Every 250 hours	Oil Cooler	Leak (16)	Replace	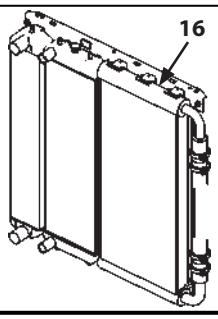

Types of Hydraulic Fittings

Two hydraulic fitting designs are used on this machine.

- Flat Face O-ring Seal Fitting (ORS Fitting)
  O-ring (1) is used on the sealing surfaces of adapter (2) to prevent oil leakage.

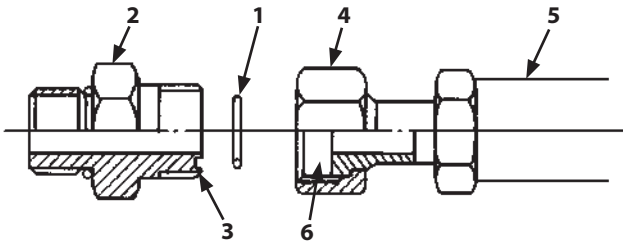

Flat Face O-ring Seal Fitting (ORS Fitting)

M104-07-033-1 ja

Precautions for Use

1. Replace O-ring (1) with a new one when assembling fittings.
2. Check that O-ring (1) is properly fitted in O-ring groove (3). Tighten union (4).
   Tightening union (4) with O-ring (1) out of the groove may damage O-ring (1) and cause an oil leak.
3. When assembling fittings, take care not to make a dent on O-ring groove (3) of adapter (2) and sealing surface (6) on hose (5) or the side of the valve. If these surfaces are scratched, it may result in damage to O-ring (1) and lead to an oil leak.
4. If oil leaks from a loose connection of union (4), do not tighten the fitting. Open the connection, replace O-ring (1) with a new one. Before tightening, check that O-ring (1) is correctly located in O-ring groove (3).

Tightening Torque

Tighten fittings to the torque values shown below.

Wrench size (mm)		27	32	36	41, 46
Tightening torque ±10%	N·m	95	140	180	210
	(kgf·m)	(9.5)	(14)	(18)	(21)

- Metal Face Seal Fittings
  Tight contact between metal flares on adaptor (7) and metal connector (8) of hose (5) prevents pressure oil leakage. This type of fitting is used on smaller diameter joints.

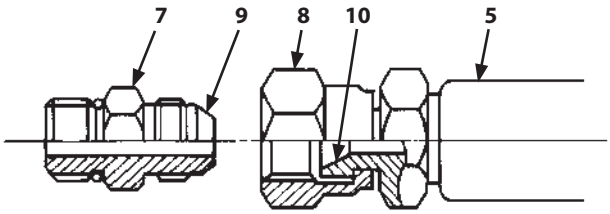

Metal Face Seal Fittings

M202-07-051-1 ja

Precautions for Use

Connect or disconnect fittings with care not to damage seat surfaces (9 and 10).

Tightening Torque

Tighten fittings to the torque values shown below.

Wrench size (mm)		17	19	22	27
Tightening torque ±10%	N·m	25	30	40	80
	(kgf·m)	(2.5)	(3)	(4)	(8)

- Bent tube
  Tighten bent tube (11) mounted on the control valve to the torque value shown below.

Wrench size (mm)		17
Tightening Torque	N·m	35
	(kgf·m)	(3.5)

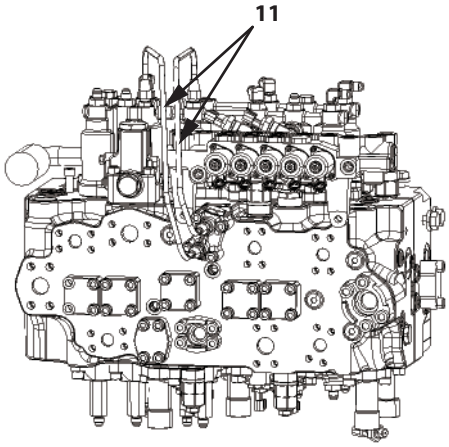

Control valve

MDFY-07-027-2 ja

E. Fuel System

CAUTION

Beware of fire. Fuel is flammable. Keep fuel away from fire hazards.

Recommended Fuel

Use only super high quality or high quality DIESEL FUEL (JIS K-2204) (ASTM D-975) (EN-590). Kerosene must NOT be used. Using poor quality fuel, drainage agents, fuel additives, gasoline, kerosene or alcohol for refueling or mixed with specified fuel may degrade the performance of the fuel filters and cause sliding problem at lubricated contacts in the injector. It also affects the engine parts, leading to malfunction. Using fuel other than ultra low-sulfur or low-sulfur diesel fuel has adverse effects on the engine and the aftertreatment device, and may result in malfunction.

Refueling

1. Park the machine on a firm, level surface. Lower the bucket to the ground. Check the fuel level with fuel gauge (1).
   If the fuel level is low, stop the engine. Refuel by removing cap (2) on the fuel tank.
2. Remove cap (2) of filler port.
   [Cap unlock procedures]
   - Release the key lock.
   - Pull up handle (3) and turn it counterclockwise to release cap lock.
   - Remove cap (2).
3. To avoid condensation, fill the tank at the end of each day's operation. Fuel tank capacity is as follows.
   Do not fill the tank more than needed. Use the float on level gauge (4) to check the level.
   Stop filling when red mark (5) on the float becomes visible.
   Position the oil filler gun so that the gun will not obstruct the floating movement of level gauge (4).

Model	Fuel Tank Capacity
ZX120-7, 160-7, 180-7 class	285 L
ZX210LC-7	400 L
ZX210LCN-7, 240N-7	300 L
ZX240-7, 300-7 class	510 L
ZX330-7 class	630 L

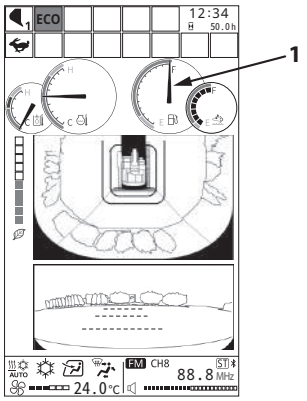

MDFY-MT-100-8 ja

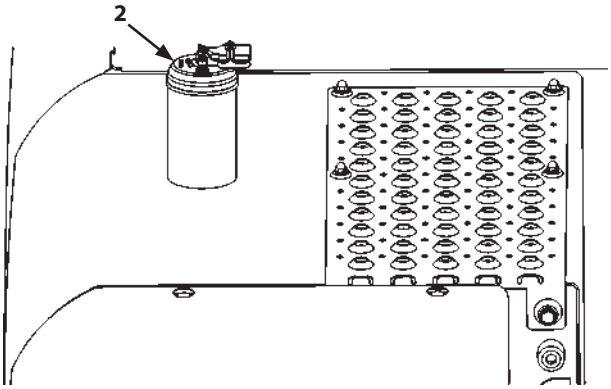

MDCF-07-032-1 ja

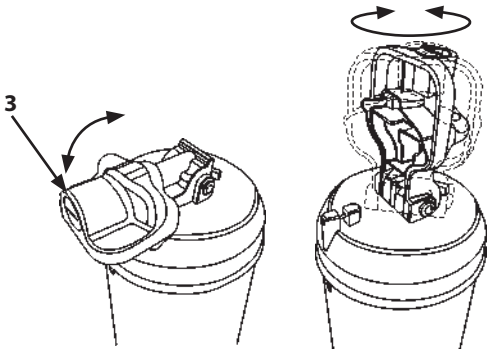

MLBA-07-093-MLBA-07-095 ja

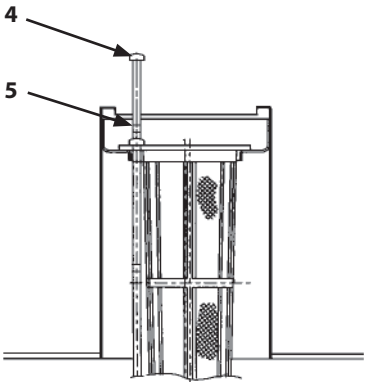

MDFY-07-001-1 ja

4. Just after fueling, install and lock filler cap (2) on top of the fuel tank to prevent vandalism and loss.
5. Install cap (2) of filler port.
   [Cap lock procedures]
   - Install cap (2).
   - Turn handle (3) clockwise to the lock position, and then push down handle.
   - Lock the key.

IMPORTANT

- **When refueling, ensure that no dirt, water or other impurities get into the fuel line.**
- **Wipe up any spilled fuel.**
- **If equipped with an auto fuel filling device, remove filler cap (2) and monitor the float of level gauge (4) while fueling.**

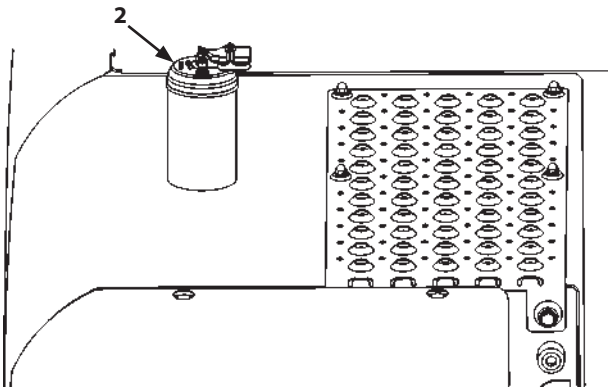

MDCF-07-032-1 ja

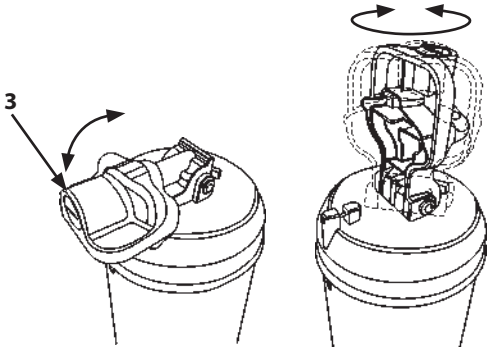

MLBA-07-093-MLBA-07-095 ja

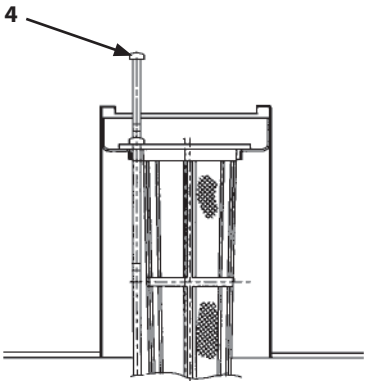

MDFY-07-001-2 ja

1 Drain Fuel Tank Sump

--- daily

1. Park the machine on a level surface with the upperstructure rotated 90 ° for easier access.
2. Lower the bucket to the ground.
3. Turn the auto-idle switch off.

M104-07-117 ja

IMPORTANT

The turbocharger may be damaged if the engine is not properly shut down.

4. Run the engine at slow idle speed without load for 5 minutes.
5. Turn the key switch OFF. Remove the key from the key switch.
6. Set the pilot shut-off lever to the LOCK position.
7. Place 0.5 liters or larger capacity container under drain hose (2) to collect the drained water.
8. Open drain valve (1) to drain water and/or sediment through drain hose (2).
9. After draining water, securely tighten drain valve (1).

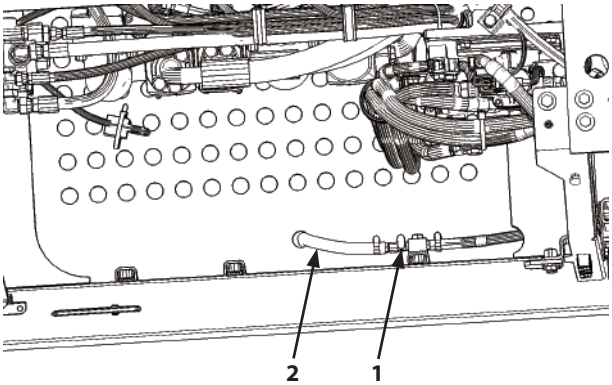

MDFY-07-013-1 ja

2 Drain Fuel Pre-Filter

---daily

IMPORTANT

Drain fuel pre-filter daily before starting operation. The engine may be damaged if you do not drain it daily.

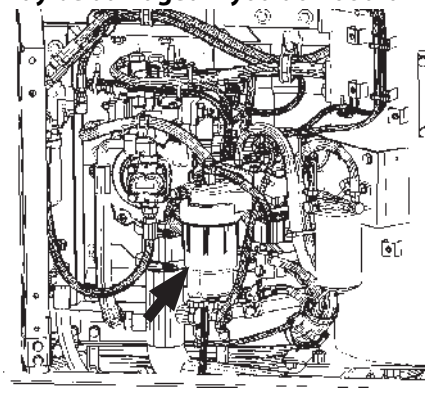

ZX120-7 class

MDFY-07-120-1 ja

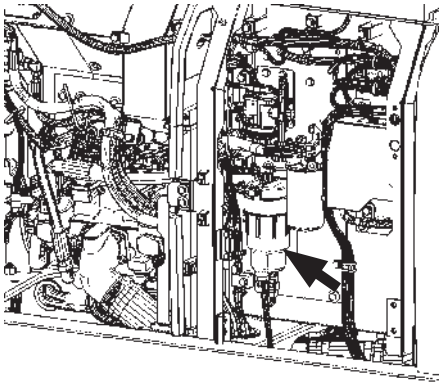

ZX160-7, 180-7 class

MDFY-01-141-1 ja

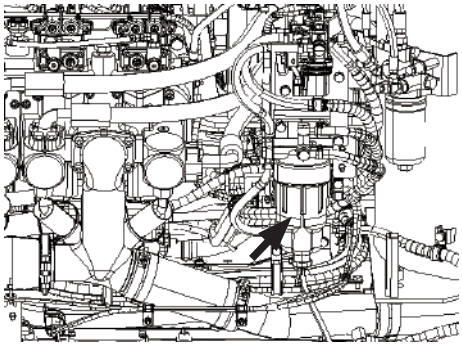

ZX300-7, 330-7 class

MDFY-07-049-1 ja

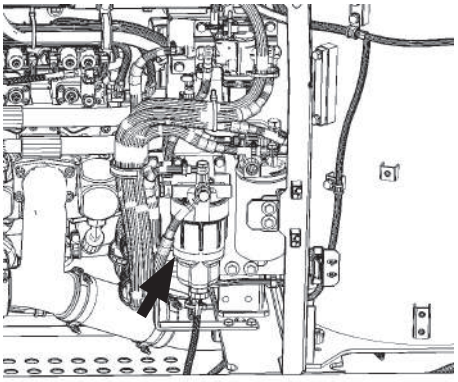

ZX200-7, 240-7 class

MDFY-07-141-1 ja

The fuel pre-filter has a water separator function. There is a float (8) inside the case which floats when water accumulates.

Check float (8) position during daily pre-work inspection. Drain water until float (8) goes to the bottom of the pre-filter case.

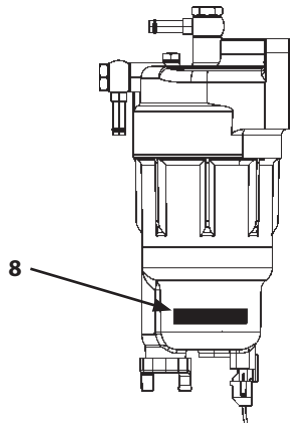

MDC1-07-092-1-1 ja

Drain Procedure

1. Place 0.5 liter or larger capacity container under drain hose (6).
2. Rotate drain plug (5) on the bottom of the pre-filter case counterclockwise. Drain the water accumulated in the pre-filter until float (8) goes to the bottom of the pre-filter case.
3. After draining the water, securely tighten drain plug (5).
4. Start the engine and then check drain plug (5) for fuel leaks.

IMPORTANT

After draining water mixed in the fuel filter, bleed air from the fuel supply system.

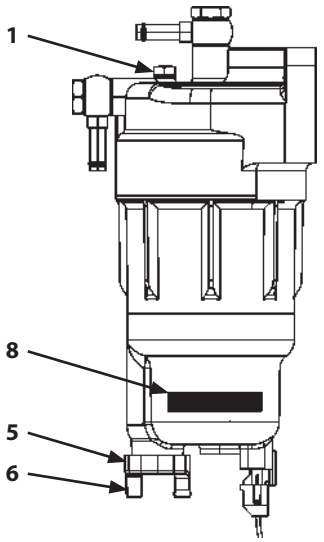

Fuel Pre Filter

MDC1-07-092-1-2 ja

Bleeding Air from the Fuel System

Air in the fuel system may make the engine hard to start or run irregularly.

If the fuel tank has run dry, and after operations such as draining water from the fuel filter or replacing the fuel element, be sure to bleed air from the fuel system.

Bleeding Air

This machine is equipped with an electric fuel pump.

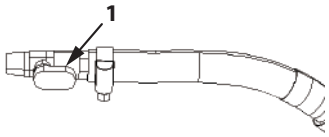

Fuel Cock Open Position

MDFY-07-054-1 ja

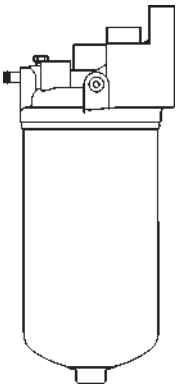

Fuel Main Filter

MDC1-07-047-1-1 ja

CAUTION

Fuel leaks may lead to fires.

1. Check that fuel cock (1) in the pump chamber has opened.
2. Turn the key switch ON and hold it in that position for approx. 3 minutes. This operates the electric fuel pump and starts bleeding air.
3. Start the engine. Check the fuel supply system for fuel leaks.

IMPORTANT

Even if air is not thoroughly bled, do not hold the key switch in the ON position for more than 5 minutes. If air fails to bleed completely, first return the key switch to the OFF position. After at least 30 seconds, turn the key switch ON again. Failure to do so may cause damage to the electric fuel pump and/or discharging the batteries.

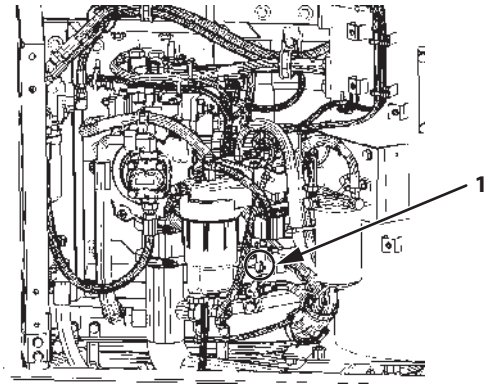

ZX120-7 class

MDFY-07-120-2 ja

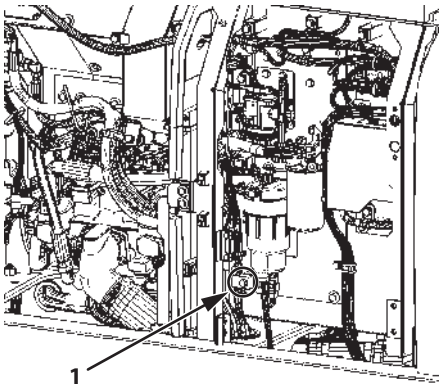

ZX160-7, 180-7 class

MDFY-01-141-2 ja

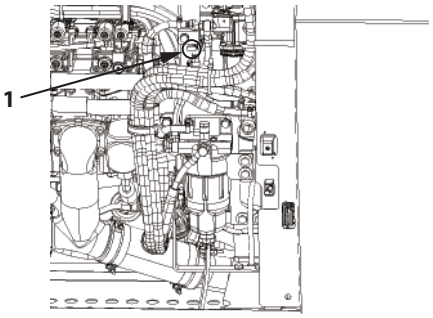

ZX200-7, 240-7 class

MDFY-07-055-1 ja

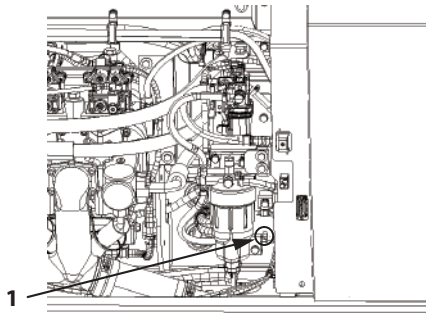

ZX300-7, 330-7 class

MDFY-07-056-1 ja

If Air Mixed Downstream of Common Rail

If air becomes mixed into the fuel system due to lack of fuel and the engine is difficult to start, release air by following the procedure below.

1. Following the above mentioned procedures, bleed enough air up to the engine supply pump entrance.
2. Operate starter motor for long cranking within 20 seconds. If engine falls to start, return key switch to OFF. Wait more than about 60 seconds, and then try again.

3 Replace Fuel Main Filter Element

---every 1000 hours

IMPORTANT

- **Be sure to use only genuine Hitachi elements for the fuel main filter element and the pre-filter element. Using a different element may adversely affect engine performance and/or shorten the engine service life. Note: any engine failure caused by using other manufacturers' elements is excluded from the Hitachi Warranty Policy.**
- **Take care not to allow dirt and/or water to enter the fuel tank.**

The fuel main filter is located as shown at right.

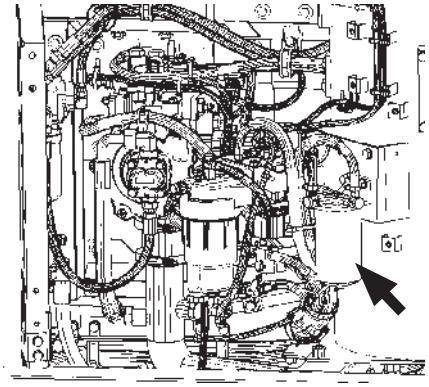

ZX120-7 class

MDFY-07-120-4 ja

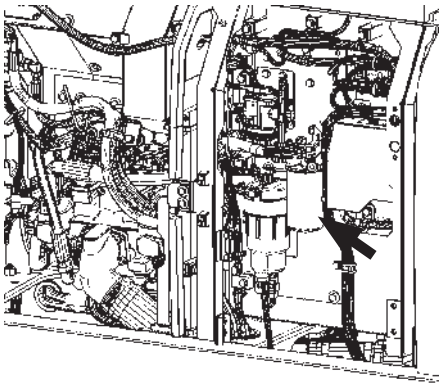

ZX160-7, 180-7 class

MDFY-01-141-4 ja

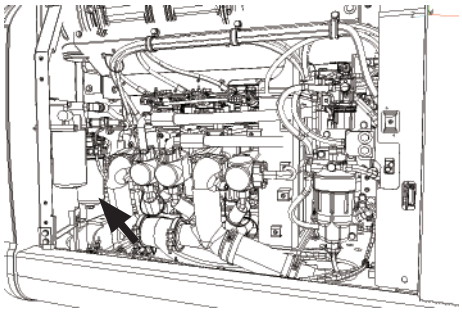

ZX300-7, 330-7 class

MDFY-07-050-1 ja

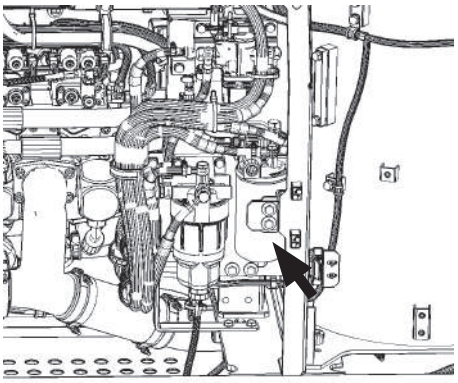

ZX200-7, 240-7 class

MDFY-07-141-2 ja

Replacement Guide

ZX120-7, 160-7, 180-7 class

1. Close cock (4).
2. Place a 1 liter or larger container under the fuel main filter.
3. Rotate the bottom of filter element (5) counterclockwise with the special tool and remove filter element (5) from head cover (6).
4. Install new filter element (5) on head cover (6) while rotating filter element clockwise. Tighten to torque 16±4 N·m (1.6±0.4 kgf·m).
5. Open cock (4).
6. Bleeding Air from the Fuel System
   After replacing fuel filter element (5), bleed air from the fuel supply system.
   (Refer to Bleeding Air from the Fuel System of 2.)

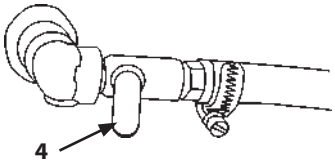

Fuel Cock Closed Position

MDC1-07-020-2 ja

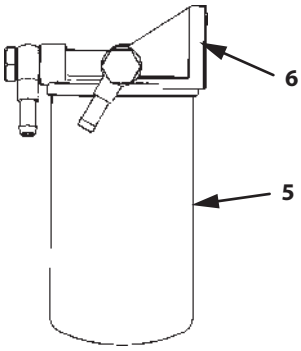

ZX120-7 class

MDFX-07-015-1 ja

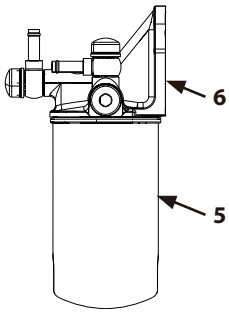

ZX160-7, 180-7 class

MDFY-07-142-1 ja

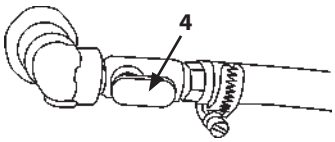

Fuel Cock Open Position

MDAA-07-007-3 ja

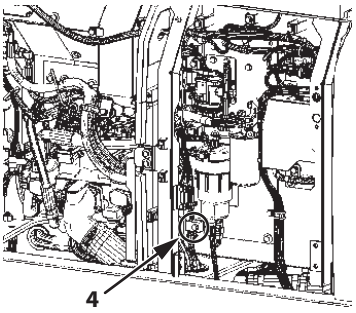

ZX160-7, 180-7 class

MDFY-01-141-5 ja

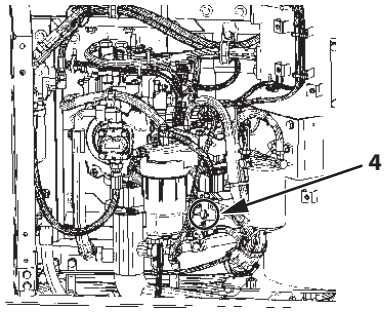

ZX120-7 class

MDFY-07-120-5 ja

ZX200-7, 240-7, 300-7, 330-7 class

1. Close fuel cock (1) in the pump chamber.

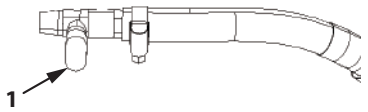

Fuel Cock Closed Position

MDFY-07-057-1 ja

2. Rotate the bottom of filter element (2) counterclockwise by using a spanner to remove filter element (2) from head cover (3).
   Wrench size: 24 mm
3. Apply a thin layer of fuel to the gasket (O-ring) of new filter element (2).
4. Install new filter element (2) on head cover (3) while rotating filter element clockwise. Tighten to 25±2 N·m (2.5±0.2 kgf·m).
   Wrench size: 24 mm

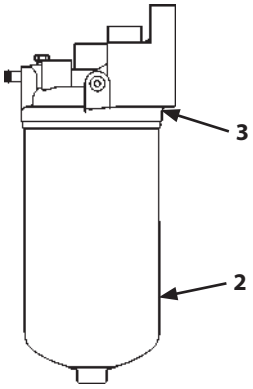

Fuel Main Filter

MDC1-07-047-2 ja

5. Open fuel cock (1) in the pump chamber.
6. After replacing fuel filter element (2), bleed air from the fuel supply system.
   (Refer to Bleeding Air from the Fuel Systemof 2.)

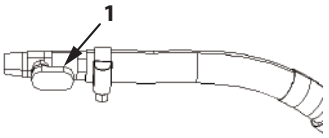

Fuel Cock Open Position

MDFY-07-054-1 ja

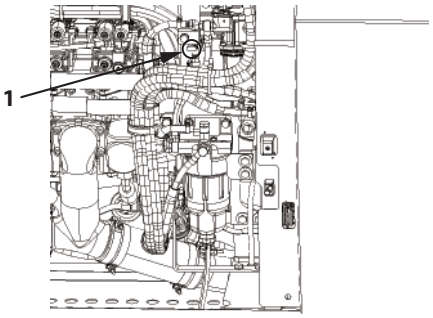

ZX200-7, 240-7 class

MDFY-07-055-1 ja

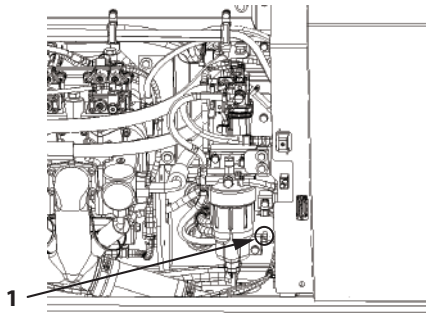

ZX300-7, 330-7 class

MDFY-07-056-1 ja

4 Replace Fuel Pre-Filter Element

---every 1000 hours

IMPORTANT

- **Be sure to use only genuine Hitachi elements. Using a different element may adversely affect engine performance and/or shorten the engine service life. Note: any engine failure caused by using other manufacturers' elements is excluded from the Hitachi Warranty Policy.**
- **Take care not to allow dirt and/or water to enter the fuel tank.**

The fuel pre-filter is located as shown at right.

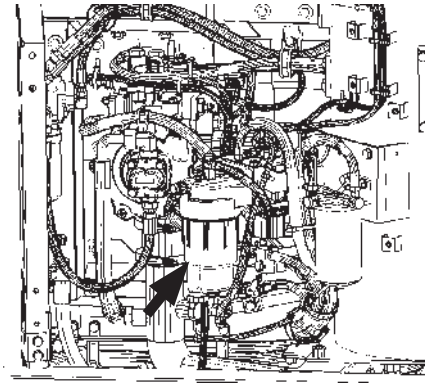

ZX120-7 class

MDFY-07-120-1 ja

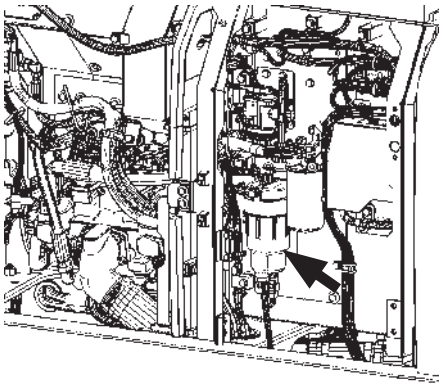

ZX160-7, 180-7 class

MDFY-01-141-1 ja

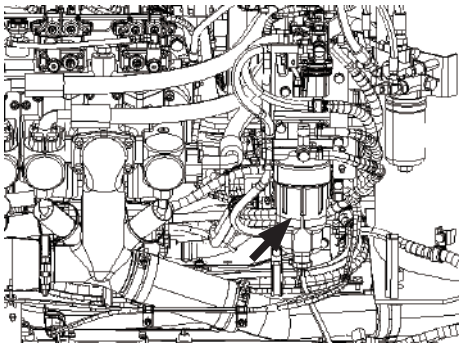

ZX300-7, 330-7 class

MDFY-07-049-1 ja

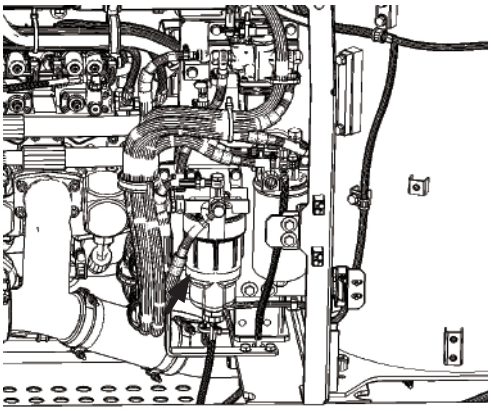

ZX200-7, 240-7 class

MDFY-07-014-1 ja

Replacement Guide

1. Close fuel cock (1).

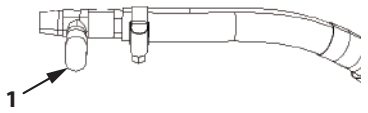

Fuel Cock Closed Position

MDFY-07-057-1 ja

2. Place 1 liter or larger capacity container under drain hose (3).
3. Loosen air bleed plug (1) and drain plug (2). Drain fuel until fuel does not flow out of the filter.
   After draining fuel, remove drain plug (2) and replace O-ring.

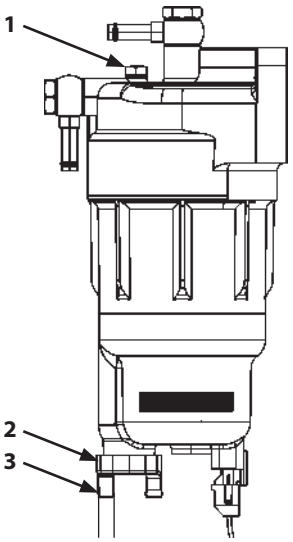

Fuel Pre Filter

MDFY-07-102-1 ja

4. Remove the harness connected to sensor (7).

IMPORTANT

The harness connector has a lock (8).
Press lock (8) and disconnect the connector. If an attempt is made to disconnect the connector without releasing lock (8), it may damage the connector.

5. Remove transparent filter case (4) using the exclusive tool.
6. When transparent filter case (4) is removed, the O-ring for transparent filter case (4) is exposed. Remove the element by hand.
7. Remove filter cartridge (6).
8. Install new filter cartridge (6). When the upper gasket of cartridge (6) contacts the head, further tighten the cartridge by turning it 3/4 turn by hand.
9. Replace O-ring with new one and tighten transparent filter case (4) to 10±1 N·m (1±0.1 kgf·m) using the special tool.
10. Tighten air bleed plug (1) and drain plug (2).
11. Reconnect the harness that was disconnected from sensor (7).

IMPORTANT

Fit the parts together until lock (8) of the harness connector is locked in place.

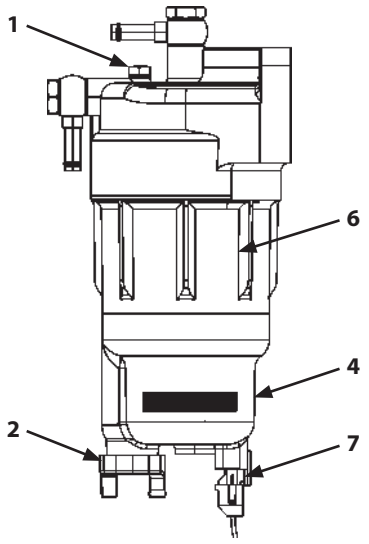

Fuel Pre Filter

MDC1-07-092-4 ja

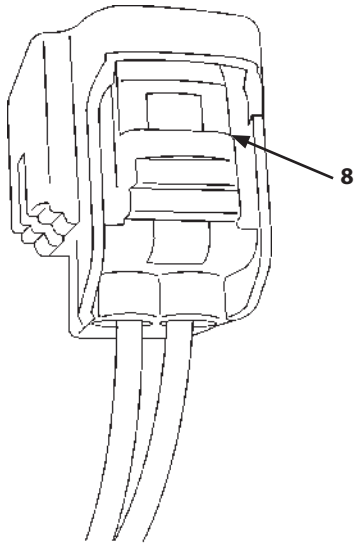

Detailed View of Sensor (7) Connector

MDAK-07-057-1 ja

12. Open fuel cock (5).
13. After replacing fuel filter element, bleed air from the fuel supply system.
    (Refer to Bleeding Air from the Fuel System of 2.)

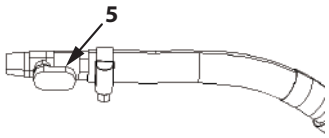

Fuel Cock Open Position

MDFY-07-054-2 ja

5 Check Fuel Hoses

...daily

--- every 250 hours

CAUTION

Fuel leaks can lead to fires that may result in serious injury.

- **Escaping combustible fluid can cause fires. Check for kinked hoses, hoses that rub against each other, and any fuel leaks.**
- **Repair or replace any loose or damaged hoses.**
- **Never reinstall bent or damaged hoses.**

According to the check points shown below, check hoses for oil leaks and damage.

If any abnormality is found, replace or retighten as instructed in the table.

Hose

Interval (hours)	Check Points	Check For	Remedies	
Daily	Hose ends	Leak (1)	Retighten or replace	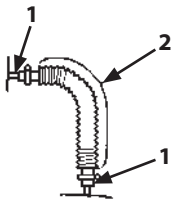
	Hose covers	Wear, crack (2)	Replace	
Every 250 hours	Hose covers	Crack (3)	Replace	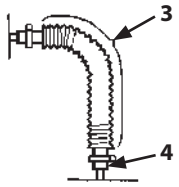
	Hose ends	Crack (4)	Replace	
	Hose	Bend (5), Collapse (6)	Replace	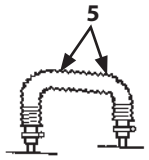 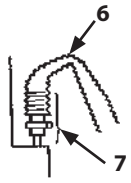
	Hose fittings	Corrosion (7)	Replace	

F. Air Cleaner

1 Clean and Replace Air Cleaner Element (Outer)

Clean --- every 250 hours or when the restriction indicator comes ON

Replace --- after cleaning 6 times or after one year, which ever comes first

CAUTION

- **Stop the engine before cleaning or replacing air cleaner element.**
- **Dust may be dispersed when cleaning the air cleaner element. Airborne dust may get into your eyes or on your skin or may be inhaled, potentially adversely affecting your health. Conduct the cleaning outdoor or in a ventilated area. Use appropriate protective equipment.**

IMPORTANT

Clean and replace the air cleaner element as indicated below. If the procedure below is not followed correctly, the air cleaner element may be damaged. Damage to the air cleaner element may lead to engine malfunction.

- **Do not remove the inner element when cleaning the outer element.**
- **Use compressed air at 0.69 MPa (7 kgf/cm^2) or less when cleaning the outer element.**
- **Use clean and dried compressed air.**
- **When cleaning, keep the air nozzle at a distance from the element.**
- **Replace the inner element when replacing the outer element. Do not reuse the inner element.**

Clean or replace the outer element.

Stop the engine before servicing outer element (1).

1. Remove clamp (2) of the cover. Remove the cover. Remove any dirt from the case.
2. Remove outer element (1) by holding its edge and slowly shaking it left to right, up and down while twisting it. Do not scatter dirt while removing outer element (1).
3. Do not remove the inner element.

IMPORTANT

Do not hit or strike outer element (1) against another object to clean the element.

4. Use compressed air pressure [less than 0.69 MPa (7 kgf/cm^2)] to blow from the inside to the outside of outer element (1) to clean it.
   After that, blow compressed air along the pleats, and then blow out from the inside.
   When blowing compressed air, be sure to keep the air nozzle at least 50 mm away from the element.
5. After cleaning is complete, be sure to check outer element (1) for any damage such as holes or wear of filter paper. If any damage is found, replace the element with a new one.

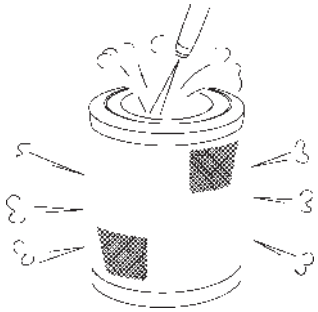

MDFY-07-159 ja

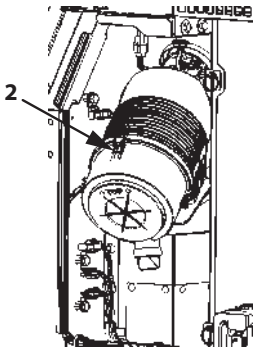

Outside of Air Cleaner
ZX120-7 class

MDFY-07-121-1 ja

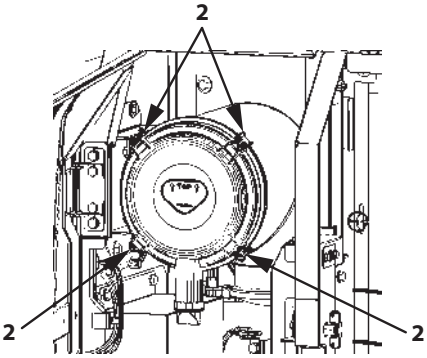

Outside of Air Cleaner
ZX160-7, 180-7 class

MDFY-01-142-1 ja

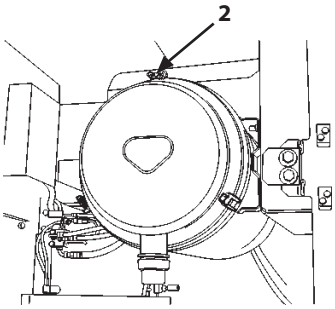

Outside of Air Cleaner
ZX200-7, 240-7, 300-7, 330-7 class

M1U1-07-027-2 ja

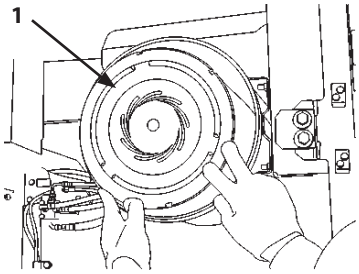

Air Cleaner (Outer Element)

M1U1-07-028-2 ja

6. Press outer element (1) into the air cleaner body straightly by hand. Ensure that outer element (1) is properly installed by pushing its bottom edge.
7. Install cover and tighten clamps (2).
8. If the air filter restriction indicator lights soon after cleaning outer element (1), even if it has been cleaned less than 6 times, replace both outer and inner elements with new ones.

IMPORTANT

Do not install outer element (1) and/or the cover forcibly when installing the clamps. Doing so may result in deformation of clamps (2), element, and/or cover.

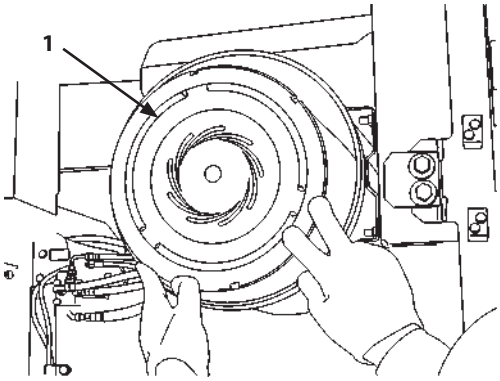

M1U1-07-028-1 ja

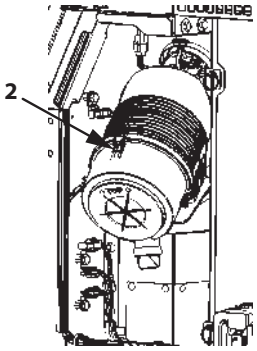

ZX120-7 class

MDFY-07-121-1 ja

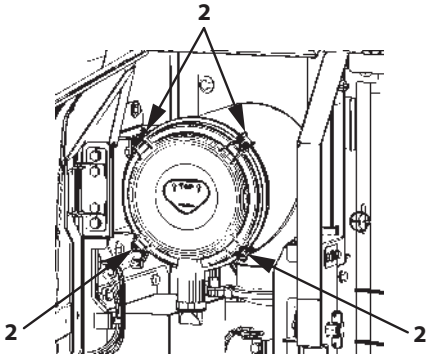

ZX160-7, 180-7 class

MDFY-01-142-1 ja

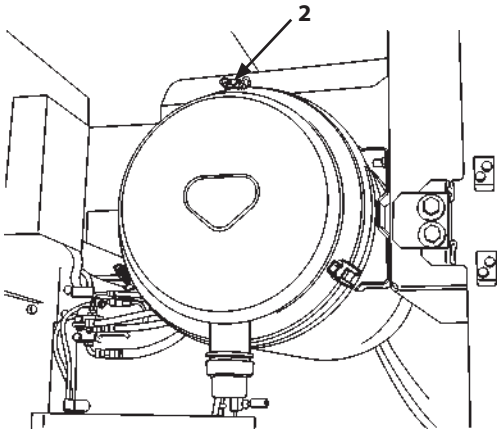

ZX200-7, 240-7, 300-7, 330-7 class

M1U1-07-027-1 ja

2 Replace Air Cleaner Element (Inner)

Replace --- When outer element is replaced

Replacing the Inner Element

IMPORTANT

Do not clean and reuse inner element (3).

1. After removing outer element (1), clean inside the air cleaner body (2) with a clean cloth before removing inner element (3).
2. Remove inner element (3). Replace it with new one.

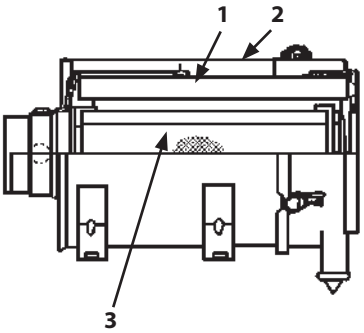

Cross Section of Air Cleaner Housing

M157-07-061-2 ja

G. Cooling System

Coolant

IMPORTANT

Use soft water as a coolant. Do not use strong acid or alkaline water. Use the coolant with genuine Hitachi Long-Life Coolant (LLC) mixed by 30 to 50 %.
If a coolant mixed with less than 30 % of Hitachi Long-Life Coolant is used, service life of the cooling parts may be shortened due to damage by freezing or corrosion of coolant system parts.

Recommended products	Alternative products
Hitachi Genuine Long-Life Coolant	Organic type corrosion inhibitor long life coolant

Antifreeze Mixing Ratio

Air Temperature [°C]	Mixing Ratio [%]	ZX120-7 class		ZX160-7, 180-7 class		ZX200-7 class	
		Antifreeze [L]	Soft water [L]	Antifreeze [L]	Soft water [L]	Antifreeze [L]	Soft water [L]
-1	30	6.3	14.7	6.9	16.1	9.3	21.7
-15	35	7.4	13.6	8.1	14.9	10.9	20.1
-20	40	8.4	12.6	9.2	13.8	12.4	18.6
-25	45	9.5	11.5	10.4	12.5	14	17
-30	50	10.5	10.5	11.5	11.5	15.5	15.5

Air Temperature [°C]	Mixing Ratio [%]	ZX240-7 class		ZX300-7 class		ZX330-7 class	
		Antifreeze [L]	Soft water [L]	Antifreeze [L]	Soft water [L]	Antifreeze [L]	Soft water [L]
-1	30	9.3	21.7	14.4	33.6	14.4	33.6
-15	35	10.8	20.2	16.8	31.2	16.8	31.2
-20	40	12.4	18.6	19.2	28.8	19.2	28.8
-25	45	14.0	17.0	21.6	26.4	21.6	26.4
-30	50	15.5	15.5	24.0	24.0	24.0	24.0

Precautions for Handling Antifreeze

CAUTION

Antifreeze is poisonous.

- **Antifreeze is poisonous; if ingested, it can cause serious injury or death. Induce vomiting and get emergency medical attention immediately.**
- **If antifreeze is accidentally splashed into eyes, flush with water for 10 to 15 minutes and get emergency medical attention.**
- **When storing antifreeze, be sure to keep it in a clearly marked container with a tight lid. Always keep antifreeze out of the reach of children.**
- **Pay attention to fire hazards. Antifreeze is specified as a dangerous substance in the fire protection law.**
- **When disposing of antifreeze, be sure to comply with all local regulations. When storing or disposing of antifreeze, be sure to comply with all local regulations.**

1 Check Coolant Level

--- daily

1. Confirm that pilot shut-off lever (1) is in the LOCK position.
2. Confirm that all control levers are placed in neutral.
3. Insert key (2) into the key switch and turn it to the ON position. Press and hold home switch (3) with the engine stopped.
   Coolant level indicator (4) must be displayed in green.

IMPORTANT

Do not rely only on the monitor display for checking machine conditions, such as coolant level.
Visually check them yourself as required.
Always check the machine on a firm, level surface.
Do not start the engine during the check.

NOTE

If the security function is enabled, a password is required.

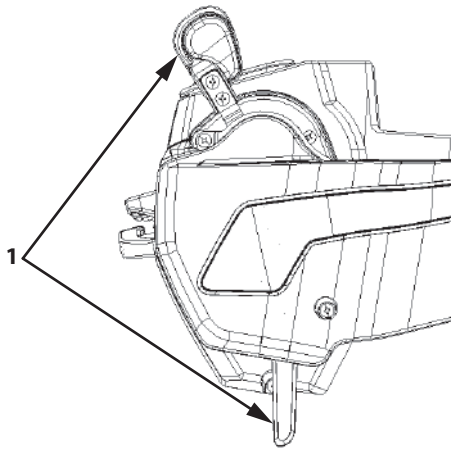

LOCK position

MDFY-01-088-2 ja

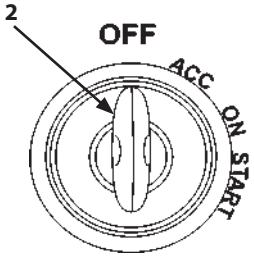

MDCD-01-030-3 ja

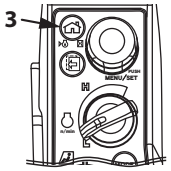

MDFY-01-094-8 ja

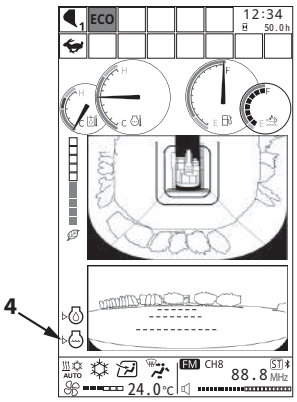

MDFY-MT-130-2 ja

---Visual Inspection

The coolant level must be between the FULL (3) and LOW (4) marks on expansion tank (2).

If coolant is low, remove cap (1) from expansion tank (2) and refill coolant.

CAUTION

Do not remove cap (1) until the coolant in the radiator cools down. Hot steam may spout out, possibly causing severe burns. After the coolant cools down, slowly loosen cap (1) to release the air pressure inside before removing it.

If expansion tank (2) is empty, add coolant on the cap (1) side of the expansion tank.

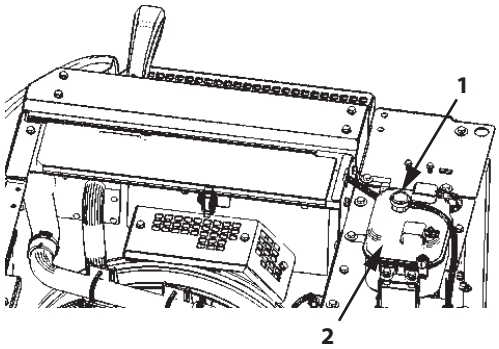

ZX120-7 class

MDFY-07-128-4 ja

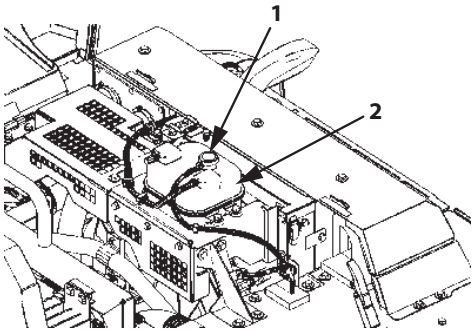

ZX160-7, 180-7 class

MDFY-01-148-4 ja

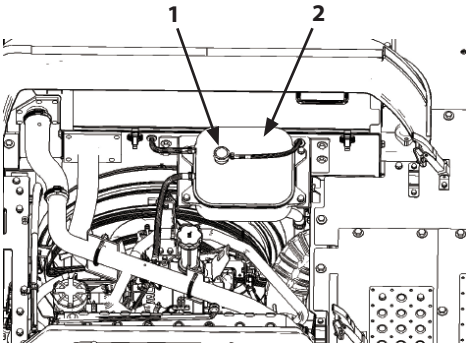

ZX200-7, 240-7, 300-7, 330-7 class

MDFY-07-015-3 ja

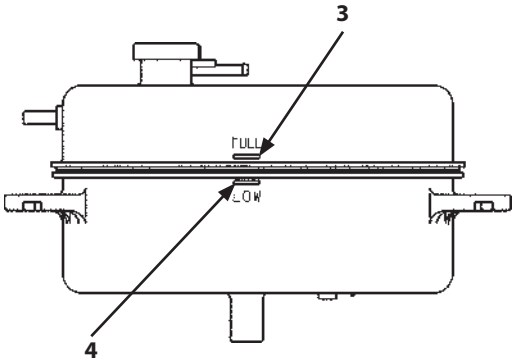

ZX200-7, 240-7, 300-7, 330-7 class

MDAK-07-048-1 ja

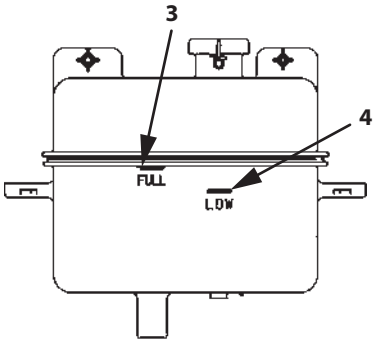

ZX120-7, 160-7, 180-7 class

MDFY-07-123-2 ja

2 Inspect V-belt

ZX120-7, 160-7, 180-7 class
---every 250 hours

IMPORTANT

- **If the V-belt breaks, the battery cannot charge and the engine will overheat.**
- **As an auto-tensioner is used, measuring and adjusting its tension is not required.**

Inspect

Visually check the V-belt for damage. Replace with a new one if cracking is found. Contact your authorized dealer to replace the V-belt.

Replace the V-belt

When the position of the tensioner is as illustrated below, replace the V-belt.

ZX120-7 class

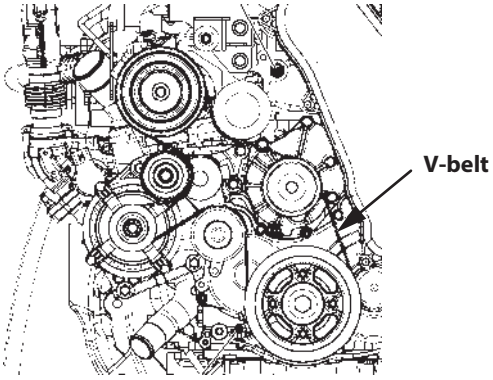

MDFX-07-017-1 en_GB

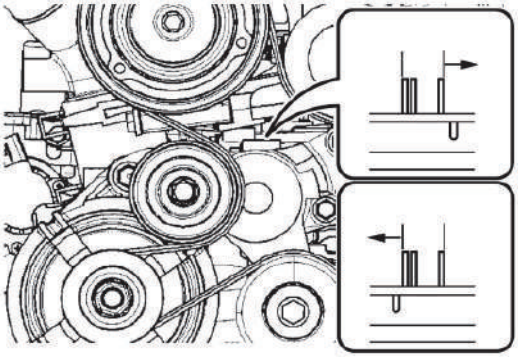

MDFY-07-166 ja

ZX160-7, 180-7 class

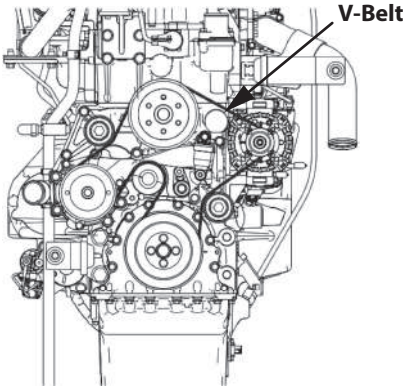

MDFY-07-163-1 en_GB

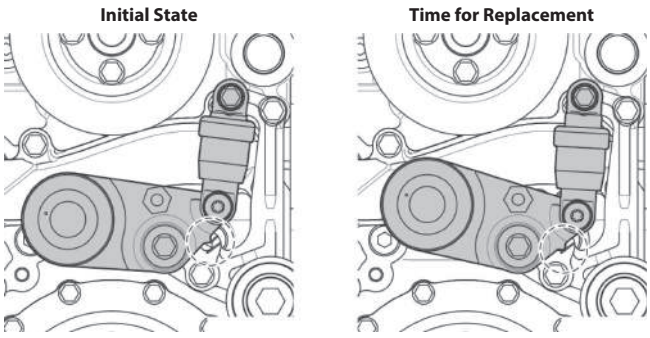

MDFY-07-164-1 en_GB

3 Check and Adjust V-belt Tension

ZX200-7,240-7,300-7,330-7 class
--- every 250 hours (first time only, after 50 hours)

IMPORTANT

A loose fan belt may result in insufficient battery charging, engine overheating, as well as a rapid, abnormal belt wear. Belts that are too tight can damage both bearings of pumps and the alternator, as well as the belts.

Inspect

Check fan belt tension at the midpoint between the fan pulley (A) and the alternator pulley (C) by pressing down with your thumb at a force of approximately 98 N (10 kgf). The correct amount of deflection is illustrated at right.

Visually check the belt for wear. Replace if necessary.

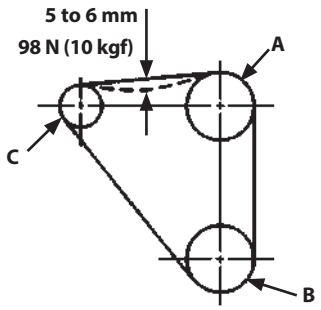

Appearance of fan belt (ZX200-7, 240-7 class)
M1GR-07-006-2 en_GB

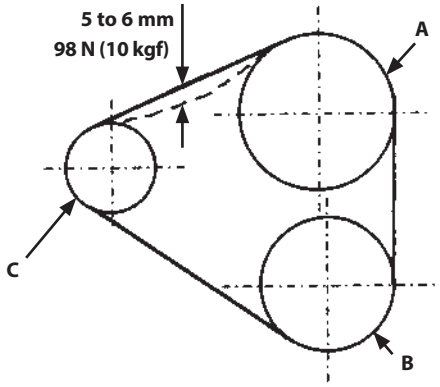

Appearance of fan belt (ZX300-7, 330-7 class)
M1HM-07-001-2 en_GB

A	Fan pulley	C	Alternator pulley
B	Crank pulley		

Adjust Belt Tension

1. Loosen lock nut (1) at the top of alternator (3), and lock nut (4) at the bottom of alternator.
2. Rotate tension adjust bolt (2) to adjust the belt tension and turn alternator (3) back and forth to make sure the tension is adjusted accurately.
3. Securely tighten lock nuts (1) and (4).

   Tightening Torque

   Nut (1) : 76 N·m (7.6 kgf·m)

   Nut (4) : 127 N·m (12.7 kgf·m)

IMPORTANT

When a new belt is installed, be sure to re-adjust the tension after operating the engine for 3 to 5 minutes at slow idle speed to be sure that the new belt is seated correctly.

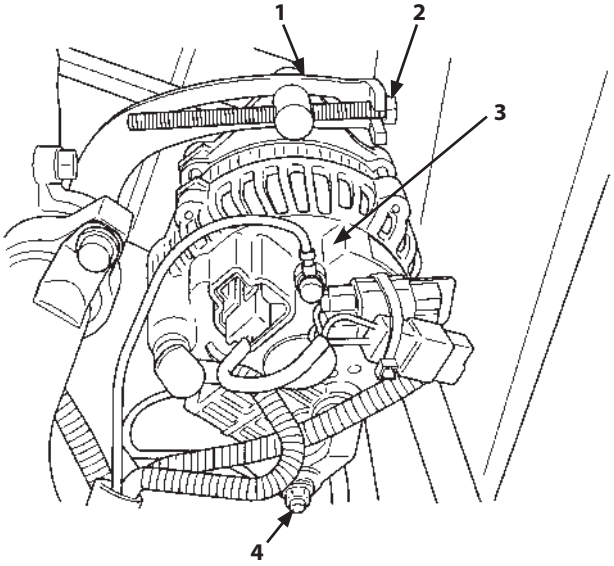

M197-07-072-1 ja

4 Change Coolant

---twice a year (in spring and autumn)

NOTE

When Hitachi Genuine Long-Life Coolant is used, change interval is once every two years (in autumn every other year) or every 4000 hours whichever comes first.

CAUTION

Do not loosen cap (1) on the expansion tank when coolant in the radiator is hot. Hot steam may spout out, possibly causing severe burns. After the coolant cools down, slowly loosen cap (1) to release the air pressure inside before removing it.

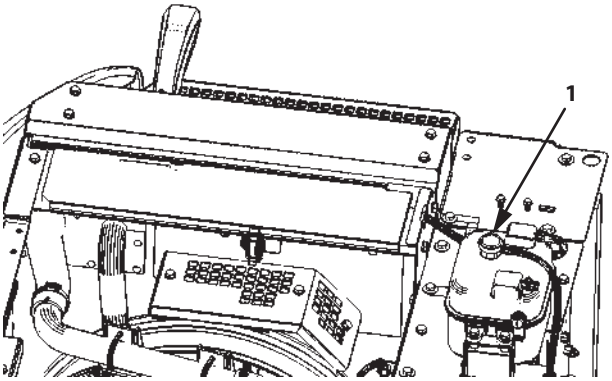

ZX120-7 class

MDFY-07-128-3 ja

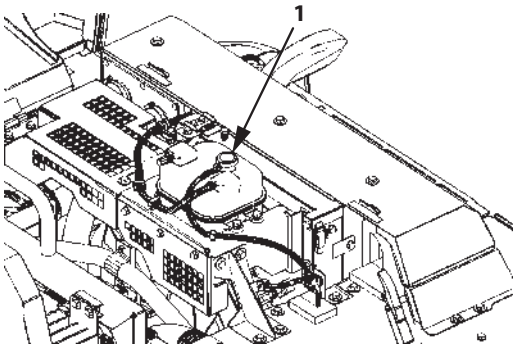

ZX160-7, 180-7 class

MDFY-01-148-2 ja

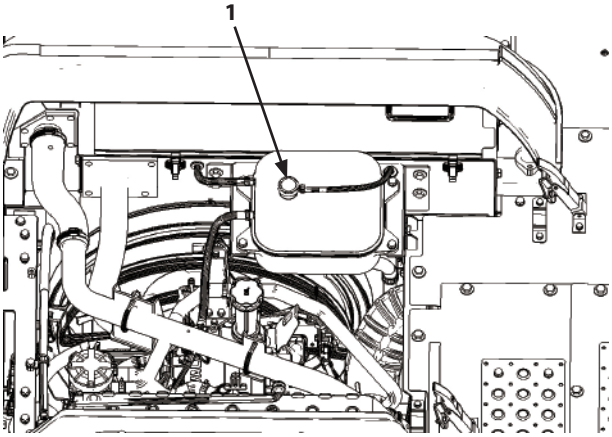

ZX200-7, 240-7, 300-7, 330-7 class

MDFY-07-015-2 ja

Coolant Changing Procedures

1. Park the machine according to the instructions in Preparations for Inspection and Maintenance (7-8).
2. ZX120-7 class
   Remove the left and right screens and remove bolts (3).

   ZX160-7, 180-7 class
   Remove the right screen.

   ZX200-7, 240-7, 300-7, 330-7 class
   Remove the under cover.

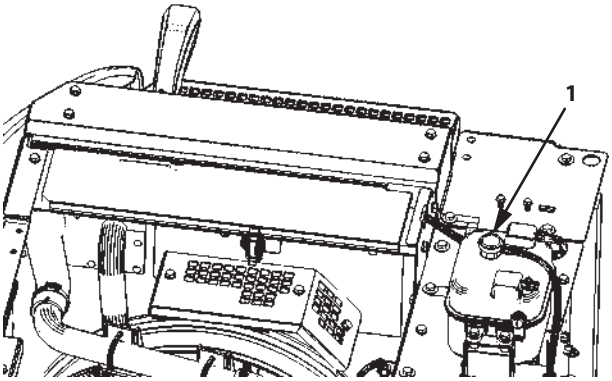

ZX120-7 class

MDFY-07-128-3 ja

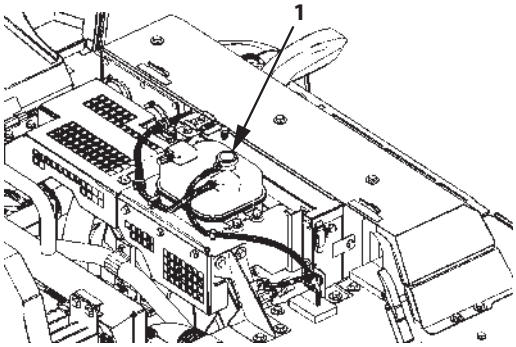

ZX160-7, 180-7 class

MDFY-01-148-2 ja

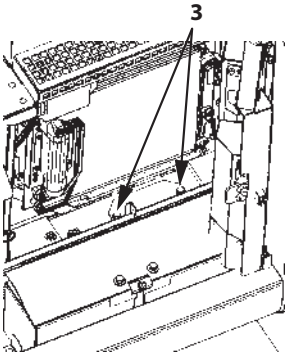

ZX120-7 class

MDFY-07-126-1 ja

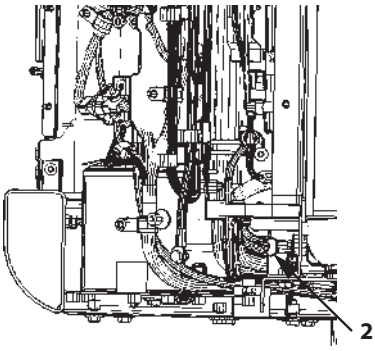

ZX120-7 class

MDFY-07-127-1 ja

3. Remove cap (1) of the expansion tank and open drain cock (2) of the radiator to drain the coolant. Remove impurities such as scale and sludge at the same time.
4. Close drain cock (2) and fill with soft or tap water with few impurities, along with detergent (radiator cleaner); put cap (1) of the expansion tank back in place. Run the engine at slightly higher than slow idle until the needle of the coolant temperature gauge reaches horizontal, and then for another 10 minutes.
5. Stop the engine and open radiator drain cock (2). Flush out the cooling system with tap water until the water coming out is clear; this helps remove rust and sediment.
6. Close radiator drain cock (2) and fill with soft or tap water with few impurities and this time mix in LLC. When adding coolant, do so slowly to avoid mixing air bubbles into the system.
   Fill coolant in the expansion tank until its level reaches the upper limit line.

IMPORTANT

If coolant is filled above the upper limit line, air in the cooling system may not be bled from the expansion tank. Do not fill coolant above the upper limit line.

7. Run the engine for several minutes until the coolant temperature stabilizes, and then fully bleed air from the cooling system. Stop the engine and make sure the coolant level is in between the upper and lower lines inside the expansion tank. Add coolant if necessary. Check the coolant level again (Should be between the upper and lower limit lines.)

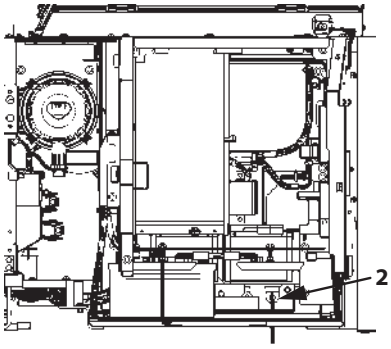

ZX160-7, 180-7 class

MDFY-01-144-1 ja

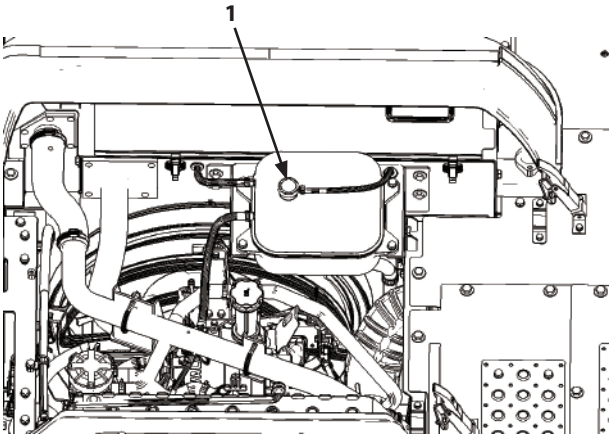

ZX200-7, 240-7, 300-7, 330-7 class

MDFY-07-015-2 ja

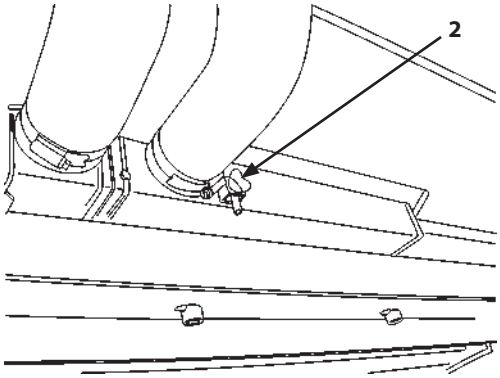

ZX200-7, 240-7, 300-7, 330-7 class

M1U1-07-029-2 ja

5 Clean Radiator, Oil Cooler and Intercooler Core

Outside --- every 500 hours

Inside --- once a year

WARNING

- **Touching moving parts is hazardous. Getting cut or entangled can lead to serious injury or death.**
- **Before servicing, stop the engine and the fan to prevent any accident.**
- **Never attempt to start the engine when the cover is open.**
- **If tools or parts are dropped into the radiator/oil cooler/intercooler core, remove them before starting the engine.**

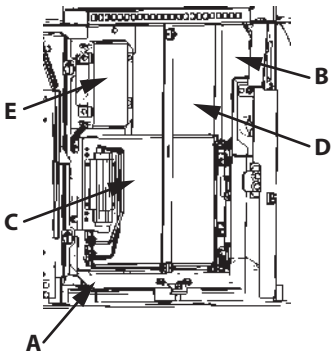

ZX120-7 class

MDFY-07-124-1 ja

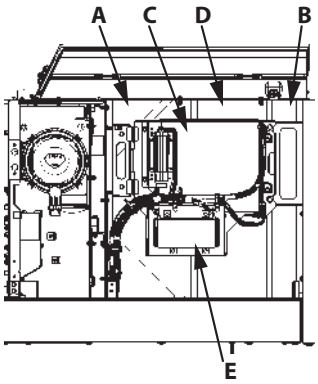

ZX160-7, 180-7 class

MDFY-01-147-1 ja

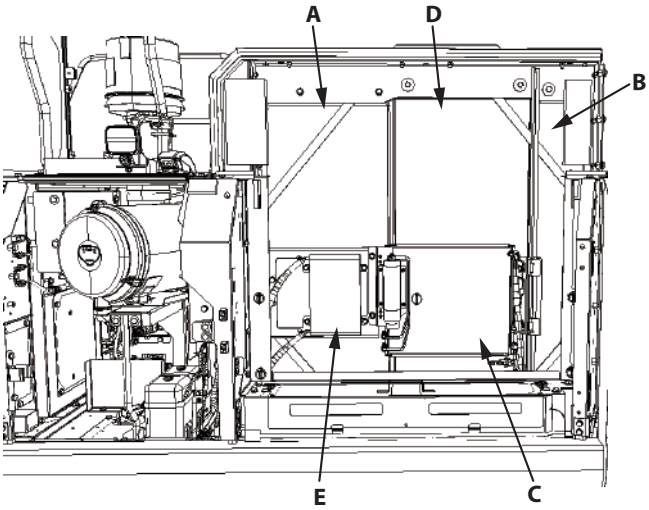

ZX300-7, 330-7 class

MDFY-07-051-1 ja

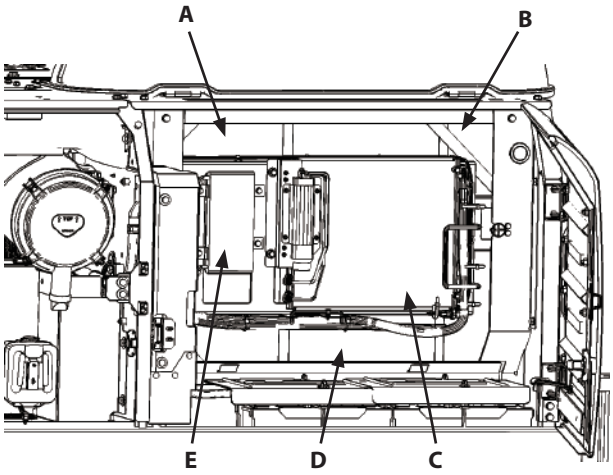

ZX200-7, 240-7 class

MDFY-07-016-1 ja

A	Oil Cooler	D	Radiator
B	Intercooler	E	Fuel Cooler
C	Air Conditioner Condenser		

CAUTION

Dust may be dispersed when using pressurized air or water to clean the cooler cores. Airborne dust may get into your eyes or on your skin or may be inhaled, potentially adversely affecting your health. Conduct the cleaning outdoor or in a ventilated area. Use appropriate protective equipment.

IMPORTANT

Maximum air or water pressure for cleaning is 0.2MPa(2kgf/cm2).

To prevent reduced performance of the cooling system, clean the radiator, oil cooler and intercooler core periodically with pressurized air or water.

Cleaning

ZX120-7, 200-7, 240-7 class

1. Open radiator cover (1).
2. Release the catches (2), open cover (3) and clean where needed.

Take care not to break fins during cleaning.

After finishing the cleaning, close cover (3) and engage catches (2) to secure.

IMPORTANT

When the machine is operated in dusty areas, check the cores periodically and clean if necessary.

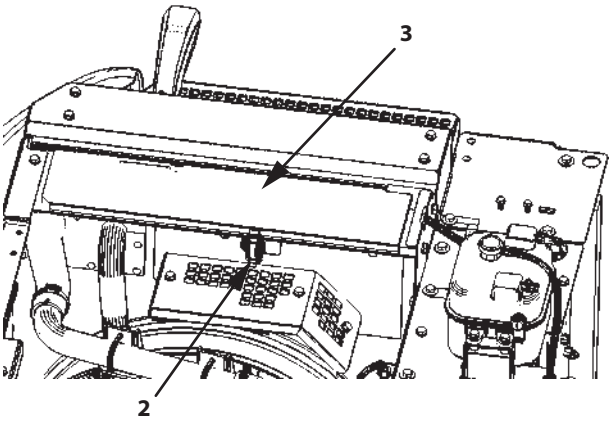

ZX120-7 class

MDFY-07-128-1 ja

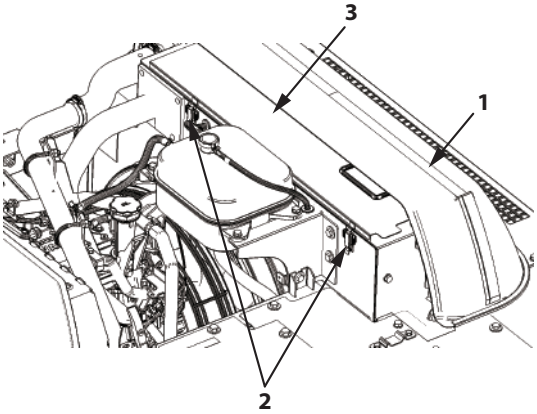

ZX200-7, 240-7 class

MDFY-07-058-1 ja

ZX160-7, 180-7, 300-7, 330-7 class

1. Release the catches (2), open cover (3) and clean where needed.

Take care not to break fins during cleaning.

After finishing the cleaning, close cover (3) and engage catches (2) to secure.

IMPORTANT

When the machine is operated in dusty areas, check the cores periodically and clean if necessary.

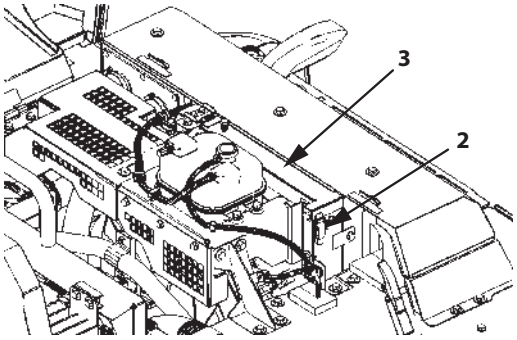

ZX160-7, 180-7 class

MDFY-01-148-3 ja

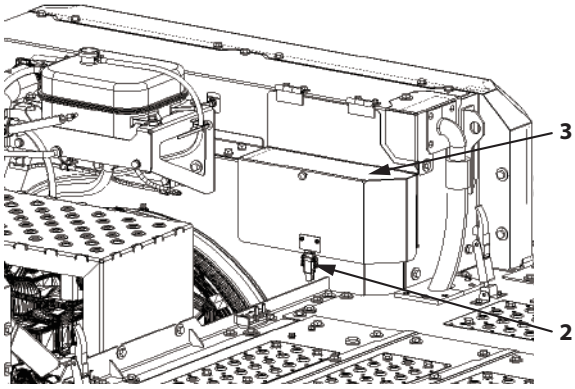

ZX300-7, 330-7 class

MDFY-07-059-1 ja

6 Clean Oil Cooler, Radiator and Intercooler Front Screen

---every 500 hours

IMPORTANT

When working on very dusty sites, check screen (1) daily for dirt. If screen (1) is clogged, remove and clean it.

Remove ring pins (2) and take off the screen.

When refitting screen (1), be sure to attach the ring pins (2) to prevent the screen falling off.

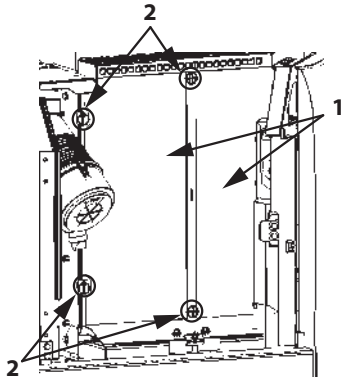

ZX120-7 class

MDFY-07-130-1 ja

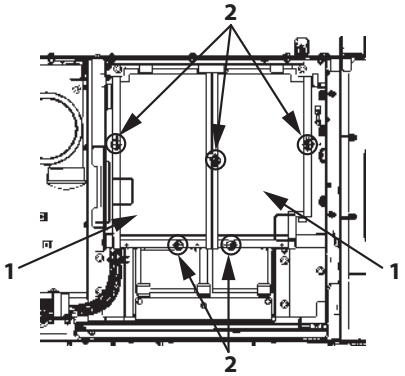

ZX160-7, 180-7 class

MDFY-01-150-1 ja

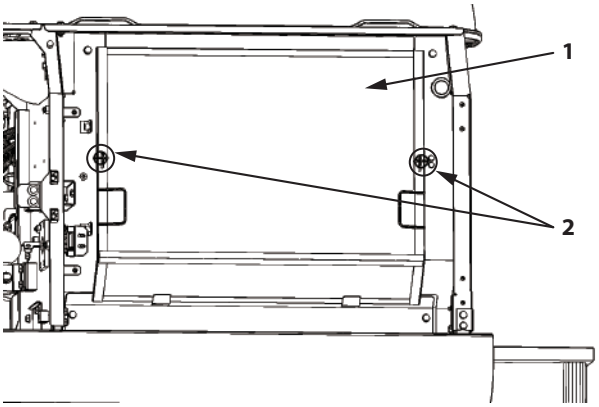

ZX200-7, 240-7, 300-7, 330-7 class

MDFY-07-045-1 ja

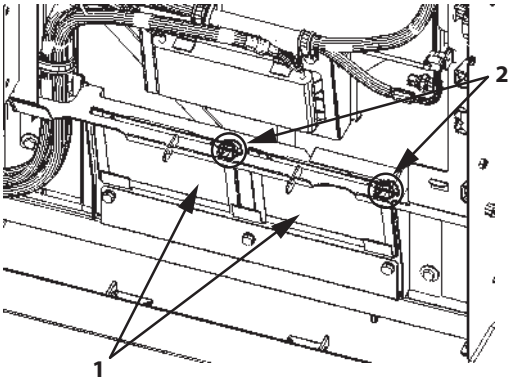

ZX160-7, 180-7 class

MDFY-01-149-1 ja

7 Clean Air Conditioner Condenser

--- every 500 hours

IMPORTANT

Check the condenser daily for dirt when working at very dusty sites; if clogged, remove the screen and clean it.

8 Clean fuel oil cooler

--- every 500 hours

IMPORTANT

Check the fuel cooler daily for dirt when working at very dusty sites; if clogged, remove the screen and clean it.

H. Electrical System

WARNING

Improper radio communication equipment and associated parts, and/or improper installation of radio communication equipment affects the machine's electronic parts, causing unintended movement of the machine.

Improper installation of electrical equipment may cause machine failure and/or a fire on the machine.

Be sure to consult your authorized dealer when installing radio equipment or additional electrical parts, or when replacing electrical parts.

IMPORTANT

Never attempt to disassemble or modify the electrical/electronic components. If replacement or modification of such components is required, contact your authorized dealer.

1 Battery

WARNING

- **While charging or using the battery, explosive gas can be produced. Keep sparks and flames away from batteries.**
- **Do not leave cover (1) removed. Do not keep tools, metals or flammable materials around the battery or inside the battery room. If a metal tool is placed across the battery terminal and a machine component such as the engine block, sparks may be created, possibly resulting in fire and/or explosion.**
- **Do not continue to use or charge the battery when the electrolyte level is lower than specified. Explosion of the battery may result.**
- **Charge the batteries in a well ventilated location.**
- **Sulfuric acid is used in the battery electrolyte. It eats skin and clothing, and even metal. Wearing eye protection and rubber gloves.**
- **Do not tilt the battery. The electrolyte may leak, causing burns or damaging clothing.**

SA-032 ja

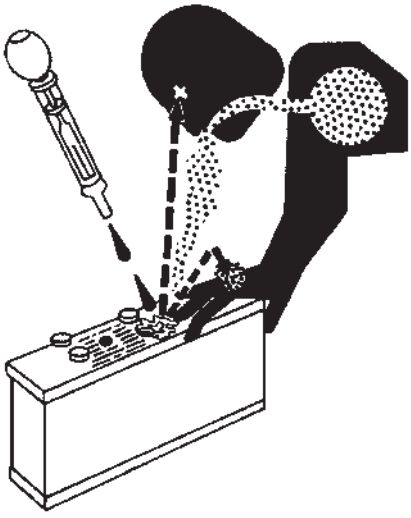

SA-036 ja

IMPORTANT

- **If the battery is used with the electrolyte level lower than the specified lower level, the battery may deteriorate quickly.**
- **Do not refill the electrolyte above the specified upper level. Electrolyte may spill, damaging painted surfaces and/or corroding other machine parts.**

NOTE

If electrolyte is refilled above the specified upper level line or beyond the bottom end of the sleeve, use a pipette to remove the excess electrolyte until the electrolyte level is down to the bottom end of the sleeve. After neutralizing the wiped up electrolyte with baking soda (sodium bicarbonate), flush it with plenty of water. Or, consult the battery manufacturer.

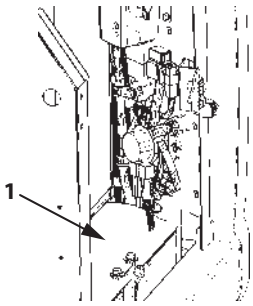

ZX120-7 class

MDFY-07-131-1 ja

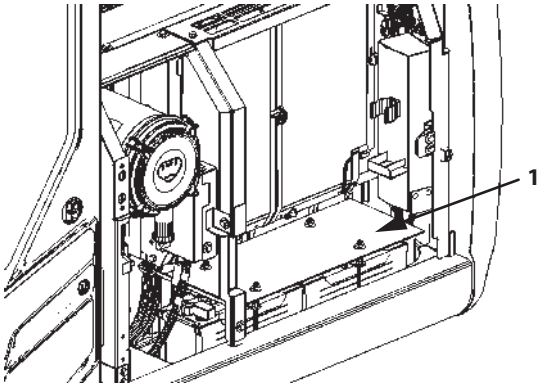

ZX160-7, 180-7 class

MDFY-01-151-1 ja

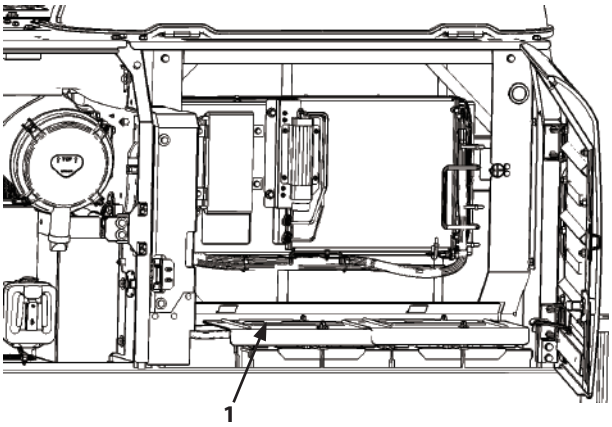

Battery Location
ZX200-7, 240-7, 300-7, 330-7 class

MDFY-07-016-2 ja

Precautions for Handling Batteries

- If electrolyte spills on your skin and/or clothes, immediately flush the skin and/or clothes with water and then wash further with soap.
  If splashed in the eyes, flush with water for approximately 15 minutes and seek immediate medical attention.
- Avoid using fire hazards such as matches, lighters and tobacco near the batteries. Do not allow sparks to fly.
- Check or service the battery only after stopping the engine, turning the key OFF and removing the battery caps.
- Contact with the battery just after operation may cause personal injury. Wait for the battery to cool.
- When the battery is charging, flammable hydrogen gas is created. Remove the battery from the machine and charge the battery with the caps off in a well ventilated area.
- When disconnecting the battery terminals, first disconnect the ground line [minus (-)] side terminal. When connecting the battery terminals, connect the ground line [minus (-)] side terminal last. If a piece of metal, such as a tool comes in contact with the battery plus (+) side terminal and the machine frame when both terminals are connected, the electrical system may short-circuit, possibly creating a dangerous situation.
- When a battery gets old, mixing in a new battery with an old may cause the new battery to have a shorter than normal life. Replace both batteries at the same time.
- Loose terminals may cause sparks to fly. Securely tighten them.

Electrolyte Level Check --- monthly

Check the electrolyte level at least once a month.

1. Park the machine on level ground and stop the engine.
2. How to Check the Electrolyte Level
   a. When checking the level from the battery side: Clean around the level marks with a water-dampened cloth and make sure the electrolyte level is between U.L (Upper Level) and L.L (Lower Level). Do not use a dry towel. Static electricity may develop, causing the battery gas to explode.
   If the electrolyte level is lower than the middle level between the U.L and L.L, immediately refill with distilled water or commercial battery fluid.
   After refilling, securely tighten the filler plug.
   Be sure to refill with distilled water before charging (operating the machine).

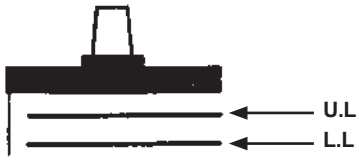

Side of Battery

M146-07-109-2 ja

U.L Upper Level L.L Lower Level

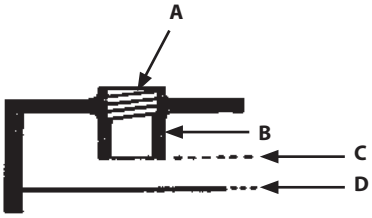

Inside of Battery

M146-07-110-2 ja

A Filler plug C Upper Level
B Sleeve D Lower Level (Separator Top)

   b. If checking from the side is not possible, or if there are no level marks on the side:
   After removing the filler plug from the top of the battery, check the electrolyte level by viewing through the filler port. It is difficult to judge the electrolyte level accurately in this case, so judge its level as shown in the diagrams. When the electrolyte level is lower than the bottom end of the sleeve, refill with distilled water or commercial battery fluid up to the bottom end of the sleeve.
   After refilling, securely tighten the filler plug.
   Be sure to refill with distilled water before charging (operating the machine).
   c. If the level can be checked with an indicator, etc., follow its instructions.

   Checking the Level via an Indicator

Normal		When electrolyte reaches the bottom of the sleeve, surface tension makes the electrodes appear bent.
Low		When the electrolyte surface is lower than the bottom end of the sleeve, the electrode ends are seen straight.

3. Always keep the area around the battery terminals clean. To prevent battery discharge.
   Check terminals for looseness and/or rust. Coat terminals with grease or petroleum jelly to prevent corrosion build up.

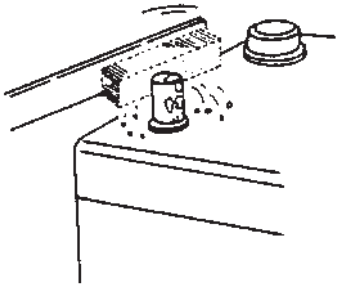

M409-07-072 ja

Replacing the Battery

IMPORTANT

Before replacing the battery, turn battery disconnect switch (1) to OFF position (c).

This machine is equipped with two 12V batteries, which are negatively grounded.

If one battery is damaged on the 24V system, replace the damaged battery with a new battery of the same type. If a maintenance-free battery is damaged, replace it with a new maintenance-free battery. The type of battery charger differs depending on the type of battery. Be careful not to overload and damage the batteries.

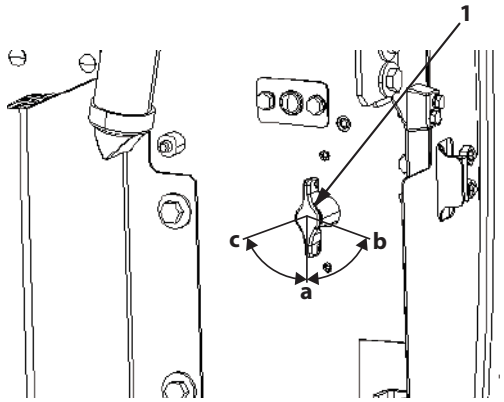

MDFY-07-097-6 ja

a: ON position

b: OFF position (communication terminal power ON)

c: OFF position

Check Electrolyte Specific Gravity ---every month

WARNING

- **Gas produced by the battery can be explosive.**
  Keep sparks and flames away from batteries.
  Use a flashlight to check the battery electrolyte level.
- **Sulfuric acid in battery electrolyte is poisonous. It is strong enough to burn skin, eat holes in clothing, and cause blindness if splashed into the eyes.**
- **Never check the battery charge by placing a metal object across the posts. Use a voltmeter or hydrometer.**
- **Always remove the grounded (-) battery clamp first and replace it last.**

Avoid hazard by:

1. **Charge the batteries in a well ventilated location.**
2. **Wearing eye protection and rubber gloves.**
3. **Avoiding breathing fumes when electrolyte is added.**
4. **Avoiding spilling or dripping electrolyte.**
5. **Using proper booster battery starting procedures.**

If you spill acid on yourself:

1. **Flush your skin with water.**
2. **Apply baking soda or lime to help neutralize the acid.**
3. **If it gets in your eyes, rinse them out for 15 to 30 minutes and get medical attention immediately.**

If acid is swallowed:

1. **Do not induce vomiting.**
2. **Drink large amounts of water or milk.**
3. **Get medical attention immediately.**

IMPORTANT

- **Add water to batteries in freezing weather before you begin operating your machine for the day, or before charging the batteries.**
- **If the battery is used with the electrolyte level lower than the specified lower level, the battery may deteriorate quickly.**
- **Do not refill electrolyte above the specified upper level. Electrolyte may spill, damaging painted surfaces and/or corroding other machine parts.**
- **Take care to keep batteries in a good, charged condition. Failure to do so may prevent the engine from starting.**

NOTE

Check the specific gravity of the electrolyte after it is cooled, not immediately after operation. Immediately after operation the electrolyte is still changing, so it cannot be measured accurately.

Check the electrolyte specific gravity in each battery cell.

The lowest limit of the specific gravity for the electrolyte varies depending on electrolyte temperature. The specific gravity should be kept within the range (A) shown below. Charge the battery if the specific gravity is below the limit.

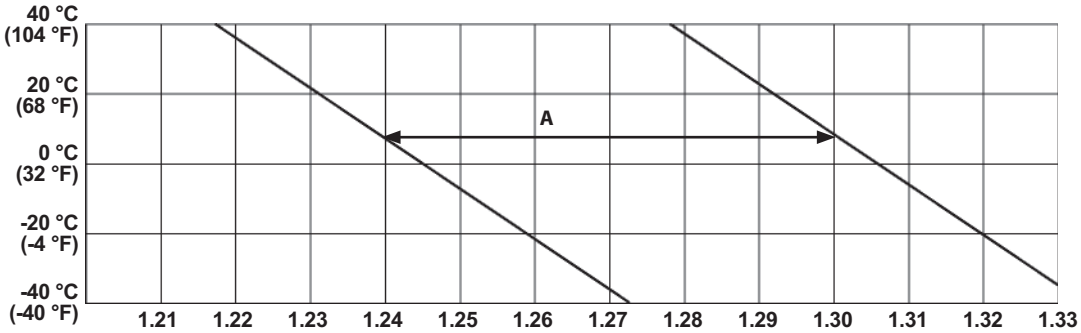

Relationship between Electrolyte Specific Gravity and Temperature

M104-07-054-2 ja

2 Replace Fuses

...as required

If any electrical equipment fails to operate, first check the fuses. The fuse box is located behind the operator's seat.

NOTE

- *One spare fuse for each fuse capacity is provided in the fuse box.*
- *A fuse removing tool is provided in the fuse box.*

Fuse Box

Fuse box (A)

ZX120-7 class

10- CONTROLLER 5 A	20- OPT.3 (BATT) 5 A
9- BACKUP 10 A	19- DCDC 30 A
8- DCDC-IG 5 A	18- IDLE STOP 5 A
7- START 5 A	17- POWER ON 5 A
6- OPT.2 (ALT) 20 A	16- HORN 10 A
5- OPT.1 (ALT) 5 A	15- AUX 10 A
4- SOLENOID 20 A	14- MONITOR 5 A
3- WIPER 15 A	13- RADIO 5 A
2- HEATER 20 A	12- 24 V/LIGHTER 5 A
1- LAMP 20 A	11- FUEL PUMP 5 A

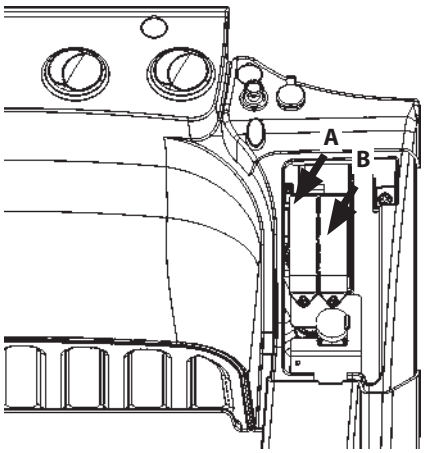

MDFY-01-025-1 ja

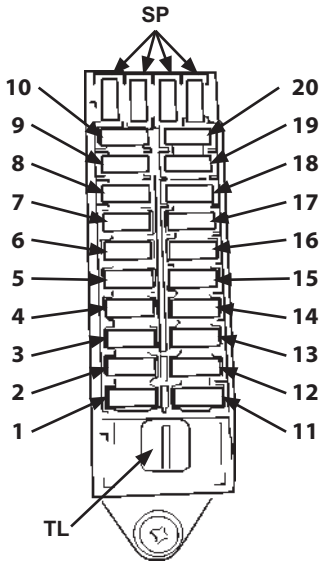

Fuse box (A)

M1GR-01-003-3-1 ja

SP: Spare fuses TL: Tool

ZX160-7, 180-7 class

10- CONTROLLER 5 A	20- OPT.3 (BATT) 5 A
9- BACKUP 10 A	19- HORN 10 A
8- ECU 30 A	18- IDLE STOP 5 A
7- START 5 A	17- POWER ON 5 A
6- OPT.2 (ALT) 20 A	16- MONITOR 5 A
5- OPT.1 (ALT) 5 A	15- AUX 10 A
4- SOLENOID 20 A	14- GLOW RELAY 30 A
3- HEATER 20 A	13- 24 V/LIGHTER 5 A
2- WIPER 15 A	12- FUEL PUMP 5 A
1- LAMP 20 A	11- RADIO 5 A

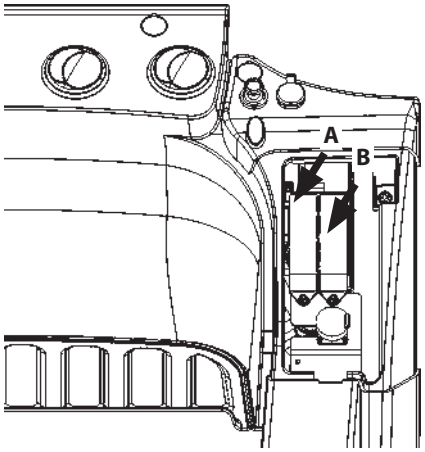

MDFY-01-025-1 ja

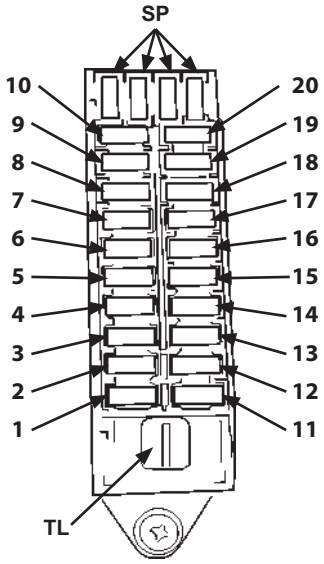

Fuse box (A)

M1GR-01-003-3-1 ja

SP: Spare fuses TL: Tool

ZX200-7, 240-7, 300-7, 330-7 class

10-	CONTROLLER 5 A	20-	OPT.3 (BATT) 5 A
9-	BACKUP 10 A	19-	HORN 10 A
8-	ECU 30 A	18-	IDLE STOP 5 A
7-	START 5 A	17-	POWER ON 5 A
6-	OPT.2 (ALT) 20 A	16-	GLOW RELAY 5 A
5-	OPT.1 (ALT) 5 A	15-	AUX 10 A
4-	SOLENOID 20 A	14-	MONITOR 5 A
3-	HEATER 20 A	13-	RADIO 5 A
2-	WIPER 15 A	12-	LIGHTER/SOKET (24 V) 5 A
1-	LAMP 20 A	11-	FUEL PUMP 5 A

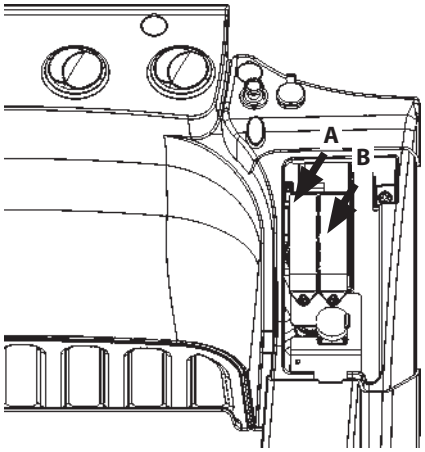

MDFY-01-025-1 ja

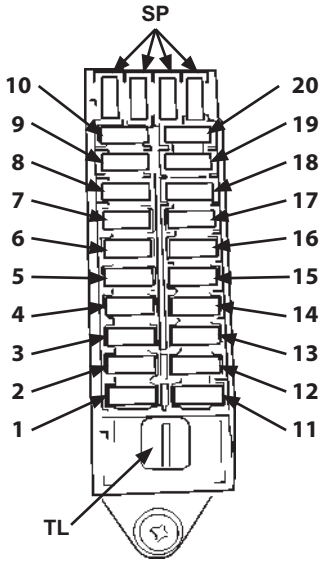

Fuse box (A)

M1GR-01-003-3-1 ja

SP: Spare fuses TL: Tool

Fuse box (B)

ZX120-7 class

30-	A/F HEATER (12 V) 15 A	40-	PI_SHUT-OFF 5 A
29-	ECU_MAIN (12 V) 20 A	39-	USB 5 A
28-	[GN[(12 V) 15 A	38-	AUX_3 10 A
27-	12V_SOCKET 10 A	37-	AUX_2 10 A
26-	AERIAL_C/U 5 A	36-	DISCONNECT_BACK-UP 5 A
25-	MG_POWER 10 A	35-	EDU 20 A
24-	EL_POWER 10 A	34-	ECU_BACKUP (12 V) 3 A
23-	12V_UNIT 20 A	33-	WARNING_LAMP 10 A
22-	CAB_LAMP_REAR 10 A	32-	SEAT_COMPR 10 A
21-	SEAT_HEATER 10 A	31-	QUICK_HITGH 5 A

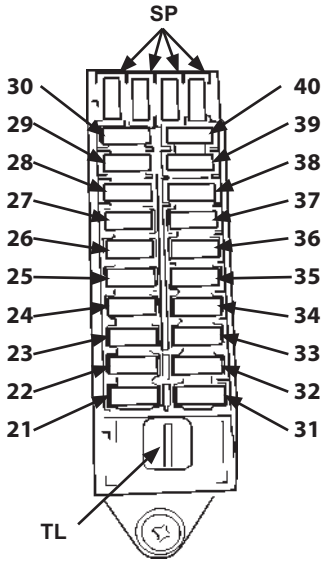

Fuse box (B)

M1GR-01-003-4-1 ja

SP: Spare fuses TL: Tool

ZX160-7, 180-7 class

30-	EL_POWER 10 A	40-	-
29-	MG_POWER 10 A	39-	USB 5 A
28-	STARTER 5 A	38-	AUX_3 10 A
27-	SOCKET (12 V) 10 A	37-	AUX_2 10 A
26-	AERIAL_C/U (12 V) 5 A	36-	DISCONNECT_BACK-UP 5 A
25-	PI_SHUT-OFF 5 A	35-	DCU 20 A
24-	SENSOR_UNIT 10 A	34-	UREA_HEAT 20 A
23-	12V_UNIT 20 A	33-	WARNING_LAMP 10 A
22-	CAB_LAMP_REAR 10 A	32-	SEAT_COMPR 10 A
21-	SEAT_HEATER 10 A	31-	QUICK_HITCH 5 A

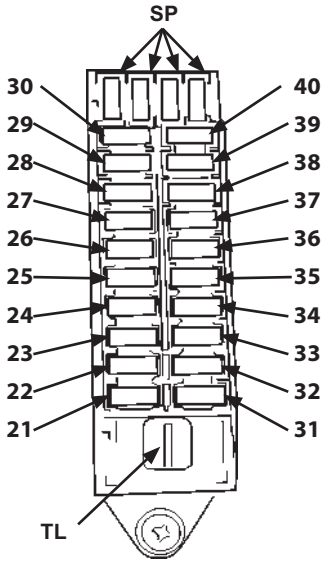

Fuse box (B)

M1GR-01-003-4-1 ja

SP: Spare fuses

TL: Tool

ZX200-7, 240-7, 300-7, 330-7 class

30-	-	40-	-
29-	EL POWER 10 A	39-	USB (12 V) 5 A
28-	MG POWER 10 A	38-	AUX 3 10 A
27-	SOKET (12 V) 10 A	37-	AUX 2 10 A
26-	AERIAL C/O (12 V) 5A	36-	DISCONNECT BACT UP 5 A
25-	PI SHUT-OFF 5 A	35-	UREA HEAT 20 A
24-	SENSOR UNIT 10 A	34-	DCU 20 A
23-	12 V UNIT 20 A	33-	WARNING LAMP 10 A
22-	CAB LAMP REAR 10 A	32-	SEAT COMPR 10 A
21-	SEAT HEATER 10 A	31-	QUICK HITCH. 5 A

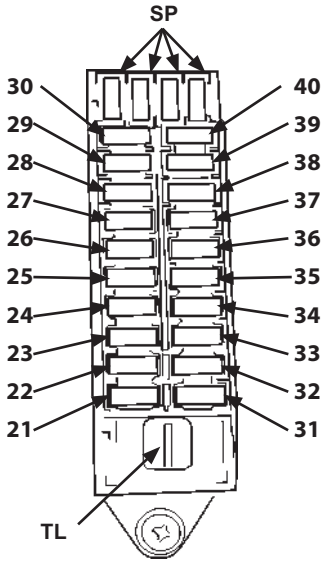

Fuse box (B)

M1GR-01-003-4-1 ja

SP: Spare fuses

TL: Tool

- Fusible Link (Main Fuse)
  In the case that the machine does not start when the key is put in the START position, the problem may be a blown fuse in the fusible link. Check and replace the fusible link.

Check and Replacement Procedure

ZX120-7, 160-7, 180-7, 200-7, 240-7 Class: Before check/replacement, open the cover on the left rear side of the machine and remove the cover next to the battery (4).

ZX300-7, ZX330-7 Class: Before check/replacement, open the cover on the left front side of the machine and remove the cover next to the air cleaner (5).

1- Fusible link
   45 A
2- Fusible link
   ZX120-7, 160-7, 180-7, 200-7, 240-7 Class: 100A
   ZX300-7, 330-7 class: 140A
3- Fusible link
   80 A

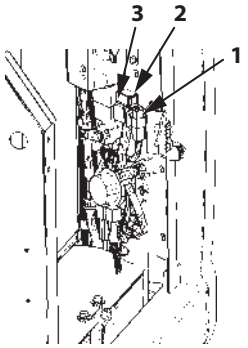

ZX120-7 class

MDFY-07-131-2 ja

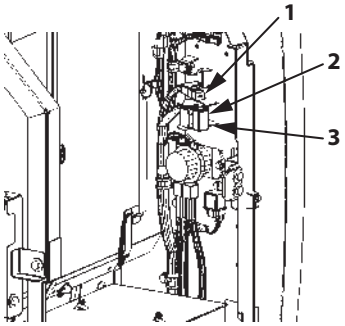

ZX160-7, 180-7 class

MDFY-01-152-1 ja

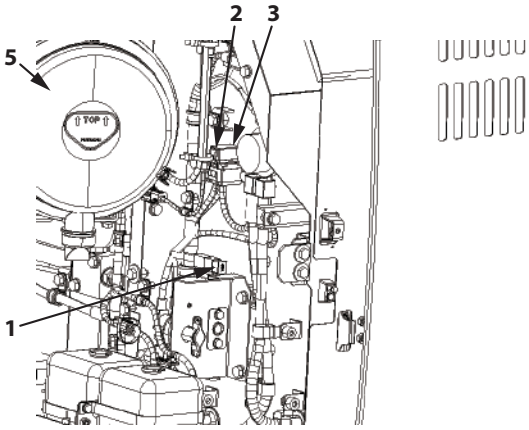

ZX300-, 330-7 class

MDFY-07-089-1 ja

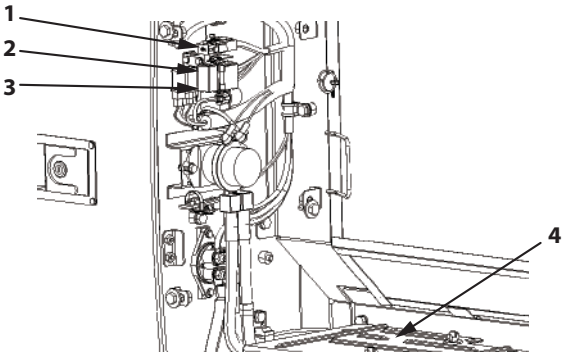

ZX200-7, 240-7 class

MDFY-07-088-1 ja

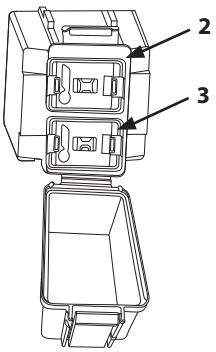

MDFY-07-091-2 ja

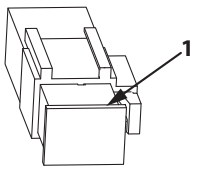

MDFY-07-090-1 ja

I. Miscellaneous

1 Check and Replace Bucket Teeth

---daily

Check bucket teeth (1) for wear and looseness.

Replace if wear is beyond the service limit in the table.

A (mm)

Model	New	Service Limit
ZX120-7, 160-7 class	166	85
ZX180-7, 200-7 class	200	95
ZX240-7, 300-7 class	230	110
ZX330-7 class	230	115

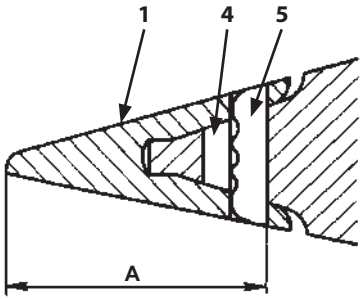

M104-07-056-1 ja

Replacement Procedure

CAUTION

- **Guard against injury from flying pieces of metal.**
- **Wear hard hat or safety glasses, and safety equipment appropriate to the job.**

1. Use hammer (2) and drift (3) to drive out lock pin (5). Take care not to damage lock rubber (4).
2. Inspect the lock pin (5) and lock rubber (4) after removing them. As shown in the diagram, short lock pins (5) and damaged lock rubber (4) must be replaced with new ones.

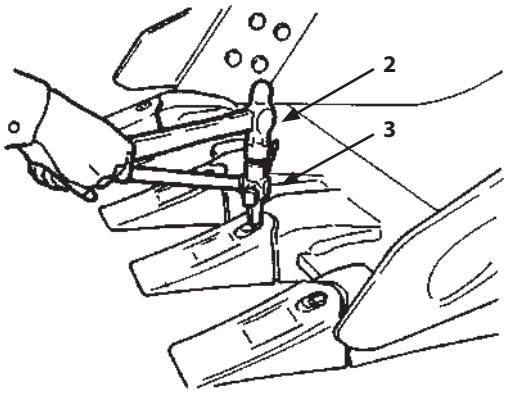

M104-07-116-1 ja

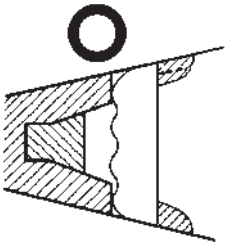

M104-07-118-2 ja

Examples of Defective Lock Pins (5) & Lock Rubbers (4)

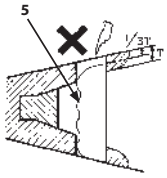	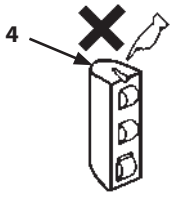	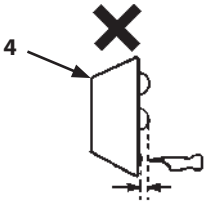
Lock pin (5) is too short	Steel ball may come out from the cracked rubber	Pressing on the protruding steel ball makes it sink in.

3. Clean shank (6) surface.
4. Install lock rubber (4) into shank (6) hole as shown.

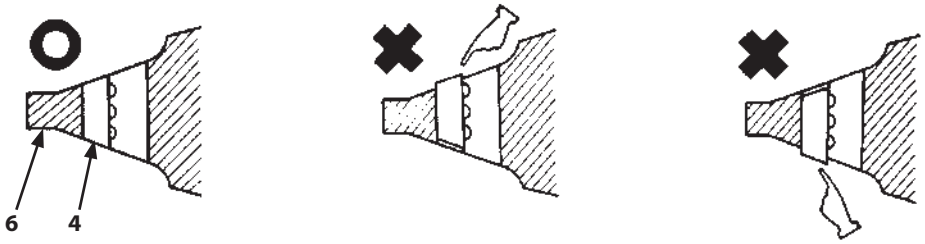

M104-07-060-2 ja

5. Position new tooth (1) over shank (6)

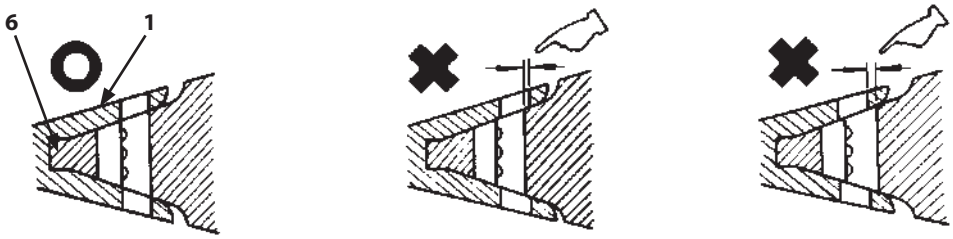

M104-07-061-2 ja

6. Drive lock pin (5) in so it is flush with the surface of tooth (1).

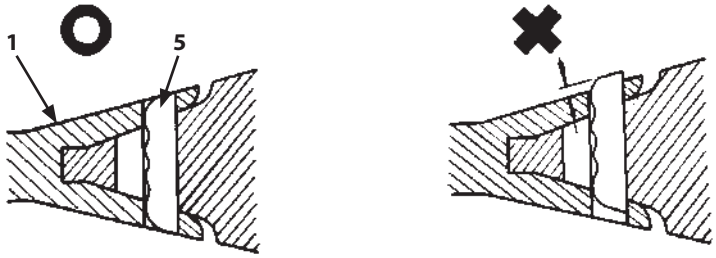

M104-07-062-2 ja

H Spec. and Super V Type Bucket Teeth

--- daily

CAUTION

Guard against injury from flying pieces of metal. Wear goggles or safety glasses, and safety equipment appropriate to the job.

Check bucket teeth (1) for wear and looseness.

When tooth (1) wear beyond the service limit, replace them.

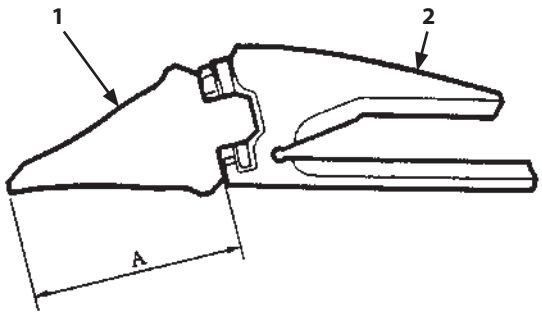

M116-07-124-1 ja

ZX330-7 class		Parts No.	New	Limit of Use
A (mm)	1.40 m^3Hoe Bucket with Super V type Bucket Teeth	4400250	232	99
	Rock Bucket 1.38 m^3 1.50 m^3	4400253	229	112

IMPORTANT

When tooth (1) is used in excess of the service limit, a hole will be made on tooth (1), which makes adapter (2) nose exposed and worn out, and will eventually break or let tooth (1) fall off.

Replacement Guide

Guide to Replacing Teeth

1. Preparations for removing tooth point
   Hit the left and right top ends and the left and right lugs of tooth (1) alternately with a hammer knock off pebbles, soil, etc., stuck in the gap between tooth (1) and adapter (2).
2. Pin Removal
   Remove pebbles, dirt, etc., completely from the gap between lock pin (3) and adapter (2). Place pin-removing jig on the top end of lock pin (3) and hit it with hammer to remove lock pin (3).
   When driving out lock pin (3), first hit with a shorter jig until top end of lock pin (3) comes to the upper end position of the lug of tooth (1) and then use the longer jig to remove lock pin.

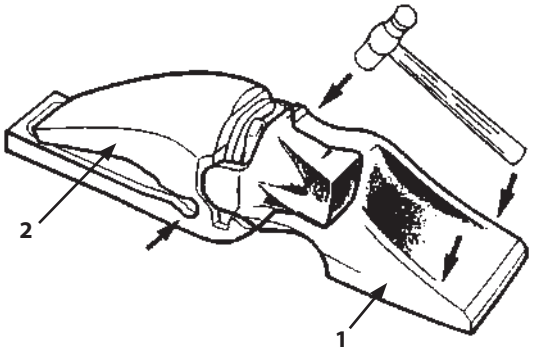

M116-07-125-1 ja

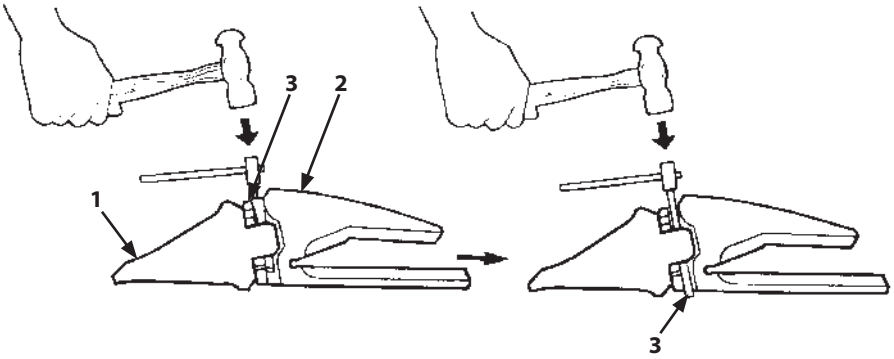

M116-07-126-1 ja

3. Tooth Removal
   Turn tooth (1) to the left and pull it out while twisting it.

IMPORTANT

Also check that lock pin (3) has no cracks. If cracked, replace it with a new one. Lock pin (3) can be reused several times per normal tooth (1), but check whether it can be reused when replacing a tooth (1).

M113-07-078-1 ja

Tooth Mounting Guide

1. Mounting the tooth
   Clean the nose mating part. In particular, clean off any dirt or debris from the tip of adapter (2) nose. Also check that lock pin (3) has no cracks.
   If pebbles, dirt, etc., are stuck to adapter nose, tooth (1) will not go in properly and pin (3) cannot be driven in.
   Insert tooth (1) slowly while twisting and turning it to the right. Insert until the tip of the nose of adapter (2) touches tooth (1).

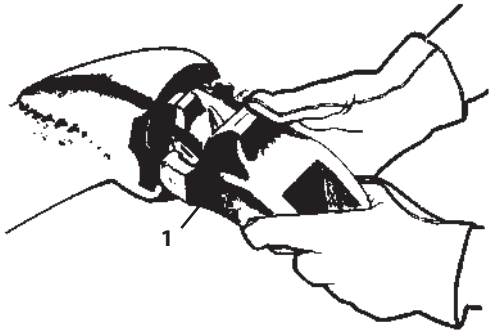

M113-07-080-1 ja

2. Inserting the lock pin
   Insert lock pin (3) with take-up (4) facing toward adapter (2) nose.
   Hammer it in with tooth (1) pressed in.
   Make sure the top of lock pin (3) (when new) is flush with the surface of the nose.
   (The take-up of lock pin (3) is shaped to fit into the groove of the tooth lugs.)

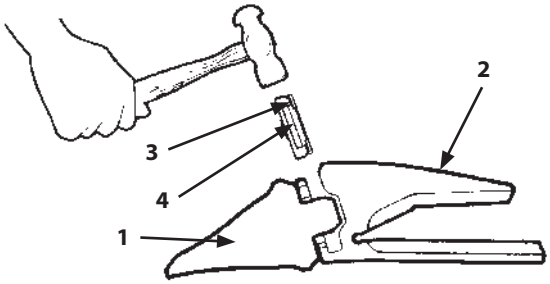

M173-07-001-2 ja

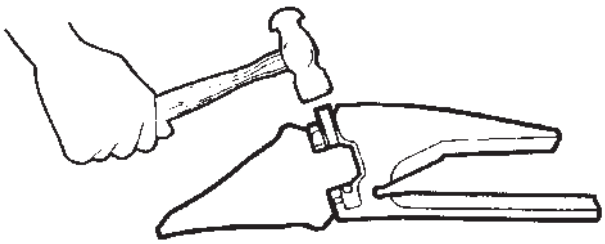

M116-07-128-1 ja

Other Precautions

1. Since lock rubber (4) is susceptible to oil-based corrosion, do not use grease, oil or other oily materials when inserting lock pin (3).
2. If mounting welding-type nose and adapter (2) onto the bucket, lock pin (3) should be removed from the nose before preheating and welding. If the lock pin is left in place, the heat will spoil lock rubber (4).

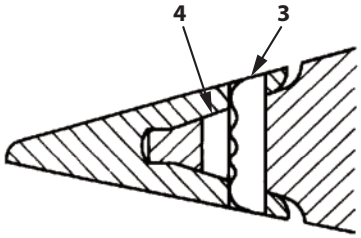

M104-07-056-2 ja

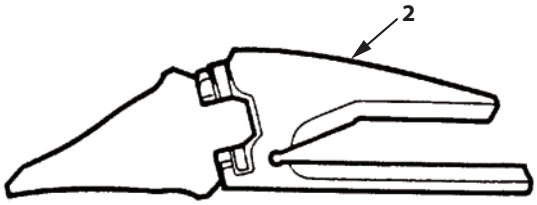

M116-07-124-3 ja

2 Change Bucket

CAUTION

When removing/mounting pins, be careful of flying pieces of metal to avoid injury. Wear goggles or safety glasses, and safety equipment appropriate for the job.

Select a roomy area with good footing, and ensure the safety of anyone in the area while working. Slowly move the front attachment. When using a signal person, coordinate hand signals before starting.

Removal

1. Place the bucket in a stable position.
2. Slide O-ring (1) out of its normal position toward the boss side of bucket (2).
3. Remove bucket pins A and B to separate the arm and bucket.

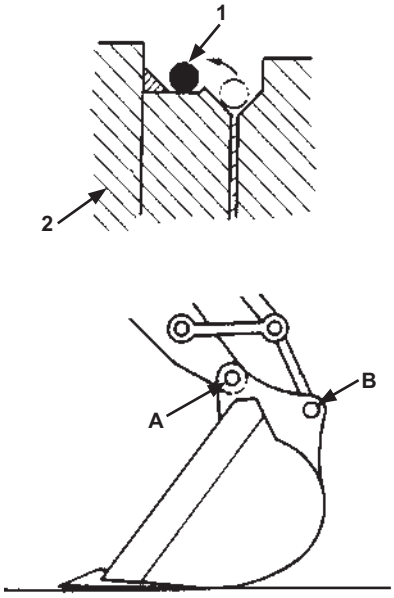

M104-07-063-2 ja

Mounting

1. Clean the pins and pin bores. Apply sufficient grease to the pins and pin bores.
2. Place the new bucket in stable position as shown in the figure.
3. Fit the arm to hole A and link (3) to hole B with the pins.
4. Install the locking pins and snap rings on each pin.
5. Install O-rings (1) to the specified positions.
6. Apply grease to each pin.
7. Start the engine and run it at slow idle. Slowly operate the bucket in both directions to check for any interference in bucket movement.

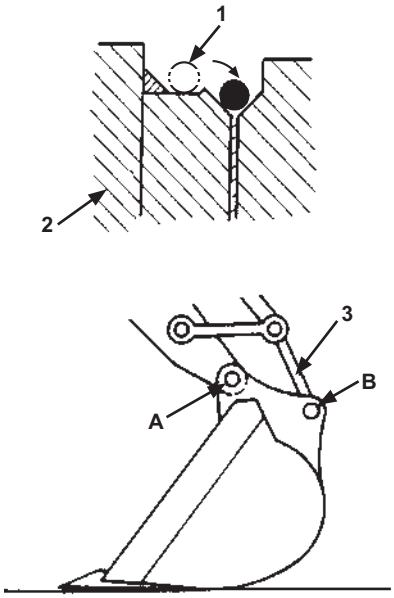

M104-07-063-3 ja

3 Convert Bucket Connection Into Face Shovel

CAUTION

When removing/mounting pins, be careful of flying pieces of metal to avoid injury. Wear goggles or safety glasses, and safety equipment appropriate for the job.

Converting the bucket connection allows you to use the machine as a face shovel. Select a roomy area with good footing, and ensure the safety of anyone in the area while working. Slowly move the front attachment. When using a signal person, coordinate hand signals before starting.

Guide to Inverting Bucket

1. Place the bucket in a stable position.
2. Slide O-ring (1) out of its normal position toward the boss side of bucket (2).
3. Remove bucket pins A and B to separate the arm and bucket.
   Clean the pins and pin bores. Apply sufficient grease to the pins and pin bores.
4. Invert the bucket so it is in a stable position as shown in the figure.
5. Fit the arm to hole B and link (3) to hole A with the pins.
6. Install the locking pins and snap rings on each pin.
7. Install O-rings (1) to the specified positions.
8. Apply grease to each pin.
9. Start the engine and run it at slow idle. Slowly operate the bucket in both directions to check for any interference in bucket movement.

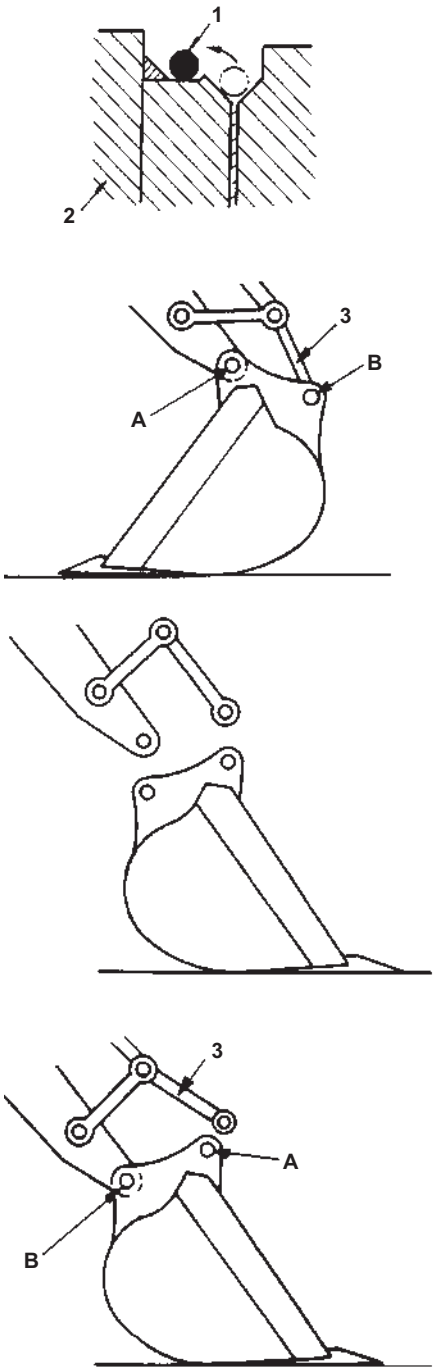

M104-07-064-2 ja

4 Adjust Bucket Linkage

The machine is provided with a bucket adjustment system to take up play in the linkage. When the gap between the bucket and the boss at the tip of the arm gets too big, adjust it as follows.

1. Place the bucket in stable position as shown in the figure.
2. Turn it ever so slightly counter-clockwise and press gently on the arm tip boss to the left side of the bucket (side without the gap adjusting mechanism).
3. Stop the engine and put the pilot shut-off lever in the LOCK position.
4. Slightly loosen 3 bolts (1) using a 22 mm wrench. Remove all shims (2) from gap (c) between plate (3) and bucket. As shim (2) is a dual partitioning type, it can be easily removed by slightly loosening bolt (1) and inserting the tip of a screw driver in the gap between the left and right shims (2).
5. Pressing on the head of bolt (1) by hand eliminates gap (a) and gap (b) gets larger by that amount; put as many of the shims (2) just removed into gap (b) as possible, without forcing it.
6. Install remaining shims (2) into gap (c) and tighten bolts (1) to 140 N·m (14 kgf·m).

NOTE

The total number of shims (2) used in gap (b) and (c) are 6×2=12. Forgetting to return the remaining shims (2) into gap (c) in step 6 above will cause the end of bolt (1) to stick out and it may scratch the end of the arm tip boss (4) and/or damage the bolt. When the end face of boss (4) wears such that groove (d) for the O-ring reaches 5 mm, replace boss (4) with a new one.

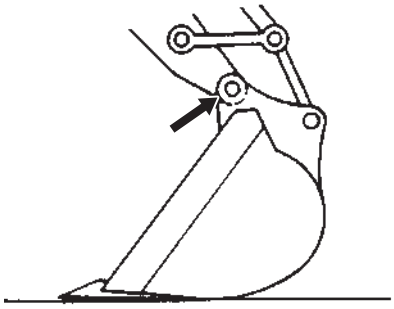

M503-07-056-2 ja

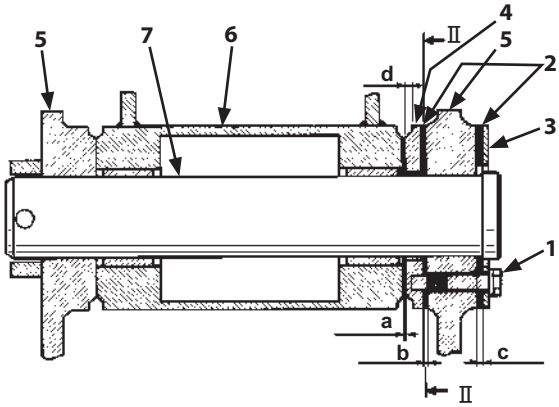

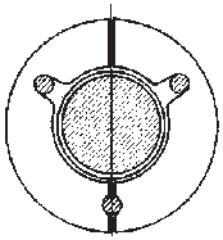

Shim Shape (Cross-section II)

M1G6-07-010-2 ja

a	Gap	3	Plate
b	Gap	4	Boss
c	Gap	5	Bucket
d	Groove width	6	Arm Tip Boss
1	Bolts	7	Pin
2	Shim		

5 Remove Travel Levers

The machine can be operated with just the travel pedals. However, its operability suffers compared to using the levers.

How to Remove Travel Levers

Remove 2 each of bolts (1) and (2) to remove travel levers (3) and (4) from the brackets.

NOTE

Wrench size: 17 mm
Tightening Torque: 50 N·m (5 kgf·m)

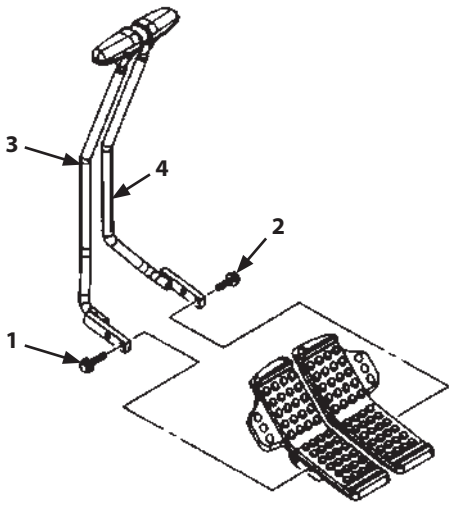

M178-07-077-1 ja

6 Check and Replace Seat Belt

Check --- daily

Replace --- every 3 years

Prior to operating the machine, thoroughly examine belt (5), buckle (6) and attaching hardware (7). If any item is damaged or substantially worn, replace seat belt or components before operating the machine. We recommend that seat belt (5) be replaced every 3 years regardless of its apparent condition.

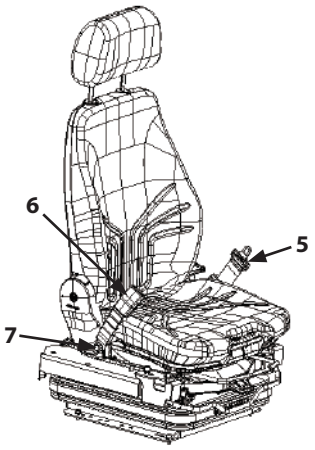

MDFY-07-037-1 ja

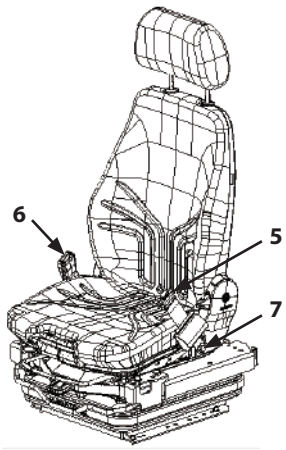

MDFY-07-038-1 ja

7 Clean Mobile Phone (Smartphone) Holder

--- as required

A mobile phone (smartphone) holder (1) is provided to the front right of the operator's seat.
The holder can be removed by pulling towards you while raising part A.
Once removed, holder (1) can be washed.
For washing, use a neutral detergent.

To reattach, follow the procedure below.

1. Press hook (2) into attachment part (5).
2. Press hook (4) into attachment part (7) while simultaneously pressing hook (3) into attachment part (6).

Repeated removal and reattachment will wear out the hook parts.

If holder (1) can no longer be securely attached, it should be replaced.

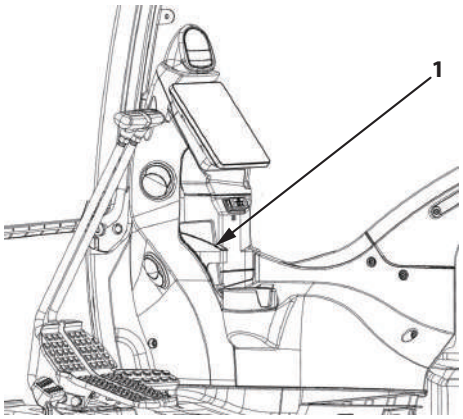

MDFY-07-065-1 ja

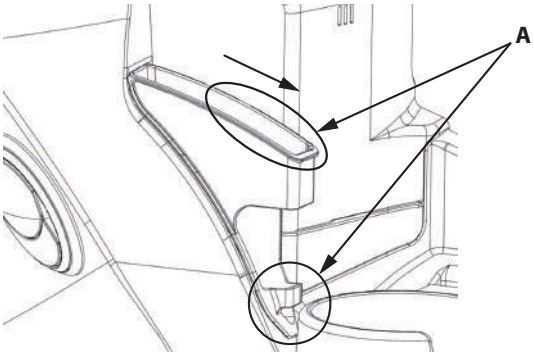

MDFY-07-066-1 ja

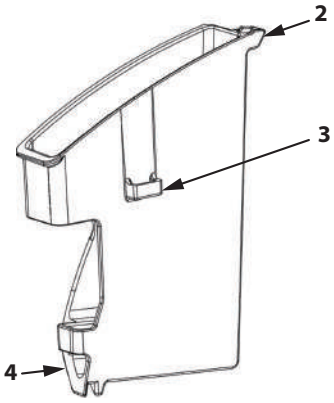

MDFY-07-067-1 ja

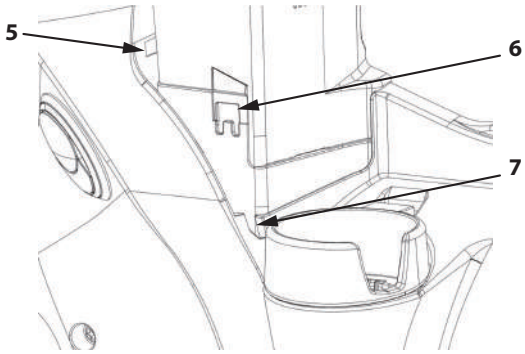

MDFY-07-068-1 ja

8 Clean Drink Holder

--- as required

Drink holder (1) is attached to the front right of the operator's seat. It can be removed by inserting fingers into handle part A and pulling towards you.

Once removed, drink holder (1) can be washed. For washing, use a neutral detergent.

When reattaching, press drink holder (1) straight into cover (2). While pressing, ensure that hooks (3) on the side surface of drink holder (1) locate in groove (4) of cover (2).

Repeated removal and reattachment will wear out hooks (5).

If drink holder (1) can no longer be securely attached, it should be replaced.

IMPORTANT

If the drink holder is forced into the cover at an angle, the hook parts may break.

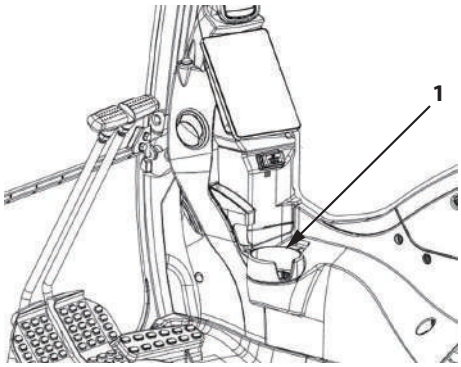

MDFY-07-069-1 ja

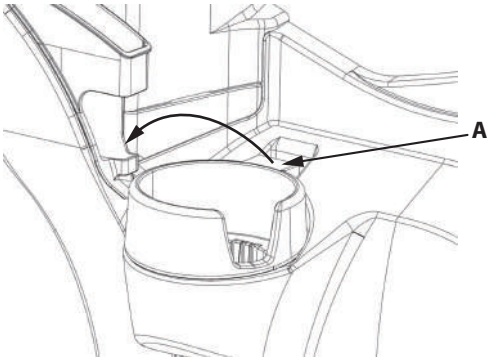

MDFY-07-070-1 ja

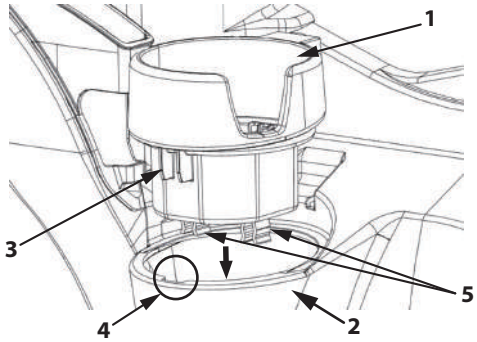

MDFY-07-071-1 ja

9 Clean Storage Pocket

--- as required

If storage pocket (1) is mounted in the console, it can be removed for cleaning by unscrewing screw (2). For washing, use water or a neutral detergent.

NOTE

In the case that the machine has been fitted out with other options, pocket (1) may be mounted in a different position or not be provided at all.

When reattaching, fit the hooks on pocket (1) into holes (3) provided in the cover.

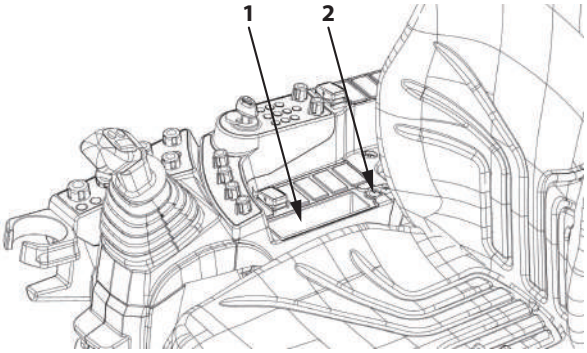

MDFY-07-072-1 ja

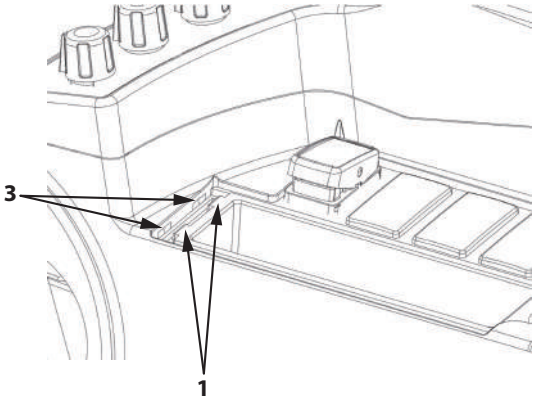

MDFY-07-073-1 ja

10 Wide View Wiper Maintenance

. . . As required

To ensure good visibility at all times, replace the wiper blade when it wears out.
If the wiper blade is dirtied by mud or dirt, it will not perform at the optimum level.
Use water and a neutral detergent to clean away the dirt.

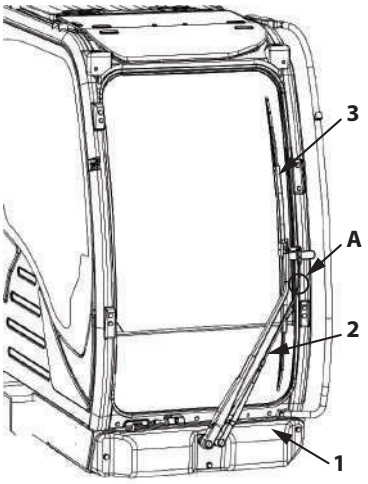

MDFY-07-074-1 ja

CAUTION

- **Do not stand on metal cover (1) in front of the operator's station. There is a risk of falling off.**
- **During maintenance of the wiper or window glass, do not stand on anything unstable, such as on the undercarriage. Use a step ladder or the like to ensure stable footing.**

To stand up the wiper arm, grip in the region of the upper portion A of narrow arm (2) and move with a smooth motion.

CAUTION

- **When standing up the wiper arm, the tips of wiper blade (3) will move significantly. Check there are no people or objects in the immediate vicinity before moving.**
- **When lifting up wiper arm (2) and putting it back, make sure wiper blade (3) is not blocking wiper arm (2). Forcing it to move may damage wiper blade (3).**
- **When putting wiper arm (2) back in position, do so carefully until wiper blade (3) touches the glass. Putting wiper arm (2) back carelessly may damage the blade and/or the glass.**

Replace Wide View Wiper Blade

As the rubber of wiper blade is integrated with the wiper frame, the entire frame must be replaced.
The replacement blade consists of components (1) to (8). Be sure to replace all of the corresponding old components with new ones.

1. Remove bolt (2) and nut (3) that secure wiper blade (1).
2. Separate wiper blade (1) from wiper arm (10) and replace with the new part.
3. Fit new wiper blade (1) onto wiper arm (10), sandwiching resin spacer (5) in between. Fit metal spring (6) onto resin spacer (5) with the open end of the spring pointing upwards.
   Make sure the end part of the spring hooks onto part A of resin spacer (5).

IMPORTANT

When fitting metal spring (6) onto resin spacer (5), be sure to pay attention to the instruction about the fitting orientation.
If metal spring (6) is not correctly orientated, the wiper blade will snag on the window frame when the front window is opened and closed, potentially damaging the blade.

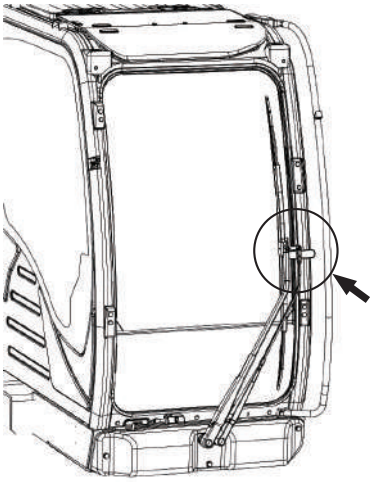

MDFY-07-074-2 ja

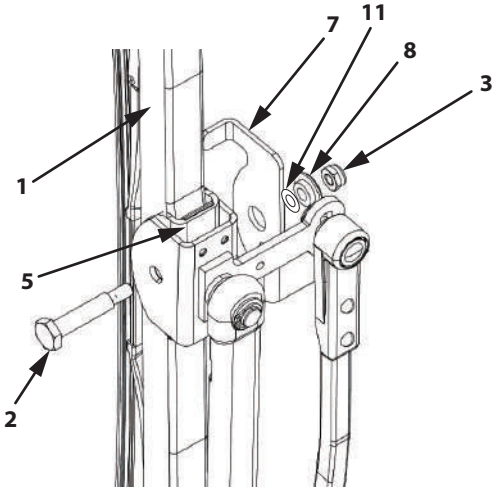

MDFY-07-075-3 ja

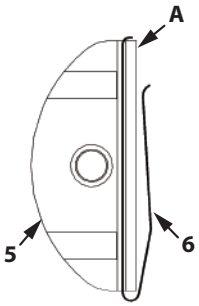

MDFY-07-094-1 ja

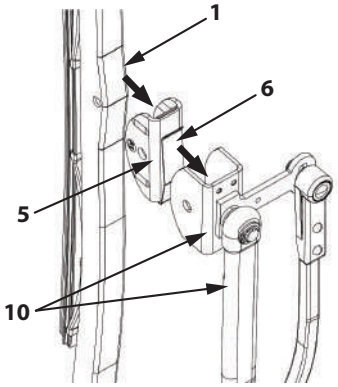

MDFY-07-076-1 ja

4. Insert bolt (2) through the hole in wiper arm (10), resin spacer (5), bracket (7), spacer (8) and shim (11), and secure with nut (3).
   When tightening bolt (2) and nut (3), check that there are not gaps at A or B.
   If the bolt is tightened when such a gap is present, it may not be possible to securely attach the blade.

   Nut (3) tightening torque: 10 N・m (1 kgf・m)

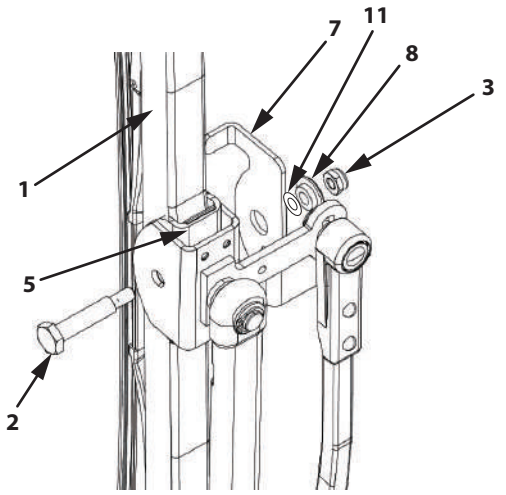

MDFY-07-075-3 ja

5. If the window frame and blade (1) are not parallel, adjust the angle of the blade by loosening nut (9) located behind wiper arm (10).
   After adjusting the angle of the blade, retighten nut (9) to secure.

   Nut (9) tightening torque: 10 N・m (1 kgf・m)

   If the wiper blade is used without correcting the tilt and it makes contact with the window frame or pillar, the wiper system may break down. Check that the blade does not make contact with the window frame or pillar when the wiper system is stopped or when it is operating.

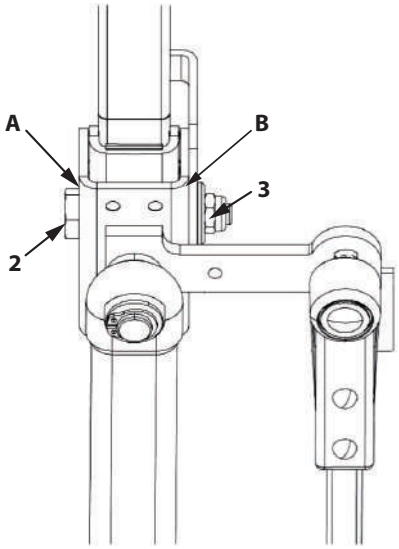

MDFY-07-077-1 ja

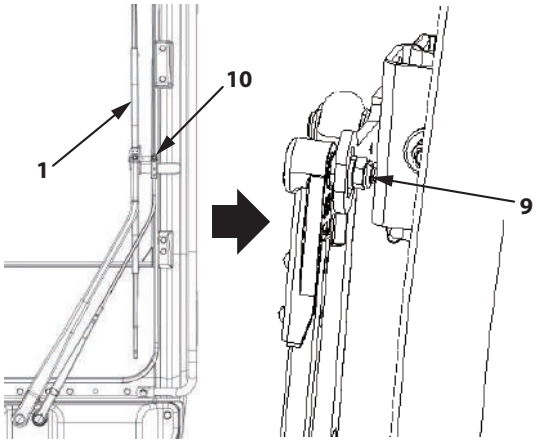

MDFY-07-078-1 ja

11 Clean Rain Visor

. . . As required

IMPORTANT

- **When cleaning rain visor (1), use a neutral detergent. If an acidic or alkaline detergent is used, the rain visor may become discolored or crack.**
- **Keep organic solvents away from rain visor (1). Contact with such solvents may cause the rain visor to become discolored or crack.**
- **When cleaning rain visor (1), do not stand on anything unstable, such as on the undercarriage. Use a step ladder or the like to ensure stable footing.**

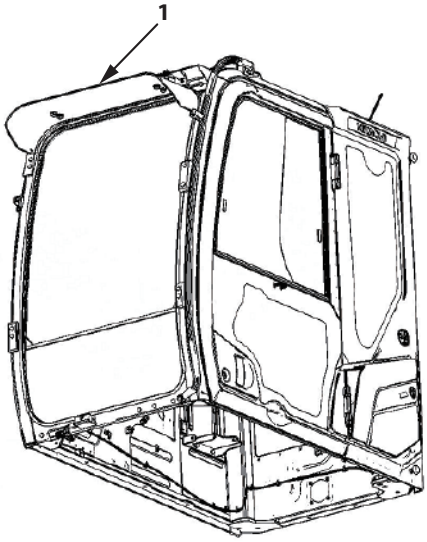

MDFY-07-079-1 ja

12 Grease Cab Door Hinge

--- as required

If the door does not open and close smoothly, apply a suitable amount of lubricant to hinge (2).
If this does not improve matters or the lock cannot be engaged securely, the hinge may be damaged.
Stop using the door and contact your authorized dealer.

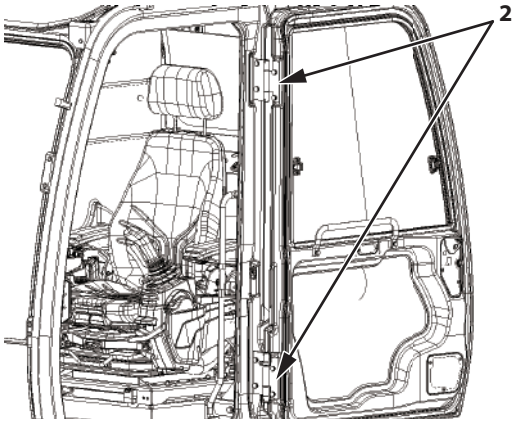

MDFY-07-111-1 ja

13 Grease Console Height Adjustment Pin

. . . As required

If console height adjustment lever (1) fails to move smoothly, apply lubricant to lock pin (2) and/or the hole in lock bracket (3) as needed.
If this does not improve matters or the lock cannot be engaged securely, the hinge may be damaged. Stop using the door and contact your authorized dealer.

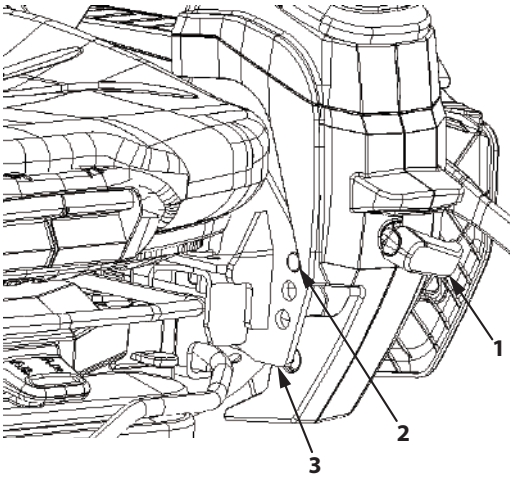

MDFY-01-033-1 ja

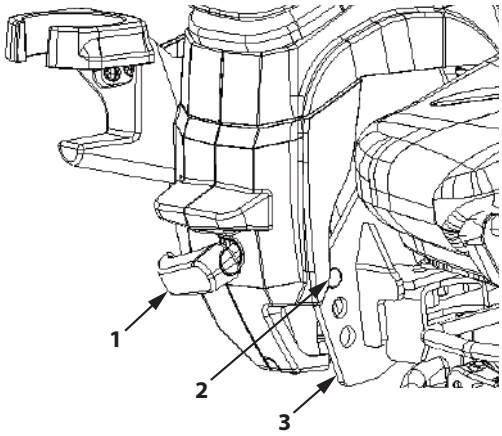

MDFY-01-034-1 ja

14 Check Windshield Washer Fluid Level

. . . As required

Check the level of washer in washer tank (1) and if the level is low, remove cap (2) and add fluid via the opening.

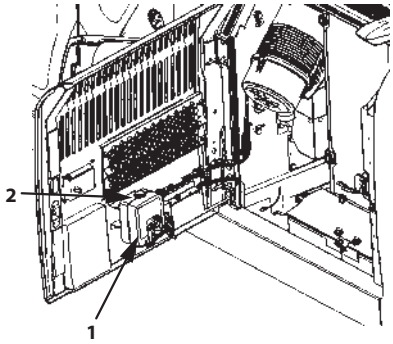

ZX120-7 class

MDFY-07-132-1 ja

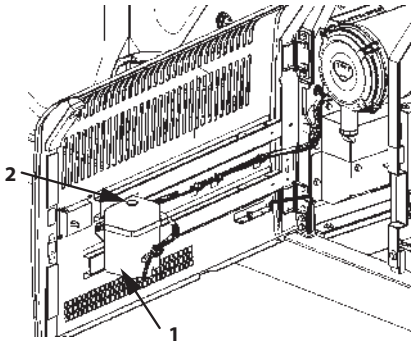

ZX160-7, 180-7 class

MDFY-01-153-1 ja

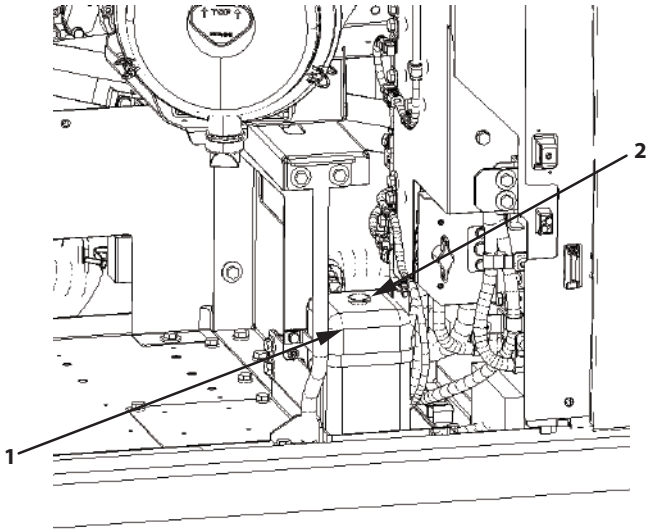

ZX300-7, 330-7 class

MDFY-07-081-1 ja

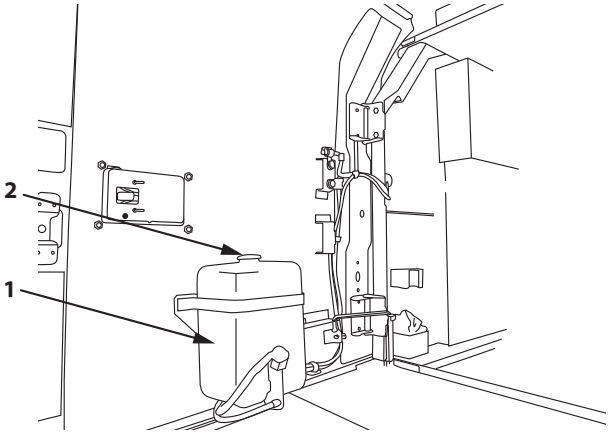

ZX200-7, 240-7 class

MDFY-07-080-1 ja

15 Check & Adjust Track Sag

--- every 50 hours

If the amount of sag is inappropriate, the tracks may flap around or come off. This in turn may damage the track itself and other parts.
As such issues will have an effect on the lifetime of the machine, be sure to adjust the sag of the tracks to a suitable amount.
To measure or adjust the tracks, park the machine on firm and level ground.

Procedure for Measuring Raised Tracks

1. Raise a track as illustrated at right to measure its sag, and support it securely with blocks or the like.

   CAUTION

   Take care that no hands, feet, or other body parts are put beneath the track.

M104-07-067 ja

2. Remove any deposits on mating parts of the tracks and undercarriage (top/bottom rollers, idler, sprockets).

   IMPORTANT

   Accurate measurements cannot be taken if there are deposits on mating parts of the tracks and undercarriage (top/bottom rollers, idler, sprockets).

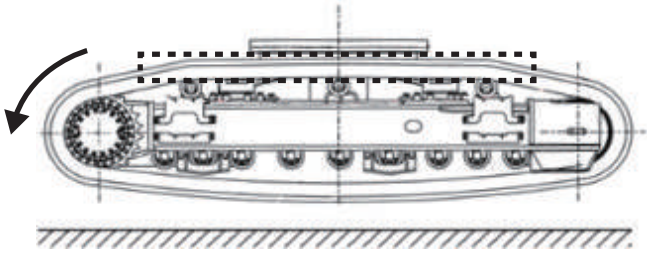

MDFY-07-149-1 ja

3. Rotate the track in reverse to eliminate track looseness on the upper side of the side frame.
4. As illustrated at right, take measurements midway (A) between the reduction gear and the idler (bottom of side frame to top of shoe).

Model	Appropriate sag A (mm)
ZX120-7 class	250 to 280
ZX160-7 class	285 to 320
ZX180-7, 200-7, 240-7 class	300 to 335
ZX300-7, 330-7 class	340 to 380

If track sag is not within specifications, loosen or tighten the track.

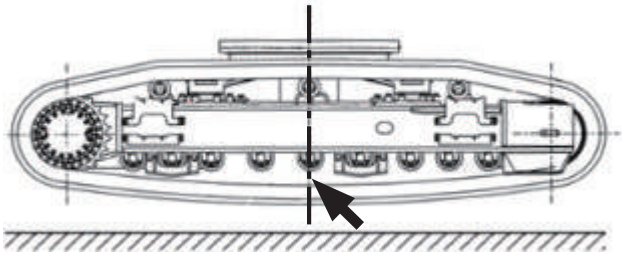

MDFY-07-149-2 ja

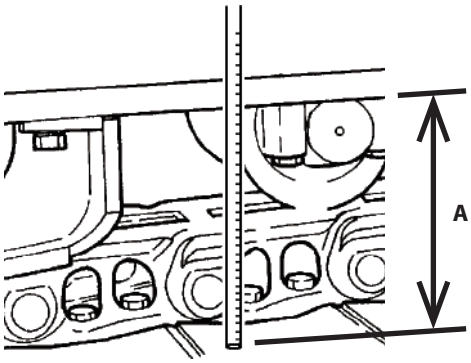

MDFY-07-150-1 ja

Adjust Track Sag

1. Adjust the tracks one at a time, with the track in the air. When doing so, be sure to place blocks under the machine frame to support the machine.
2. After adjusting the sag on both track, rotate the tracks backward and forward to equalize the sag on both sides.
3. Recheck the track sag one more time. Readjust as necessary.

If raising a track to measure it is not possible, measure it via the “Simple Procedure” described below. However, we recommend using the “Procedure for Measuring Raised Tracks”. This is because the accuracy of sag adjustments made using “Simple Procedure” measurements are not as accurate as via the “Procedure for Measuring Raised Tracks”.

Simple Maintenance Procedure

1. Remove any deposits on mating parts of the tracks and undercarriage (top/bottom rollers, idler, sprockets).

IMPORTANT

Accurate measurements cannot be taken if there are deposits on mating parts of the tracks and undercarriage (top/bottom rollers, idler, sprockets).

2. Move forward in the direction of idler (1), traveling a distance equivalent to at least the length of ground contact by the machine.
3. Stop the machine in a state where one of the track pins (4) is directly over upper roller (2).
4. As shown in the illustration to the right, place the straight rod (3) (squared timber etc.) on the section of track between idler (1) and upper roller (2).
5. Measure the maximum sag between the upper surface of the track and the bottom surface of the rod. (Dimension B in the illustration)

Model	Correct Amount of Sag B (mm)
ZX120-7 class (Except ZX130LCN-7)	20 to 40
ZX130LCN-7 ZX160-7, 180-7, 200-7, 240-7, 300-7, 330-7 class	15 to 35

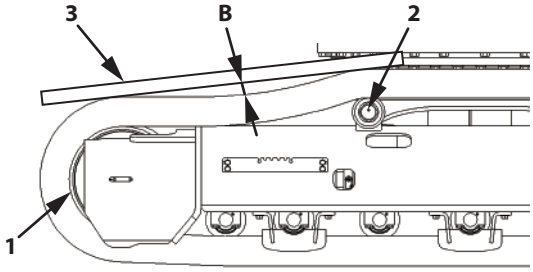

MDFY-07-100-1 ja

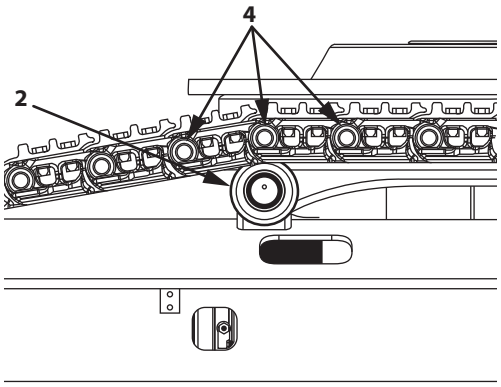

MDFY-07-101-1 ja

Adjust Track Sag

1. If track sag is not within the specified range, adjust it by loosening or tightening the track (refer to the procedures on the next page).
2. After adjusting the sag on both track, rotate the tracks backward and forward to equalize the sag on both sides.
3. Recheck the track sag one more time. Readjust as necessary.

CAUTION

When adjusting the sage with the track raised, be sure to place blocks under the machine frame to support the machine. During adjustment, never put hands, feet, or other parts of the body beneath the track.

Loosening the Track (Steel Crawler)

1. Use a 24 mm hex socket on the body of valve (1) and loosen the entire valve a little at a time; when grease is expelled, the track is loose.

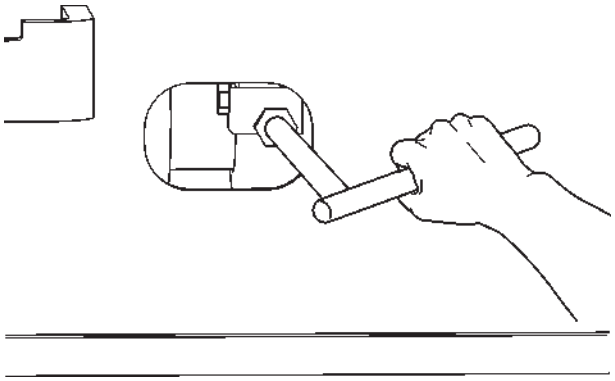

MDAA-07-013 ja

CAUTION

- **The pressure inside the cylinder of the track adjuster is high. Do not loosen valve (1) quickly or loosen it too much as valve (1) may fly off or high-pressure grease in the adjusting cylinder may spout out. Slowly loosen valve (1) while keeping body parts and face away from valve. Never loosen grease fitting (2).**
- **Take care that no hands, feet, or other body parts are put beneath the track.**

IMPORTANT

When gravel or mud is packed between sprockets and track links, remove it before loosening.

2. Between 1 to 1.5 turns of valve (1) are sufficient to loosen the track. When valve (1) comes in contact with stop plate (3), do not loosen the valve further. When valve (1) is loosened, grease is expelled from part A.
3. If grease is not expelled readily, raise the track to be loosened off the ground and slowly rotate the track.
4. When proper track sag is obtained, turn valve (1) clockwise to the original state.
   Tightening Torque: 90 N·m (9 kgf·m)

   Do not remove valve stop plate (3). Do not loosen bolt (4) while adjusting the track sag.

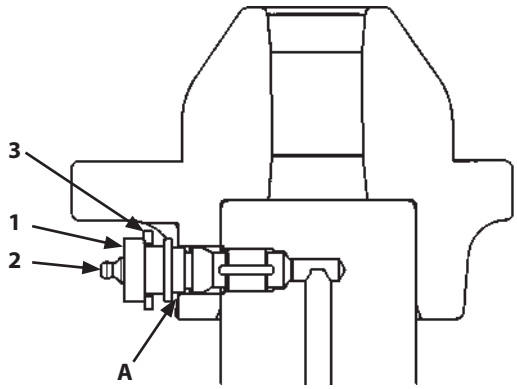

MDAA-07-014-2 ja

CAUTION

If grease is not expelled properly, contact your authorized dealer.

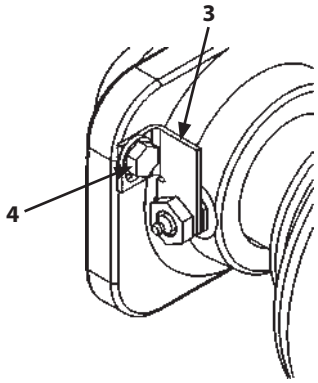

MDAA-07-057-3 ja

Tightening the Track (Steel Crawler)

CAUTION

It is abnormal if the track cannot be adjusted. A strong force acts on the spring in the track adjuster so the grease in the cylinder is at high pressure. Improper handling during adjustment or disassembly is extremely dangerous and could result in serious injury or death. Consult the authorized dealer for repairs.

To tighten the track, connect a grease gun to grease fitting (2) and add grease until the sag is within specifications.

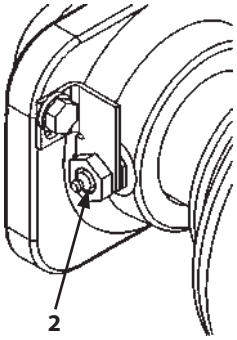

MDAA-07-057-2 ja

16 Clean and Replace Air Conditioner Filter

Clean Circulating/Fresh Air Filters

Circulating Air Filter --- every 500 hours

Fresh Air Filter --- every 500 hours

Replace Circulating/Fresh Air Filters

Circulating Air Filter --- After cleaning 6 times or so

Fresh Air Filter --- After cleaning 6 times or so

Removing Fresh Air Filter

CAUTION

- **Dust may be dispersed when using compressed air to clean the filter elements. Airborne dust may get into your eyes or on your skin or may be inhaled, potentially adversely affecting your health. Conduct the cleaning outdoor or in a ventilated area. Use appropriate protective equipment.**

IMPORTANT

- **Maximum air pressure for cleaning is 0.2MPa(2kgf/cm2).**
- **Repetitive cleaning will degrade filter performance, which may lead to decrease in dust collecting performance If degraded filter performance is suspected, replace the filter element.**

1. Insert the key into keyhole (2) on left cab side cover (1). Then, rotate the key counterclockwise to unlock the key. Open cover (1).

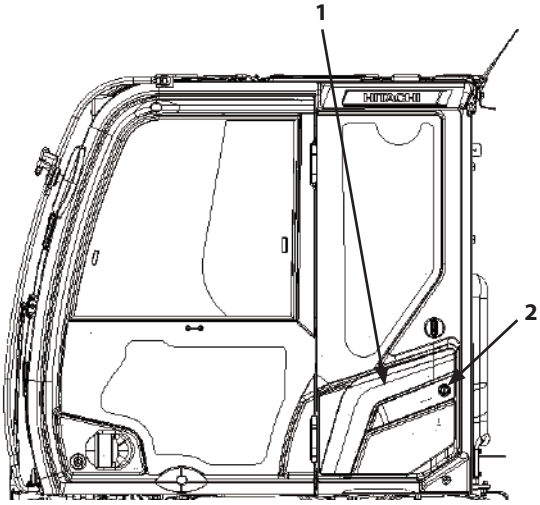

MDFY-07-039-1 ja

2. While pressing knobs (4) on both sides of fresh air filter (3) inward, horizontally remove fresh air filter.

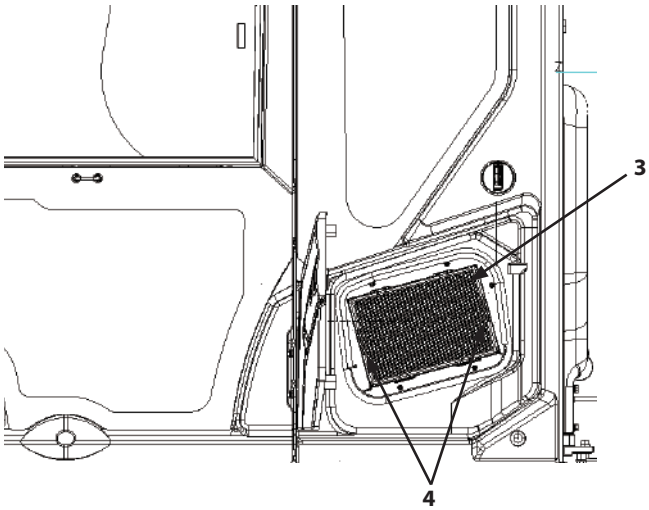

MDFY-07-040-1 ja

Removing Circulating Air Filter

1. Circulating air filter (5) is located under the rear tray.
2. Holding grips (6), pull them towards you to remove.

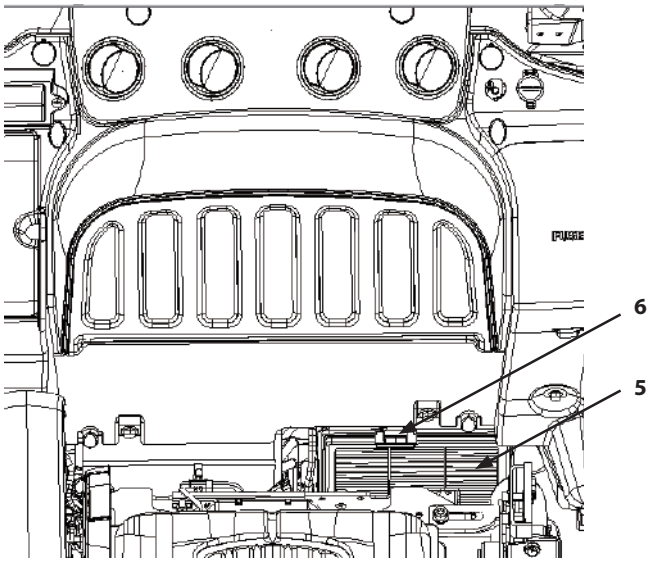

MDFY-07-041-1 ja

Cleaning

Clean the circulating and fresh air filter elements.

Clean both the circulating and fresh air filter elements by blowing compressed air from the clean side at less than 0.2 MPa (2kgf/cm2) or by submerging in water.

Washing procedure with water is as follows:

1. Use tap water.
2. Submerge the filters in water containing a neutral detergent for about 5 minutes.
3. Flush the filters with water from the clean side to remove dirt and detergent.
4. Dry the filter elements.

Installation

When installing the cleaned circulating/fresh air filters or new filters, follow the reverse order of the Removing Filter procedures described on the previous page.

17 Check Air Conditioner

--- every 250 hours or 3 months

Check pipe connections for refrigerant gas leakage

If oil seepage is found around pipe joints (A,B), it indicates possible gas leakage.

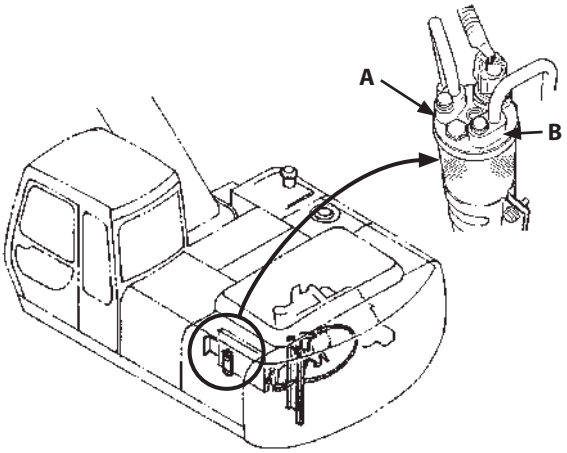

M1CD-07-038-2 ja

Check Refrigerant

Increase engine RPM to 1500 min^{-1} and operate the air conditioner for 2 to 3 minutes at max cooling (18°C displayed on the monitor) and then check if cool air comes out from the vent in the cab.

Type and Amount of Refrigerant when Shipped

Model	Type	Refrigerant Qty.
ZX120-7,160-7,180-7,200-7, 240-7,300-7,330-7 class	HFC134a	0.85±0.05 kg

IMPORTANT

For collection/refilling of refrigerant during checks and maintenance (including disposal), contact a company certified to handle refrigerant or your nearest authorized dealer.

Check the condenser

If the condenser fins become clogged with dirt or insects, their cooling efficiency is compromised.
Be sure to keep it clean at all times. (Refer to the section Clean Radiator, Oil Cooler and Intercooler Core.)

Check compressor

After operating the air conditioner for 5 to 10 minutes, touch both the high pressure pipe and the low pressure pipe. If normal, the high pressure side pipe will be hot, and the low pressure side cold.

Check mounting bolts for looseness

Confirm that the compressor mounting bolts and other mounting/fastening bolts are securely tightened.

Inspect belt, check and adjust tension

(Except ZX120-7 class)

--- every 250 hours

Check the compressor belt for wear and looseness.

Check belt tension by pressing down in the middle with your thumb at a force of approximately 98 N (10 kgf). Deflection must be within the value illustrated at right.

If anything abnormal is found, contact your authorized dealer for a detailed inspection.

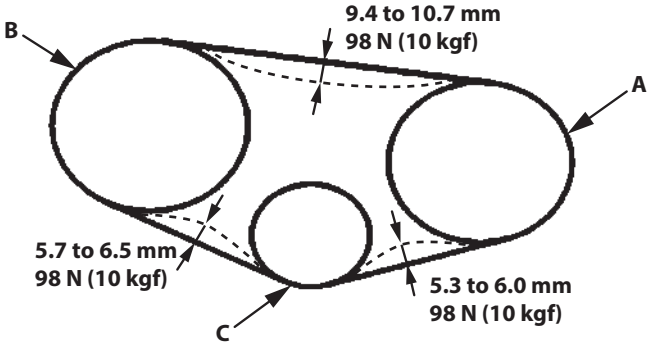

ZX160-7, 180-7 class
(Inspect 1 of the 3 locations)

MDFY-01-154-1 en_GB

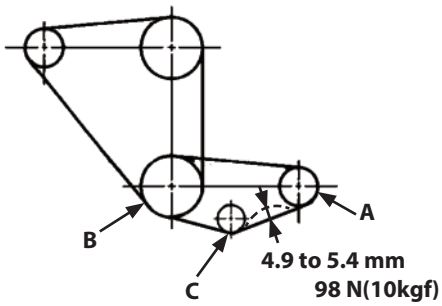

ZX200-7, 240-7 class

MDFY-07-018-1 en_GB

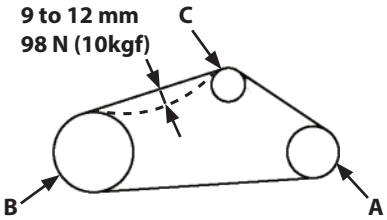

ZX300-7, 330-7 class

MDAA-07-030-3 en_GB

A	Compressor pulley	C	Tension pulley
B	Crank pulley		

Adjusting Compressor Belt Tension (Except ZX120-7 class)

1. Loosen lock nut (2) of tension pulley (1).
2. Move tension pulley (1) by adjusting bolt (3) under tension pulley (1) until tension is correct.
3. Securely tighten bolt (2) of tension pulley (1).
4. After that, tighten adjusting bolt (3).

IMPORTANT

When a new belt is installed, be sure to re-adjust the tension after operating the engine for 3 to 5 minutes at slow idle speed to be sure that the new belt is seated correctly.

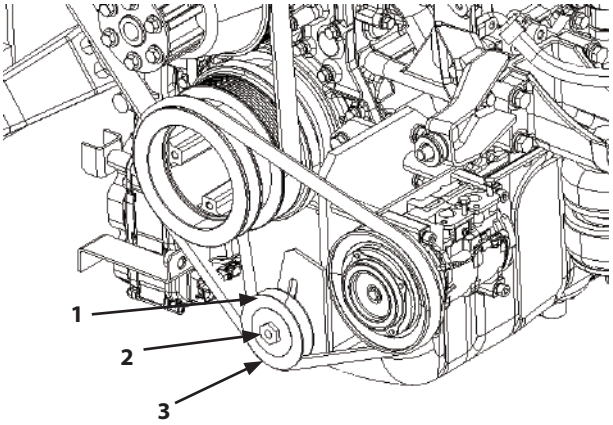

MDFY-07-042-1 ja

18 Clean Cab Floor

--- as required

IMPORTANT

Water can be used for cleaning inside the cab only for the floor. Take care not to splash the surrounding area. Do not increase water spray speed by restricting the hose end, and do not use high pressure steam for cleaning. Be sure to completely remove any moisture from the surrounding area.

1. Park the machine according to the instructions in Preparations for Inspection and Maintenance (7-8).
2. Sweep the cab floor clean using a brush, and brush dust from the cab floor while spraying water.
3. When cleaning the floor mat, sweep dust (water) along the grooves on the floor mat.
4. When the floor mat has been removed for cleaning, sweep dust (water) through the cleaning hole (1 location).

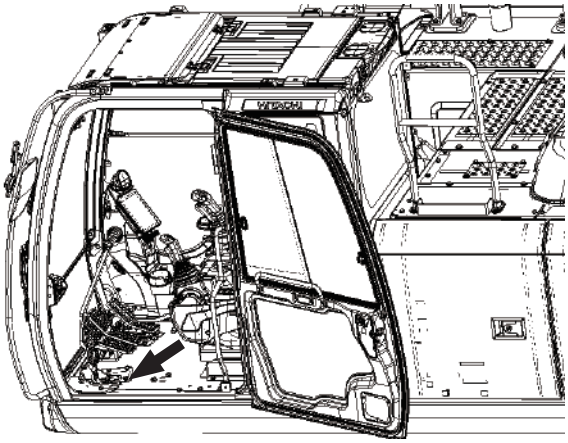

MDFY-07-043-1 ja

CAUTION

If the floor mat has been removed for cleaning, confirm that the connectors on the floor mat are securely engaged and that the floor mat is not interfering with any of the pedals.
If the floor mat is fitted incorrectly and interferes with the pedal, mistakes may occur when operating the machine. There is also a risk that it could snag when raising or lowering the operator's seat and pitch the operator from the seat.

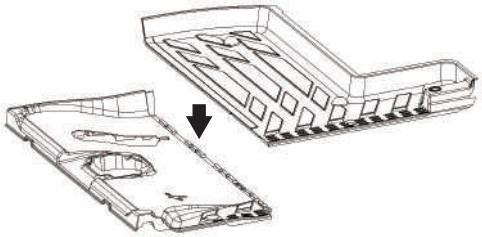

MDFY-07-110 ja

19 Retighten Engine Cylinder Head Bolt

(Except ZX120-7, 160-7, 180-7 class)
. . . As required
Consult your authorized dealer for repairs.

20 Inspect and Adjust Valve Clearance

(Except ZX120-7 class)
---every 1000 hours
Consult your authorized dealer for repairs.

21 Measure Engine Compression Pressure

(Except ZX120-7, 160-7, 180-7 class)
---every 1000 hours
Consult your authorized dealer for repairs.

22 Check Starter and Alternator

(Except ZX160-7, 180-7 class)
---every 1000 hours
Consult your authorized dealer for repairs.

23 Check and Clean EGR Valve

(Except ZX120-7 class)
--- every 4500 hours
Consult your authorized dealer for repairs.

24 EGR Cooler Cleaning

(Except ZX120-7 class)
---every 4500 hours
Consult your authorized dealer for repairs.

25 Check Turbo Charger

(Except ZX120-7 class)
---every 4500 hours
Consult your authorized dealer for repairs.

26 Check and Clean Injector

(Except ZX120-7 class)
--- every 4500 hours

Consult your authorized dealer for repairs.

27 Check ECM and Related Sensors and Actuators

(Only ZX160-7, 180-7 class)
---every 4500 hours

Consult your authorized dealer for repairs.

28 Check Aftertreatment Device and Related Sensors and Actuators

(Only ZX160-7, 180-7 class)
---every 4500 hours

Consult your authorized dealer for repairs.

29 Check Gas Damper

---as required

CAUTION

Gas dampers are charged with high-pressure nitrogen gas. Inappropriate handling may cause explosion, possibly resulting in serious injury or death.

Gas dampers are used on the skylight of the cab and the engine cover (ZX160-7, 180-7, 300-7 and 330-7 class). Contact your authorized dealer immediately in any of the following situations.

- The cover or window cannot be opened easily.
- It cannot keep itself open.
- Oil or gas leak is found.

30 Check Reed Valve

(Only ZX160-7, 180-7 class)
---every 4500 hours

Consult your authorized dealer for repairs.

31 Tightening and Retightening Torque of Nuts and Bolts

--- every 250 hours (first time only, after 50 hours)

Tighten or retighten nuts and bolts used on this machine in accordance with the torque values shown in the following table. Bolts and nuts should be replaced with those of the same or higher grade.

Check tightness after the first 50 hours, then every 250 hours.

Locations to be retightened other than those in the table should be tightened according to the Tightening Torque Chart (7-189).

ZX120-7 class

No.	Descriptions		Bolt Dia	Quantity	Wrench size	Torque	
						N·m	(kgf·m)
1.	Engine Cushion Rubber Mounting Bolts and Nuts		22	4	32	550	(55)
2.	Engine Bracket Mounting Bolts (Pump side)		12	8	19	110	11
3.	Hydraulic Oil Tank Mounting Bolts		16	4	24	270	(27)
4.	Fuel Tank Mounting Bolts		16	6	24	270	(27)
5.	Radiator Mounting Bolts (Lower side)		12	3	19	90	(9)
6.	Pump Mounting Bolts		12	10	19	110	(11)
7.	Control Valve Mounting Bolts		16	4	24	210	(21)
	Control Valve Bracket Mounting bolts		16	4	24	270	(27)
8.	Swing Device Mounting Bolts		20	10	30	500	(50)
9.	Swing Motor Mounting Bolts (Hexagon wrench)		10	7	8	64	(6.4)
10.	ORS Fitting for Hydraulic Hose and Piping		–	–	17	25	(2.5)
			–	–	19	30	(3)
			–	–	22	40	(4)
			–	–	27	80	(8)
			–	–	27	95	(9.5)
			–	–	32	140	(14)
			–	–	36	180	(18)
			–	–	41	210	(21)
12.	Battery Mounting Nuts		10	4	17	50	(5)
13.	Cab Mounting Nuts		16	4	24	210	(21)
	Cab Mounting Anchor Bolts		22	1	32	550	(55)
	Cab Cushion Rubber Mounting Bolts		14	8	22	180	(18)
14.	Cover Mounting Bolts		6	–	10	10	(1)
			8	–	13	20	(2)
			10	–	17	50	(5)
			12	–	19	90	(9)
15.	Constant Torque Clamp of Low Pressure Piping		–	13	10	14	(1.4)
	Hose KW Clamp of Low Pressure Piping		–	8	7	6	(0.6)
	Jubilee® Clamp of Low Pressure Piping		–	–	8	6	(0.6)
16.	Swing Bearing Mounting Bolts	(Upperstructure)	18	30	27	390	(39)
		(Undercarriage)	16	36	24	265	(26.5)

No.	Descriptions	Bolt Dia	Quantity	Wrench size	Torque	
					N·m	(kgf·m)
17.	Travel Device Mounting Bolts	16	28	24	310	(31)
	Travel Reduction Gear Cover Mounting Bolts	14	8	22	175	(17.5)
	Sprocket Mounting Bolts	16	32	24	270	(27)
18.	Upper Roller Mounting Bolts	12	8	19	110	(11)
19.	Lower Roller Mounting Bolts	16	56	24	310	(31)
20.	Track Shoe Mounting Bolts	16	352	24	410	(41)
21.	Track Guard Mounting Bolts	16	8	24	310	(31)
22.	Platform Handrail Mounting Bolts	12	4	19	130	(13)
25.	Cab Top Handrail Mounting Bolts	10	3	17	50	(5)
26.	Body Top Handrail Mounting Bolts	12	8	19	130	(13)
27.	Front Pin-Retaining Bolts	18	2	27	400	(40)

ZX160-7, 180-7 class

No.	Place to Retighten		Bolt Dia	Qty.	Wrench size	Torque	
						N·m	(kgf·m)
1	Engine Cushion Rubber Mounting Bolts and Nuts		22	4	32	550	(55)
2	Engine Bracket Mounting Bolts (pump side)		16	12	24	270	(27)
	Engine Bracket Mounting Bolts (fan side)		12	8	19	110	(11)
3	Hydraulic Oil Tank Mounting Bolts		16	6	24	270	(27)
4	Fuel Tank Mounting Bolts		16	6	24	270	(27)
5	Radiator Mounting Bolts (left and right)		10	6	17	50	(5)
	Radiator Mounting Bolts (lower side)		16	3	24	270	(27)
6	Pump Mounting Bolts		12	8	19	110	(11)
7	Control Valve Mounting Bolts		16	4	24	210	(21)
	Control Valve Bracket Mounting Bolts		16	4	24	270	(27)
8	Swing Device Mounting Bolts		20	14	30	500	(50)
9	Swing Motor Mounting Bolts (Hexagon wrench)		12	8	10	90	(9)
10	ORS Fittings for Hydraulic Hoses and Piping		-	-	17	25	(2.5)
			-	-	19	30	(3)
			-	-	22	40	(4)
			-	-	27	95	(9.5)
			-	-	32	140	(14)
			-	-	36	180	(18)
			-	-	41	210	(21)
11	Hycolin® Tube Mounting Nuts		-	-	17	35	(3.5)
12	Battery Mounting Nuts		10	4	17	50	(5)
13	Cab Mounting Nuts		16	4	24	210	(21)
	Cab Mounting Anchor Bolts		22	1	32	550	(55)
	Cab Cushion Rubber Mounting Bolts		14	8	22	180	(18)
14	Cover Mounting Bolts		6	-	10	10	(1)
			8	-	13	20	(2)
			10	-	17	50	(5)
			12	-	19	90	(9)
15	Constant Torque Clamp of Low Pressure Piping		-	11	10	14	(1.4)
	Hose KW Clamp of Low Pressure Piping		-	8	7	6	(0.6)
	Jubilee® Clamp of Low Pressure Piping		-	-	7	6	(0.6)
			-	-	8	6	(0.6)
	T-Bolt Clamp of Low Pressure Piping		-	8	11	6	(0.6)
16	Swing Bearing Mounting Bolts	(Upperstructure)	20	37	32	520	(52)
	Swing Bearing Mounting Bolts	(Track)	20	36	32	500	(50)
17	Travel Device Mounting Bolts		20	28	30	630	(63)
	Travel Device Cover Mounting Bolts		14	8	22	180	(18)
	Sprocket Mounting Bolts	ZX160LC-7, 180LCN-7	20	36	30	550	(55)
		ZX180LC-7	20	32	30	550	(55)

No.	Place to Retighten	Bolt Dia	Qty.	Wrench size	Torque	
					N·m	(kgf·m)
18	Upper Roller Mounting Bolts	16	16	24	270	(27)
19	Lower Roller Mounting Bolts	18	56	27	460	(46)
20	Shoe Mounting Bolts (ZX160LC-7)	20	344	27	804	(80.4)
	Shoe Mounting Bolts (ZX180LC-7)	20	368	27	804	(80.4)
21	Track Guard Mounting Bolts	18	8	27	500	(50)
22	Aftertreatment Device Mounting Bolts	12	8	19	90	(9)
23	DEF Tank Bracket Mounting Bolts	10	6	17	50	(5)
24	Platform Handrail Mounting Bolts	12	4	19	130	(13)
25	Cab top handrail mounting bolt	10	3	17	50	(5)
26	Body Top Handrail Mounting Bolts	12	8	19	130	(13)
27	Front Pin-Retaining Bolts	18	2	27	400	(40)

ZX210LC-7

No.	Place to Retighten		Bolt Dia	Qty.	Wrench size	Torque	
						N·m	(kgf·m)
1	Engine Cushion Rubber Mounting Bolts and Nuts		22	4	32	550	(55)
2	Engine Bracket Mounting Bolts (pump side)		16	12	24	270	(27)
	Engine Bracket Mounting Bolts (fan side)		10	8	17	65	(6.5)
3	Hydraulic Oil Tank Mounting Bolts		18	4	27	400	(40)
4	Fuel Tank Mounting Bolts		16	8	24	270	(27)
5	Radiator Mounting Bolts (left and right)		10	6	17	50	(5)
	Radiator Mounting Bolts (lower side)		16	3	24	270	(27)
6	Pump Mounting Bolts		12	8	19	110	(11)
7	Control Valve Mounting Bolts		18	4	27	300	(30)
	Control Valve Bracket Mounting Bolts		16	4	24	270	(27)
8	Swing Device Mounting Bolts		20	14	30	500	(50)
9	Swing Motor Mounting Bolts (Hexagon wrench)		12	8	10	90	(9)
10	ORS Fitting for Hydraulic Hoses and Piping		-	-	17	25	(2.5)
			-	-	19	30	(3)
			-	-	22	40	(4)
			-	-	27	95	(9.5)
			-	-	32	140	(14)
			-	-	36	180	(18)
			-	-	41	210	(21)
			-	-	50	350	(35)
11	Hycolin® Tube Mounting Nuts		-	-	17	35	(3.5)
12	Battery Mounting Nuts		10	4	17	50	(5)
13	Cab Mounting Nuts		16	4	24	210	(21)
	Cab Mounting Anchor Bolts		22	1	32	550	(55)
	Cab Cushion Rubber Mounting Bolts		14	8	22	180	(18)
14	Cover Mounting Bolts		8	-	13	10	(1)
			10	-	17	50	(5)
			12	-	10	90	(9)
15	Constant Torque Clamp of Low Pressure Piping		-	8	10	14	(1.4)
	Flexible Master Coupling of Low Pressure Piping		-	1 pair	17	20.3 to 22.6	(2.03 to 2.26)
	Hose KW Clamp of Low Pressure Piping		-	12	7	6	(0.6)
	Jubilee® Clamp of Low Pressure Piping		-	-	7	6	(0.6)
	T-Bolt Clamp of Low Pressure Piping		-	8	11	6	(0.6)
16	Swing Bearing Mounting Bolts	(Upperstructure)	20	37	30	510	(51)
		(Track)	20	36	30	500	(50)
17	Travel Device Mounting Bolts		20	28	30	630	(63)
	Travel Device Cover Mounting Bolts		14	8	22	180	(18)
	Sprocket Mounting Bolts		20	36	30	550	(55)
18	Upper Roller Mounting Bolts		16	16	24	270	(27)

No.	Place to Retighten	Bolt Dia	Qty.	Wrench size	Torque	
					N·m	(kgf·m)
19	Lower Roller Mounting Bolts	18	64	27	460	(46)
20	Track Shoe Mounting Bolts	20	392	27	804	(80)
21	Track Guard Mounting Bolts	18	16	27	500	(50)
22	Aftertreatment Device Mounting Bolts	12	8	19	90	(9)
23	DEF Tank Bracket Mounting Bolts	10	6	17	50	(5)
24	Platform Handrail Mounting Bolts	12	4	19	110	(11)
26	Body Top Handrail Mounting Bolts	12	12	19	110	(11)
27	Front Pin-Retaining Bolts	18	2	27	400	(40)

ZX210LCN-7, 240N-7

No.	Place to Retighten		Bolt Dia	Qty.	Wrench size	Torque	
						N·m	(kgf·m)
1	Engine Cushion Rubber Mounting Bolts and Nuts		22	4	32	550	(55)
2	Engine Bracket Mounting Bolts (pump side)		16	12	24	270	(27)
	Engine Bracket Mounting Bolts (fan side)		10	8	17	65	(6.5)
3	Hydraulic Oil Tank Mounting Bolts	Front	16	3	24	270	(27)
		Rear	18	2	27	400	(40)
4	Fuel Tank Mounting Bolts		16	6	24	270	(27)
5	Radiator Mounting Bolts (left and right)		10	6	17	50	(5)
	Radiator Mounting Bolts (lower side)		16	3	24	270	(27)
6	Pump Mounting Bolts		12	8	19	110	(11)
7	Control Valve Mounting Bolts		18	4	27	300	(30)
	Control Valve Bracket Mounting Bolts		16	4	24	270	(27)
8	Swing Device Mounting Bolts		20	14	30	500	(50)
9	Swing Motor Mounting Bolts (Hexagon wrench)		12	8	10	90	(9)
10	ORS Fittings for Hydraulic Hoses and Piping		-	-	17	25	(2.5)
			-	-	19	30	(3)
			-	-	22	40	(4)
			-	-	27	95	(9.5)
			-	-	32	140	(14)
			-	-	36	180	(18)
			-	-	41	210	(21)
			-	-	50	350	(35)
11	Hycolin® Tube Mounting Nuts		-	-	17	35	(3.5)
12	Battery Mounting Nuts		10	4	17	50	(5)
13	Cab Mounting Nuts		16	4	24	210	(21)
	Cab Mounting Anchor Bolts		22	1	32	550	(55)
	Cab Cushion Rubber Mounting Bolts		14	8	22	180	(18)
14	Cover Mounting Bolts		8	-	13	10	(1)
			10	-	17	50	(5)
			12	-	10	90	(9)
15	Constant Torque Clamp of Low Pressure Piping		-	8	10	14	(1.4)
	Flexible Master Coupling of Low Pressure Piping		-	1 pair	17	20.3 to 22.6	(2.03 to 2.26)
	Hose KW Clamp of Low Pressure Piping		-	12	7	6	(0.6)
	Jubilee® Clamp of Low Pressure Piping		-	-	7	6	(0.6)
	T-bolt Clamp of Low Pressure Piping		-	8	11	6	(0.6)
16	Swing Bearing Mounting Bolts	(Upperstructure)	20	40	30	510	(51)
		(Undercarriage)	20	36	30	500	(50)
17	Travel Device Mounting Bolts		20	28	30	630	(63)
	Travel Device Cover Mounting Bolts		14	8	22	180	(18)
	Sprocket Mounting Bolts		20	36	30	550	(55)

No.	Place to Retighten	Bolt Dia	Qty.	Wrench size	Torque	
					N·m	(kgf·m)
18	Upper Roller Mounting Bolts	16	16	24	270	(27)
19	Lower Roller Mounting Bolts	18	64	27	460	(46)
20	Track Shoe Mounting Bolts	20	392	27	804	(80)
21	Track Guard Mounting Bolts	18	16	27	500	(50)
22	Aftertreatment Device Mounting Bolts	12	8	19	90	(9)
23	DEF Tank Bracket Mounting Bolts	10	6	17	50	(5)
24	Platform Handrail Mounting Bolts	12	4	19	110	(11)
26	Body Top Handrail Mounting Bolts	12	12	19	110	(11)
27	Front Pin-Retaining Bolts	18	2	27	400	(40)

ZX240-7 class

No.	Place to Retighten		Bolt Dia	Qty.	Wrench size	Torque	
						N·m	(kgf·m)
1.	Engine Cushion Rubber Mounting Bolts and Nuts		22	4	32	550	(55)
2.	Engine Bracket Mounting Bolts (pump side)		16	12	24	270	(27)
	Engine Bracket Mounting Bolts (fan side)		10	8	17	65	(6.5)
3.	Hydraulic Oil Tank Mounting Bolts		18	4	27	400	(40)
4.	Fuel Tank Mounting Bolts		16	8	24	270	(27)
5.	Radiator Mounting Bolts (left and right)		10	6	17	50	(5)
	Radiator Mounting Bolts (lower side)		16	3	24	270	(27)
6.	Pump Mounting Bolts		12	8	19	110	(11)
7.	Control Valve Mounting Bolts		18	4	27	300	(30)
	Control Valve Bracket Mounting Bolts		16	4	24	270	(27)
8.	Swing Device Mounting Bolts		22	14	32	650	(65)
9.	Swing Motor Mounting Bolts (Hexagon wrench)		12	8	10	90	(9)
10.	ORS Fittings for Hydraulic Hoses and Piping		–	–	17	25	(2.5)
			–	–	19	30	(3)
			–	–	22	40	(4)
			–	–	27	95	(9.5)
			–	–	32	140	(14)
			–	–	36	180	(18)
			–	–	41	210	(21)
			–	–	50	350	(35)
11.	Hycolin® Tube Mounting Nuts		–	–	17	35	(3.5)
12.	Battery Mounting Nuts		10	4	17	50	(5)
13.	Cab Mounting Nuts		16	4	24	210	(21)
	Cab Mounting Anchor Bolts		22	2	32	550	(55)
	Cab Cushion Rubber Mounting Bolts		14	8	22	180	(18)
14.	Cover Mounting Bolts		8	–	13	10	(1)
			10	–	17	50	(5)
			12	–	19	90	(9)
15.	Constant Torque Clamp of Low Pressure Piping		–	8	10	14	(1.4)
	Flexible Master coupling of Low Pressure Piping		–	1 pair	17	20.3 to 22.6	(2.03 to 2.26)
	Hose KW Clamp of Low Pressure Piping		—	12	7	6	(0.6)
	Jubilee® Clamp of Low Pressure Piping		–	–	7	6	(0.6)
	T-Bolt Clamp of Low Pressure Piping		–	8	11	6	(0.6)
16.	Swing Bearing Mounting Bolts	(Upperstructure)	22	36	32	640	(64)
		(Undercarriage)	22	36	32	715	(71.5)
17.	Travel Device Mounting Bolts		20	32	30	630	(63)
	Travel Device Cover Mounting Bolts		14	8	22	180	(18)
	Sprocket Mounting Bolts		20	40	30	550	(55)
18.	Upper Roller Mounting Bolts		16	16	24	270	(27)

No.	Place to Retighten	Bolt Dia	Qty.	Wrench size	Torque	
					N·m	(kgf·m)
19.	Lower Roller Mounting Bolts	18	72	27	460	(46)
20.	Track Shoe Mounting Bolts	20	408	27	804	(80.4)
21.	Track Guard Mounting Bolts	18	24	27	500	(50)
22.	Aftertreatment Device Mounting Bolts	12	8	19	90	(9)
23.	DEF Tank Bracket Mounting Bolts	10	6	17	50	(5)
24.	Platform Handrail Mounting Bolts	12	4	19	110	(11)
26.	Body Top Handrail Mounting Bolts	12	12	19	110	(11)
27.	Front Pin-Retaining Bolts	22	2	32	750	(75)
	Arm Cylinder Bottom and Rod Pin-Retaining Bolts	18	2	27	400	(40)

ZX300-7 class

No.	Place to Retighten	Bolt Dia	Qty.	Wrench size	Torque	
					N·m	(kgf·m)
1.	Engine Cushion Rubber Mounting Bolts and Nuts	20	4	30	550	(55)
2.	Engine Bracket Mounting Bolts (pump side)	12	12	19	110	(11)
	Engine Bracket Mounting Bolts (fan side)	10	10	17	65	(6.5)
3.	Hydraulic Oil Tank Mounting Bolts	18	4	27	400	(40)
4.	Fuel Tank Mounting Bolts	16	8	24	270	(27)
5.	Radiator Mounting Bolts (left and right)	10	6	17	50	(5)
	Radiator Mounting Bolts (lower side)	16	5	24	270	(27)
6.	Pump Mounting Bolts	12	13	19	110	(11)
7.	Control Valve Mounting Bolts	18	4	27	300	(30)
	Control Valve Bracket Mounting Bolts	16	4	24	270	(27)
8.	Swing Device Mounting Bolts	22	14	32	650	(65)
9.	Swing Motor Mounting Bolts (Hexagon wrench)	12	12	10	90	(9)
10.	ORS Fittings for Hydraulic Hoses and Piping	–	–	17	25	(2.5)
		–	–	19	30	(3)
		–	–	22	40	(4)
		–	–	27	95	(9.5)
		–	–	32	140	(14)
		–	–	36	180	(18)
		–	–	41	210	(21)
		–	–	50	350	(35)
11.	Hycolin® Tube Mounting Nuts	–	–	17	35	(3.5)
12.	Battery Mounting Nuts	10	8	17	25	(2.5)
13.	Cab Mounting Nuts	16	4	24	210	(21)
	Cab Mounting Anchor Bolts	22	2	32	550	(55)
	Cab Cushion Rubber Mounting Bolts	14	8	22	180	(18)
14.	Cover Mounting Bolts	8	–	13	10	(1)
		10	–	17	50	(5)
		12	–	19	90	(9)
15.	Constant Torque Clamp of Low Pressure Piping	–	8	8	14	(1.4)
	Flexible Master Coupling of Low Pressure Piping	–	1 pair	17	20.5 to 22.6	(2.05 to 2.26)
	Hose KW Clamp of Low Pressure Piping	—	12	7	6	(0.6)
	Jubilee® Clamp of Low Pressure Piping	–	–	7	6	(0.6)
	T-Bolt Clamp of Low Pressure Piping	–	8	11	6	(0.6)
16.	Swing Bearing Mounting Bolts (Upperstructure)	22	36	32	640	(64)
	Swing Bearing Mounting Bolts (Undercarriage)	22	36	32	715	(71.5)
17.	Travel Device Mounting Bolts	20	40	30	630	(63)
	Travel Device Cover Mounting Bolts	14	8	22	180	(18)
	Sprocket Mounting Bolts	20	48	30	550	(55)
18.	Upper Roller Mounting Bolts	18	16	27	460	(46)

No.	Place to Retighten	Bolt Dia	Qty.	Wrench size	Torque	
					N·m	(kgf·m)
19.	Lower Roller Mounting Bolts	22	64	32	840	(84)
20.	Track Shoe Mounting Bolts	22	384	32	1128	(112.8)
21.	Track Guard Mounting Bolts	22	24	32	750	(75)
22.	Aftertreatment Device Mounting Bolts	12	18	19	90	(9)
23.	DEF Tank Bracket Mounting Bolts	10	6	17	50	(5)
24.	Platform Handrail Mounting Bolts	12	4	19	110	(11)
26.	Body Top Handrail Mounting Bolts	12	12	19	110	(11)
27.	Front Pin-Retaining Bolts	22	2	32	750	(75)
	Boom Top, Arm Cylinder Bottom and Rod Pin-Retaining Bolts	18	5	27	400	(40)

ZX330-7 class

No.	Place to Retighten		Bolt Dia	Qty.	Wrench size	Torque	
						N·m	(kgf·m)
1.	Engine Cushion Rubber Mounting Bolts and Nuts		20	4	30	550	(55)
2.	Engine Bracket Mounting Bolts (Pump Side)		12	12	19	110	(11)
	Engine Bracket Mounting Bolts (Fan Side)		10	10	17	65	(6.5)
3.	Hydraulic Oil Tank Mounting Bolts		18	4	27	400	(40)
4.	Fuel Tank Mounting Bolts		16	8	24	270	(27)
5.	Radiator Mounting Bolts (Left and Right)		10	6	17	50	(5)
	Radiator Mounting Bolts (Lower Side)		16	5	24	270	(27)
6.	Pump Mounting Bolts		12	13	19	110	(11)
7.	Control Valve Mounting Bolts		18	4	27	300	(30)
	Control Valve Bracket Mounting Bolts		16	4	24	270	(27)
8.	Swing Device Mounting Bolts		22	14	32	650	(65)
9.	Swing Motor Mounting Bolts (Hexagon Wrench)		12	12	10	90	(9)
10.	ORS fittings for hydraulic hoses and piping		–	–	17	25	(2.5)
			–	–	19	30	(3)
			–	–	22	40	(4)
			–	–	27	95	(9.5)
			–	–	32	140	(14)
			–	–	36	180	(18)
			–	–	41	210	(21)
			–	–	50	350	(35)
11.	Hycolin® tube mounting nuts		–	–	17	35	(3.5)
12.	Battery mounting nuts		10	8	17	25	(2.5)
13.	Cab mounting nuts		16	4	24	210	(21)
	Cab Mounting Anchor Bolts		22	2	32	550	(55)
	Cab Cushion Rubber Mounting Bolts		14	8	22	180	(18)
14.	Cover Mounting Bolts		8	–	13	10	(1)
			10	–	17	50	(5)
			12	–	19	90	(9)
15.	Constant Torque Clamp of Low Pressure Piping		–	8	8	14	(1.4)
	Flexible Master Coupling of Low Pressure Piping		–	1 pair	17	20.5 to 22.6	(2.05 to 2.26)
	Hose KW clamp of low pressure piping		—	12	7	6	(0.6)
	Jubilee® clamp of low pressure piping		–	–	7	6	(0.6)
	T-Bolt Clamp of Low Pressure Piping		–	8	11	6	(0.6)
16.	Swing Bearing Mounting Bolts	(Upperstructure)	27	36	41	1230	(123)
		(Undercarriage)	27	36	41	1230	(123)
17.	Travel Device Mounting Bolts		20	48	30	630	(63)
	Travel Device Cover Mounting Bolts		14	8	22	180	(18)
	Sprocket Mounting Bolts		22	44	32	680	(68)
18.	Upper Roller Mounting Bolts		18	16	27	460	(46)

No.	Place to Retighten	Bolt Dia	Qty.	Wrench size	Torque	
					N·m	(kgf·m)
19.	Lower Roller Mounting Bolts	22	64	32	840	(84)
20.	Track Shoe Mounting Bolts	22	384	32	1128	(112.8)
21.	Track Guard Mounting Bolts	22	24	32	750	(75)
22.	Aftertreatment Device Mounting Bolts	12	18	19	90	(9)
23.	DEF Tank Bracket Mounting Bolts	10	6	17	50	(5.0)
24.	Platform Handrail Mounting Bolts	12	4	19	110	(11)
26.	Body Top Handrail Mounting Bolts	12	12	19	110	(11)
27.	Front Pin-Retaining Bolts	22	2	32	750	(75)
	Boom Cylinder Bottom, Boom Top, Arm Cylinder Bottom and Rod Pin-Retaining Bolts	18	7	27	400	(40)

Tightening Torque Chart

Bolt Dia. mm	Hexagon Wrench							Socket Bolt		
	10.9 Ⓣ T		8.8 Ⓗ H		7 M		Wrench size mm	Socket Bolt		Wrench size mm
	N·m(kgf·m)		N·m(kgf·m)		N·m(kgf·m)			N·m	(kgf·m)	
6					3.3 to 4.2 (0.3 to 0.4)		10			5
8	30	(3.0)	20	(2.0)	10	(1.0)	13	20	(2.0)	6
10	65	(6.5)	50	(5.0)	20	(2.0)	17	50	(5.0)	8
12	110	(11)	90	(9)	35	(3.5)	19	90	(9)	10
14	180	(18)	140	(14)	55	(5.5)	22	140	(14)	12
16	270	(27)	210	(21)	80	(8.0)	24	210	(21)	14
18	400	(40)	300	(30)	120	(12)	27	300	(30)	14
20	550	(55)	400	(40)	170	(17)	30	400	(40)	17
22	750	(75)	550	(55)	220	(22)	32			
24	950	(95)	700	(70)	280	(28)	36			
27	1400	(140)	1050	(105)	400	(40)	41			
30	1950	(195)	1450	(145)	550	(55)	46			
33	2600	(260)	1950	(195)	750	(75)	50			
36	3200	(320)	2450	(245)	950	(95)	55			

CAUTION

If mounting bolts for counterweights are loose, consult your authorized dealer.

IMPORTANT

- **Apply lubricant (e.g. white zinc B dissolved into spindle oil) to new bolts and nuts before tightening them.**
- **Remove soil, dust, and/or dirt from the nut and bolt thread surfaces before tightening.**
- **Tighten nuts and bolts to specifications. If tightened with excessively low or high torque, missing or breakage of nuts and/or bolts may result.**

1. Engine Cushion Rubber Mounting Bolts and Nuts

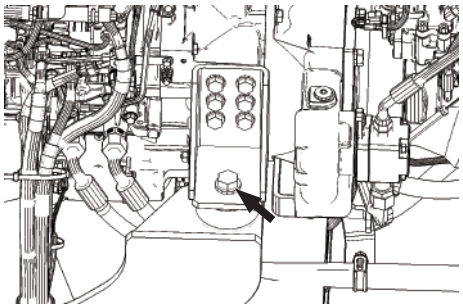

Pump Side

MDFY-07-019-1 ja

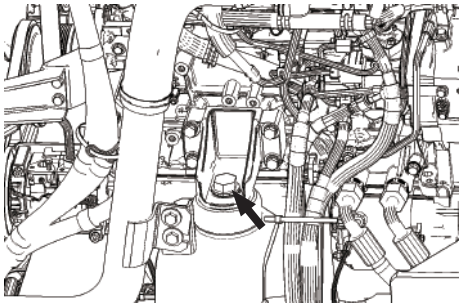

Fan Side

MDFY-07-020-1 ja

2. Engine Bracket Mounting Bolts

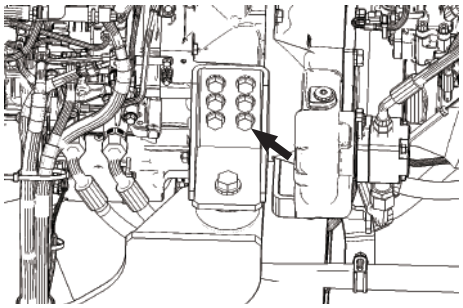

Pump Side

MDFY-07-019-2 ja

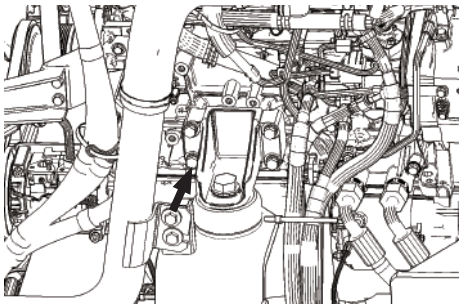

Fan Side

MDFY-07-020-2 ja

3. Hydraulic Oil Tank Mounting Bolts

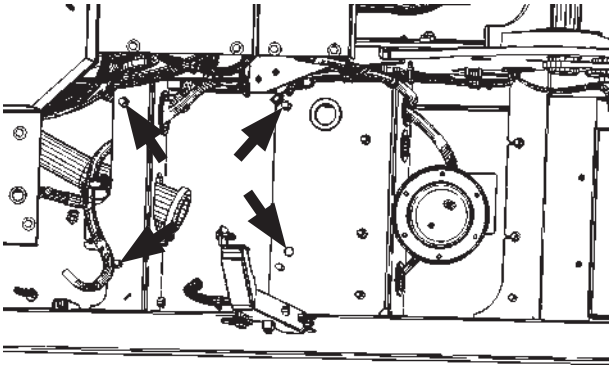

ZX120-7 class

MDFY-07-133-1 ja

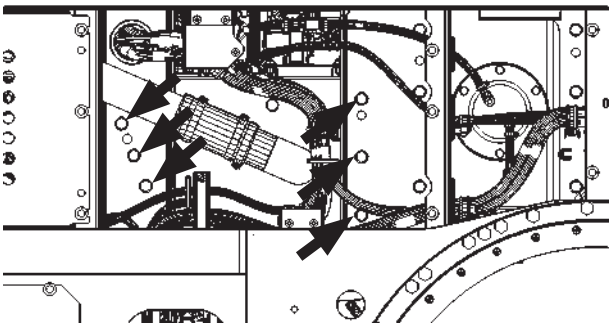

ZX160-7, 180-7 class

MDFY-01-155-1 ja

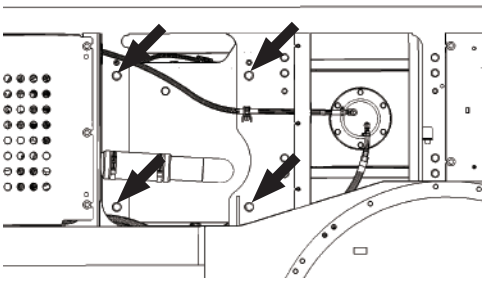

ZX210LC-7, 240-7, 300-7, 330-7 class

MDFY-07-021-1 ja

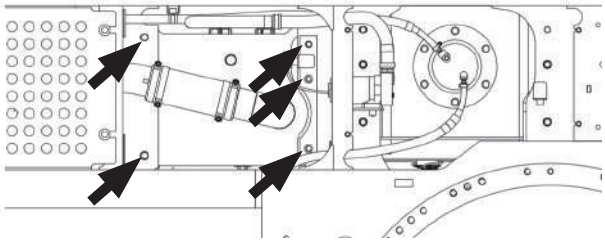

ZX210LCN-7, 240N-7

MDFY-07-151-1 ja

4. Fuel Tank Mounting Bolts

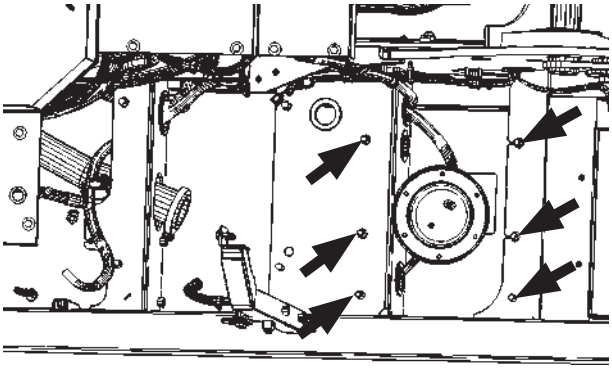

ZX120-7 class

MDFY-07-133-2 ja

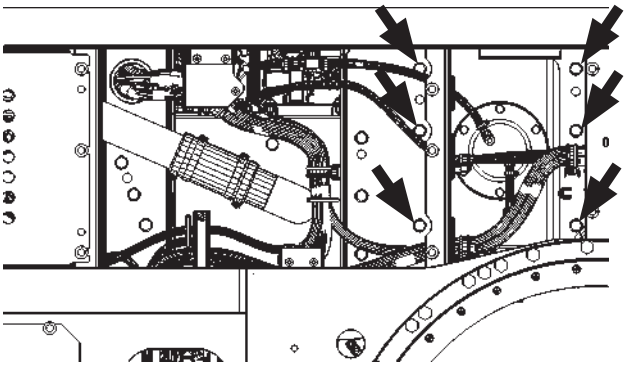

ZX160-7, 180-7 class

MDFY-01-155-2 ja

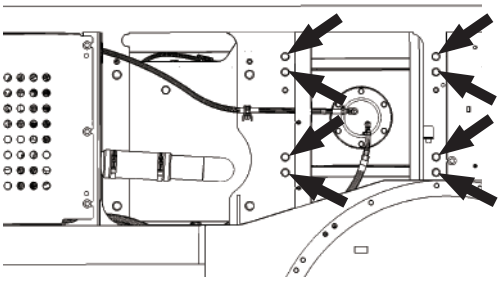

ZX210LC-7, 240-7, 300-7, 330-7 class

MDFY-07-021-2 ja

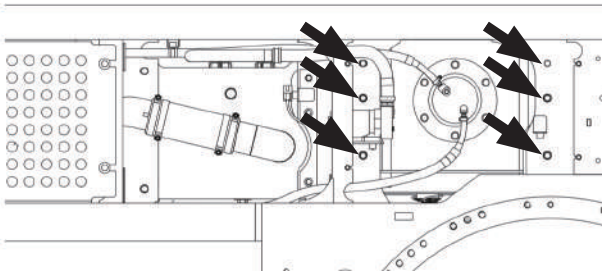

ZX210LCN-7, 240N-7

MDFY-07-151-2 ja

5. Radiator Mounting Bolts

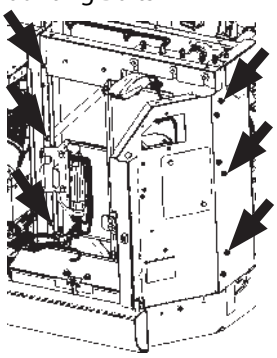

ZX120-7 class (left and right sides)

MDFY-07-134-1 ja

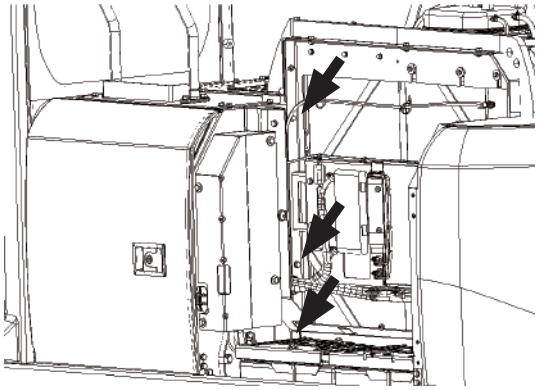

ZX200-7, 240-7 class (left and right sides)

MDFY-07-153-1 ja

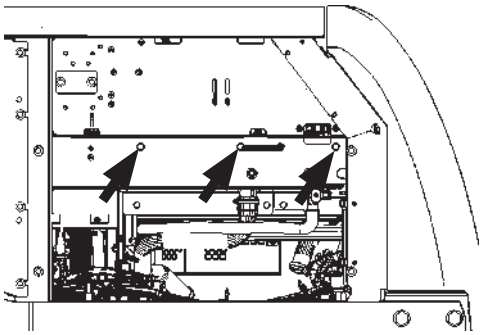

ZX120-7 class (bottom)

MDFY-07-135-1 ja

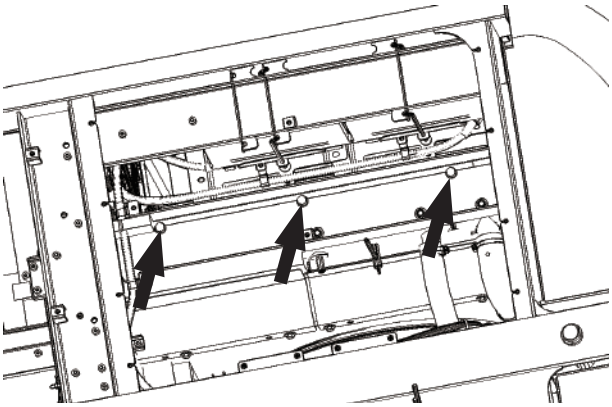

ZX200-7, 240-7 class (bottom)

MDFY-07-022-1 ja

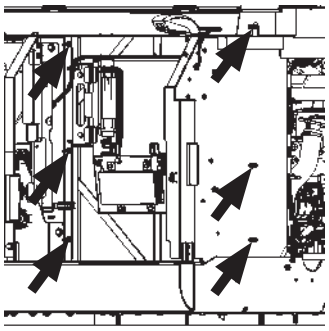

ZX160-7, 180-7 class (left and right sides)

MDFY-01-156-1 ja

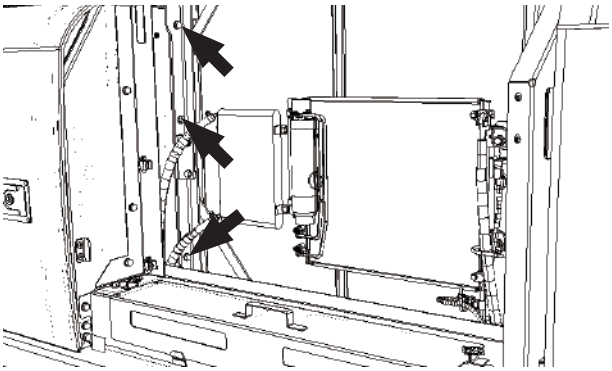

ZX300-7, 330-7 class (left and right sides)

MDFY-07-053-1 ja

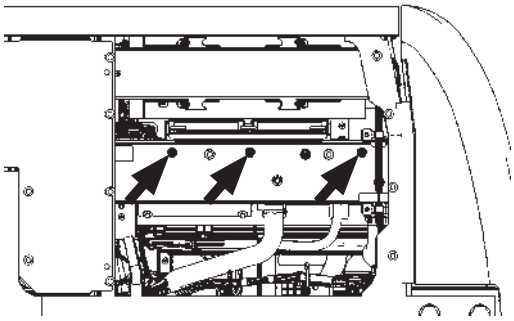

ZX160-, 180-7 class (bottom)

MDFY-01-157-1 ja

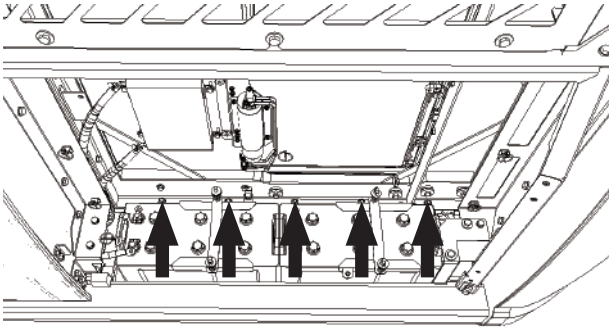

ZX300-7, 330-7 class (bottom)

MDFY-07-052-1 ja

6. Pump Mounting Bolts

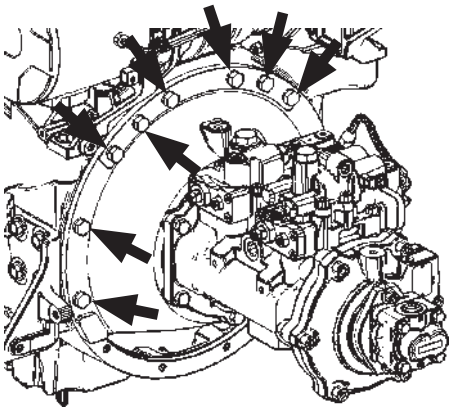

ZX120-7 class

MDFY-07-136-1 ja

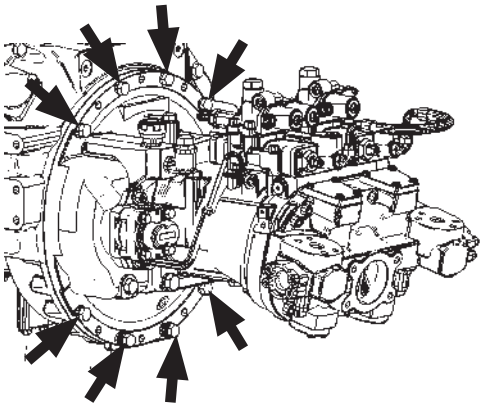

ZX160-7, 180-7 class

MDFY-01-158-2 ja

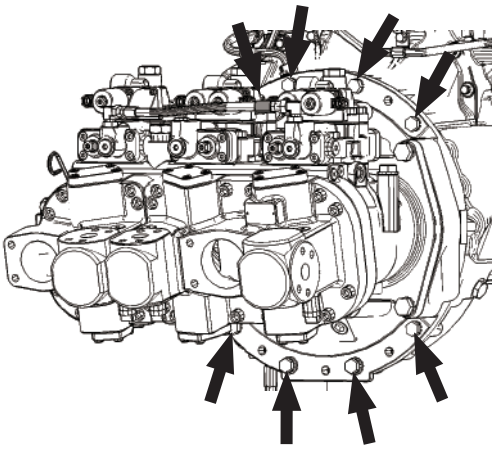

ZX200-7, 240-7, 300-7, 330-7 class

MDFY-07-023-1 ja

7. Control Valve Mounting Bolts

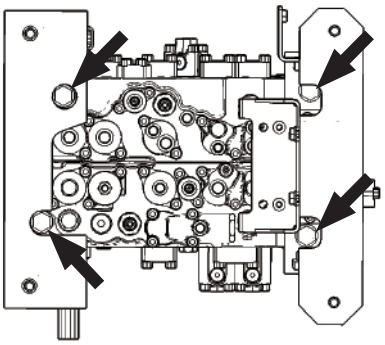

MDFY-07-024-1 ja

Control Valve Bracket Mounting Bolts

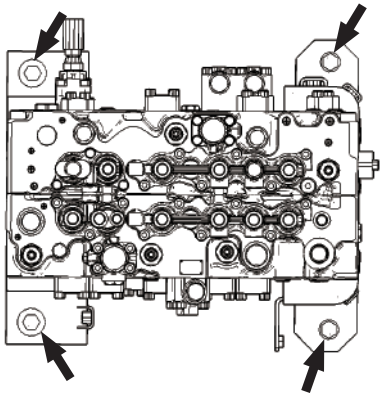

MDFY-07-025-1 ja

8. Swing Device Mounting Bolts

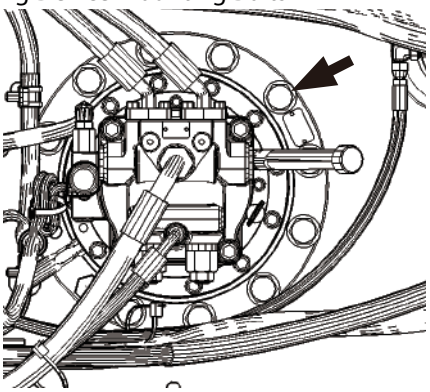

ZX120-7 class

MDFY-07-143-1 ja

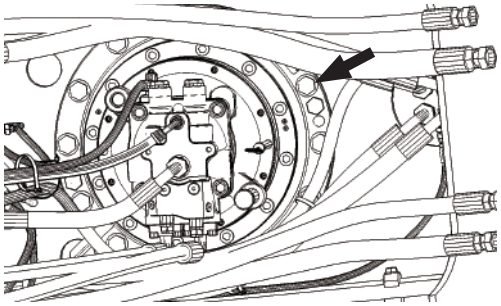

ZX160-7, 180-7, 200-7, 240-7, 300-7, 330-7 class

MDFY-07-026-1 ja

9. Swing Motor Mounting Bolts

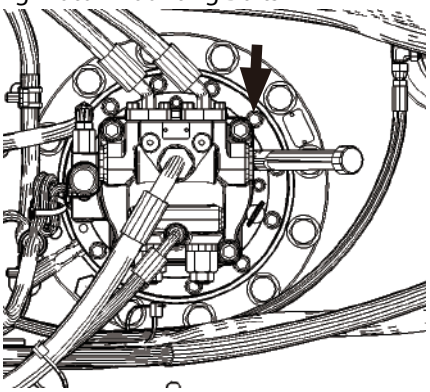

ZX120-7 class

MDFY-07-143-2 ja

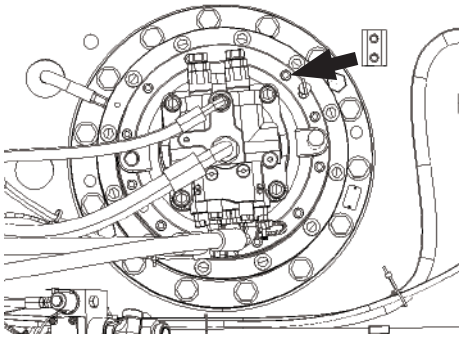

ZX160-7, 180-7, 200-7, 240-7, 300-7, 330-7 class

MDFY-07-095-1 ja

10. ORS Fittings for Hydraulic Hoses and Piping

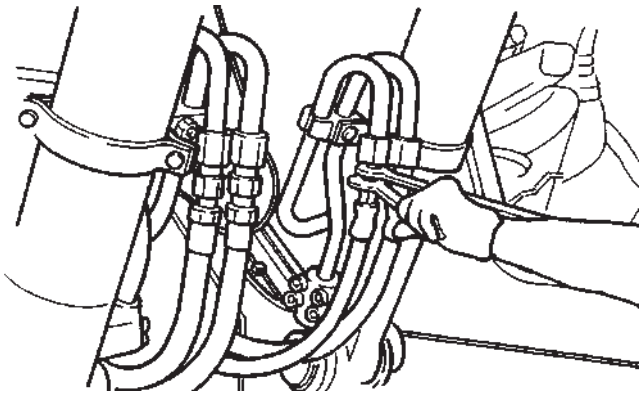

M104-07-079 ja

11. Hycolin® Tube Mounting Nuts

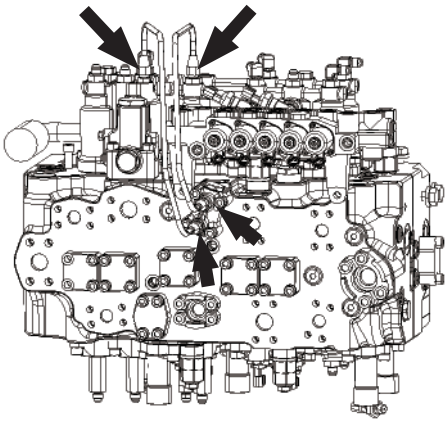

MDFY-07-027-1 ja

12. Battery Mounting Nuts

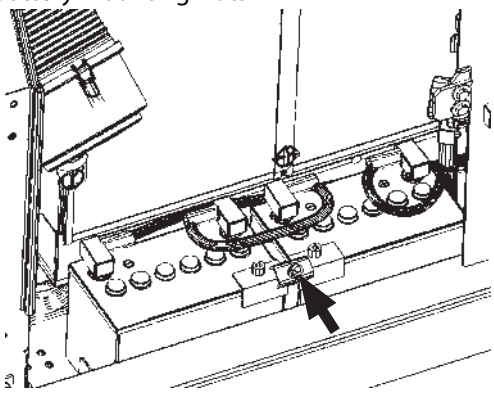

ZX120-7 class

MDFY-07-137-1 ja

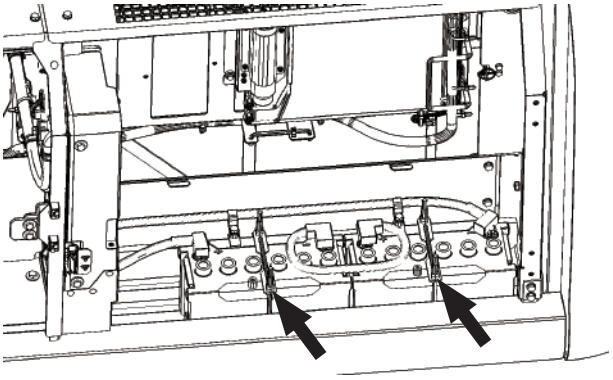

ZX160-7, 180-7, 200-7, 240-7, 300-7, 330-7 class

MDFY-07-028-1 ja

13. Cab Mounting Nuts

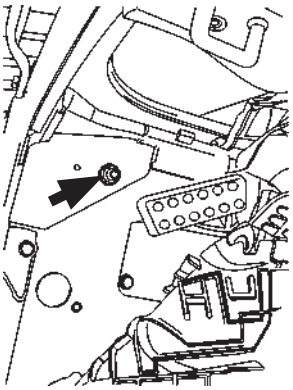

M1U1-07-026-1 ja

Cab Mounting Anchor Bolts

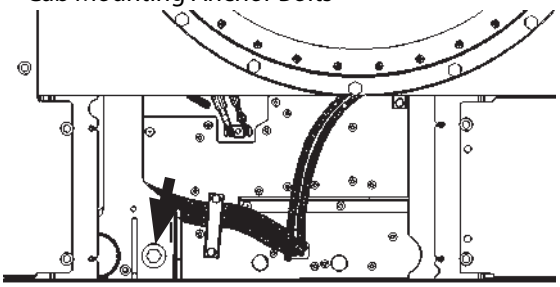

ZX120-7, 160-7, 180-7, 200-7 class

MDFY-01-161-1 ja

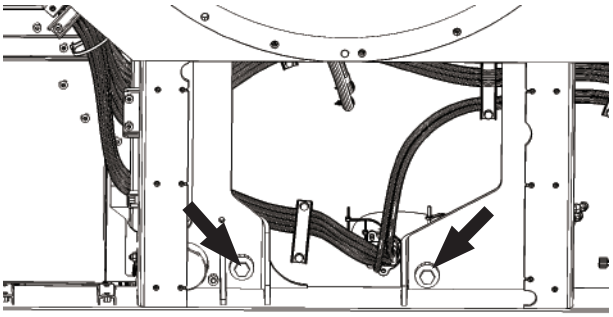

ZX240-7, 300-7, 330-7 class

MDFY-07-029-1 ja

Cab Cushion Rubber Mounting Bolts

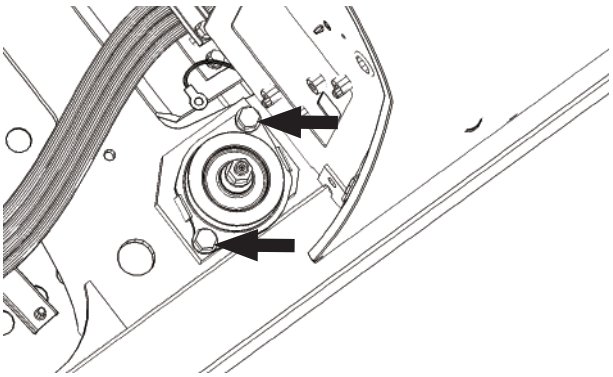

MDFY-07-030-1 ja

14. Cover Mounting Bolts

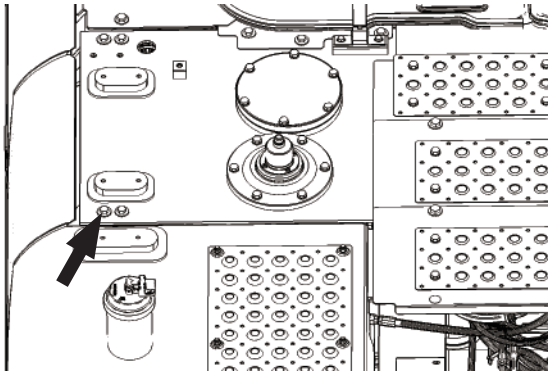

MDFY-07-031-1 ja

15. Constant Torque Clamp of Low Pressure Piping

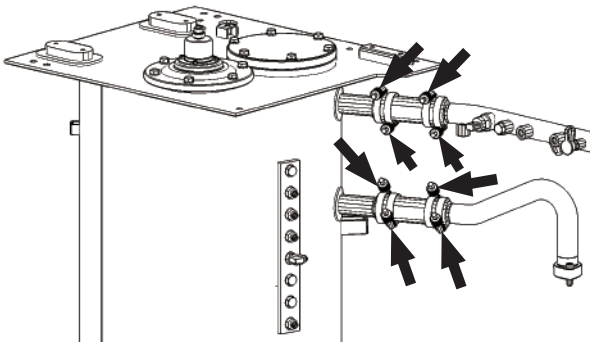

MDFY-07-032-1 ja

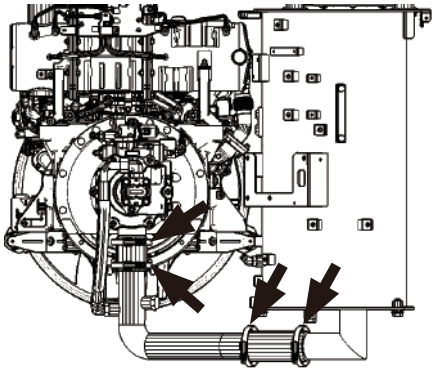

ZX120-7 class

MDFY-07-146-1 ja

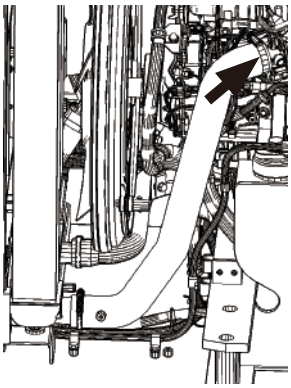

ZX120-7 class

MDFY-07-145-2 ja

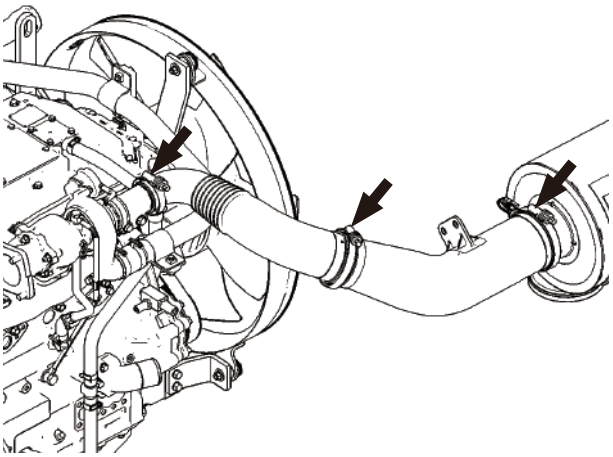

ZX160-7, 180-7 class

MDFY-07-160-1 ja

Flexible Master Coupling of Low Pressure Piping

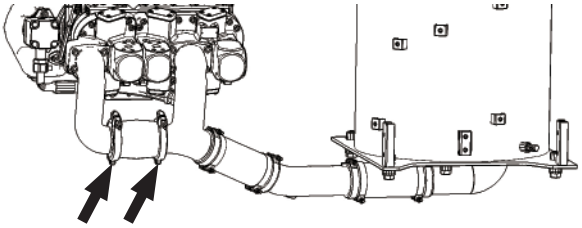

ZX200-7,240-7, 300-7, 330-7 class

MDFY-07-033-1 ja

T-Bolt Clamp of Low-Pressure Piping

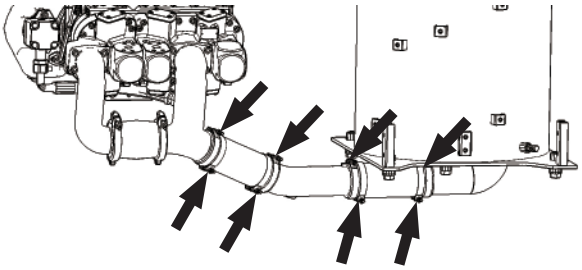

ZX160-7, 180-7, 200-7, 240-7, 300-7, 330-7 class

MDFY-07-033-2 ja

Hose KW Clamp of Low Pressure piping

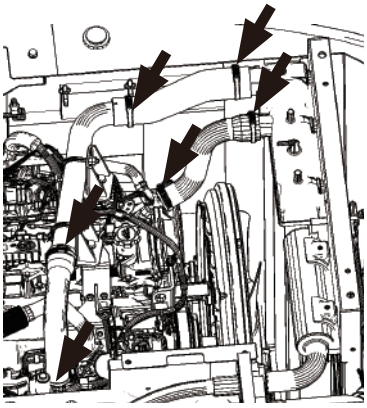

ZX120-7 class

MDFY-07-144-1 ja

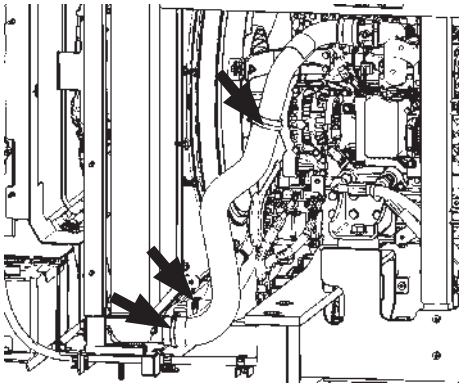

ZX160-7, 180-7 class

MDFY-01-162-2 ja

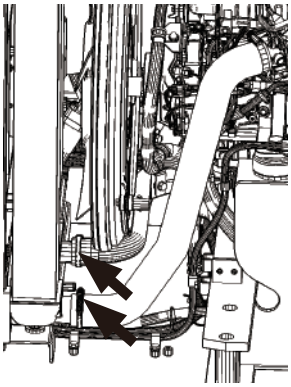

ZX120-7 class

MDFY-07-145-3 ja

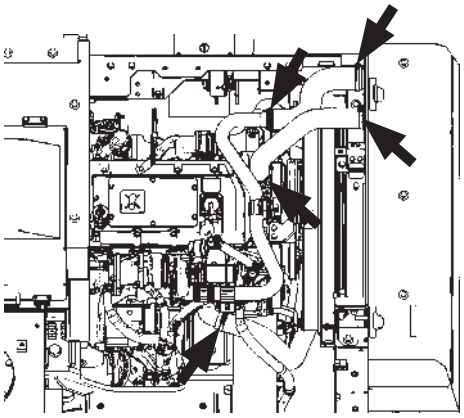

ZX160-7, 180-7 class

MDFY-01-163-1 ja

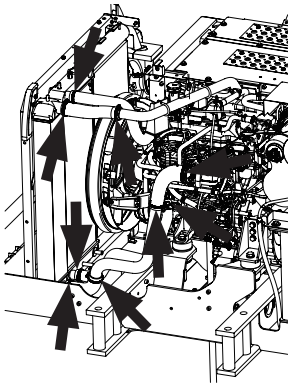

ZX200-7, 240-7, 300-7, 330-7 class

MDFY-07-157-1 ja

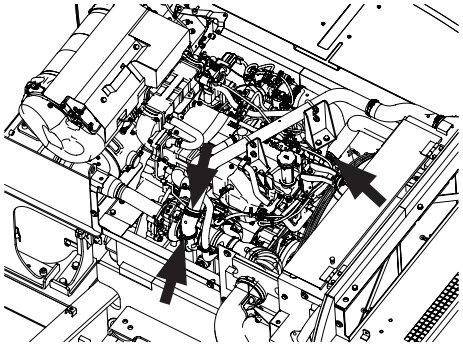

ZX200-7, 240-7, 300-7, 330-7 class

MDFY-07-158-1 ja

16. Swing Bearing Mounting Bolts

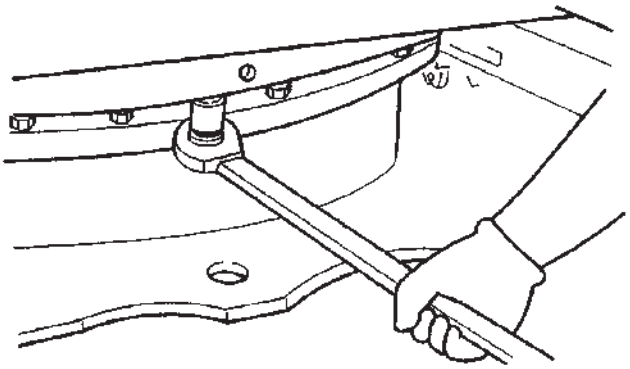

Upperstructure Side

M107-07-088 ja

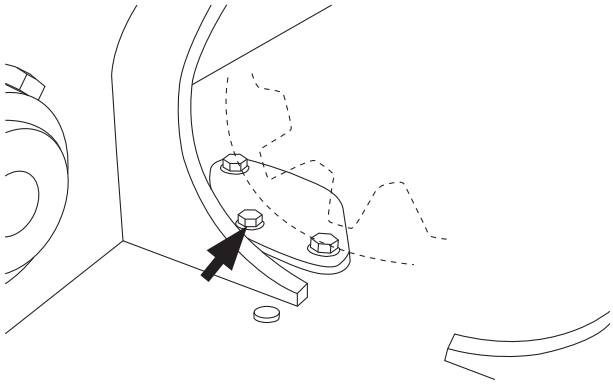

Undercarriage Side
ZX120-7 class

M1U1-07-113-1 ja

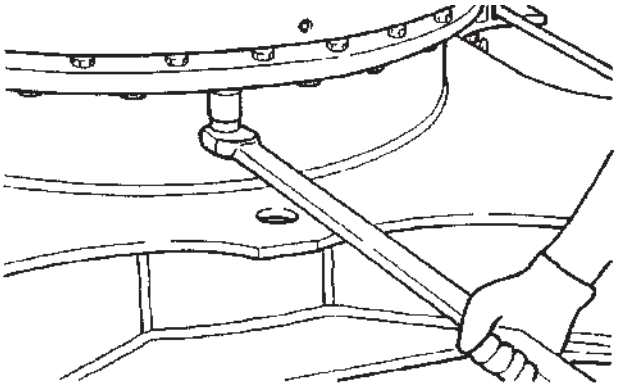

Undercarriage Side
ZX160-7, 180-7, 200-7, 240-7, 300-7, 330-7 class

M107-07-089 ja

17. Travel Device Mounting Bolts

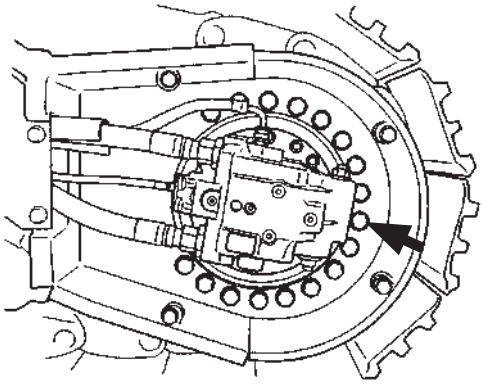

M164-07-005-1 ja

Travel Reduction Drive Cover Mounting Bolts

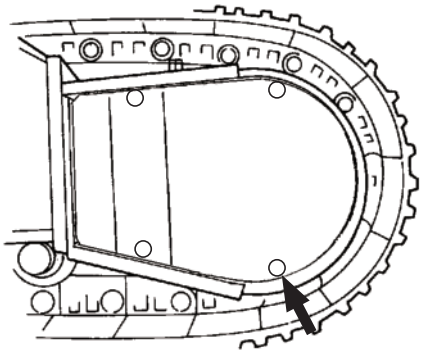

MDFY-07-035-1 ja

Sprocket Mounting Bolts

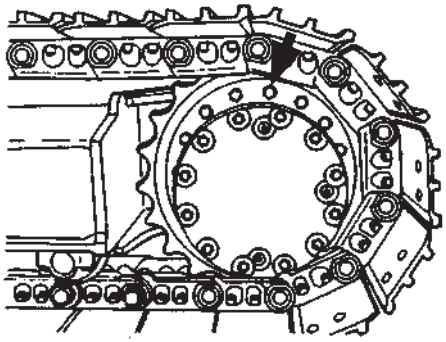

M154-07-050-1 ja

18. Upper Roller Mounting Bolts

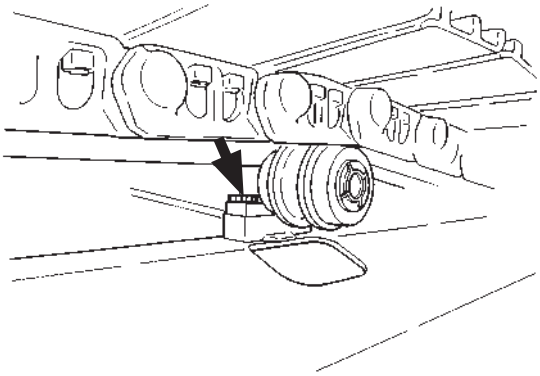

M157-07-224-1 ja

19. Lower Roller Mounting Bolts

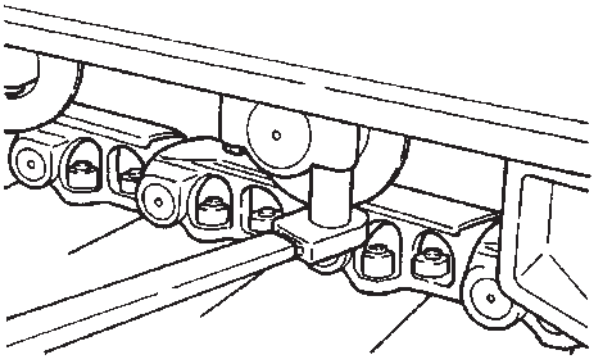

M107-07-092 ja

20. Track Shoe Mounting Bolts

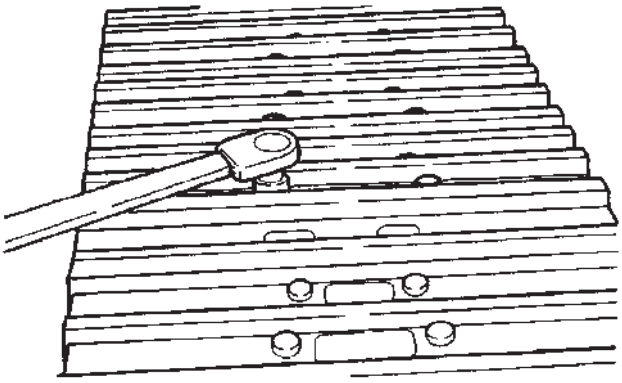

M107-07-093 ja

21. Track Guard Mounting Bolts

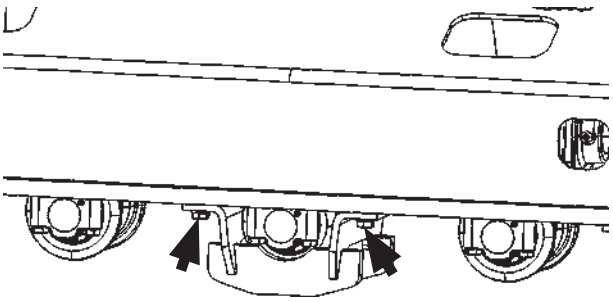

MDAA-07-058-1 ja

22. Aftertreatment Device Mounting Bolts

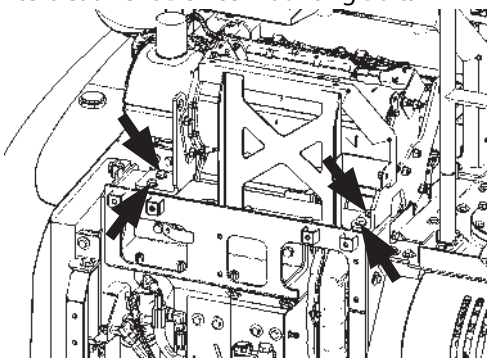

ZX160-7, 180-7 class

MDFY-01-165-1 ja

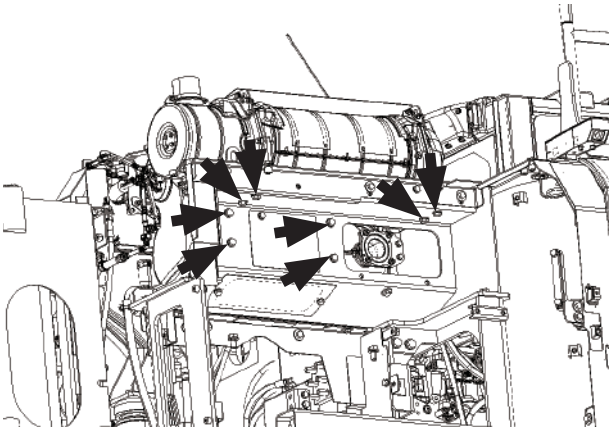

ZX200-7, 240-7 class

MDFY-07-036-1 ja

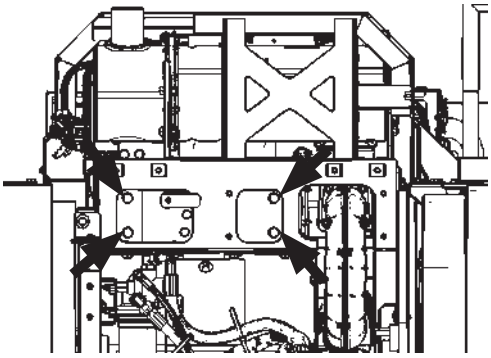

ZX160-7, 180-7 class

MDFY-01-164-1 ja

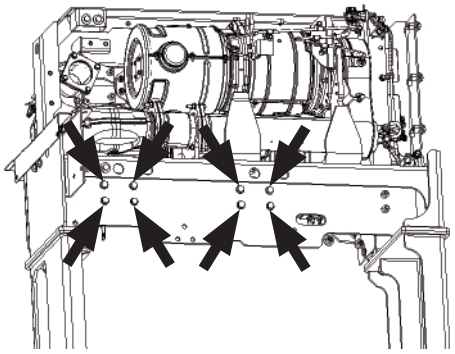

ZX300-7, 330-7 class (rear)

MDFY-07-109-1 ja

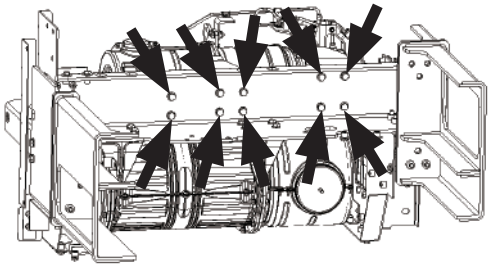

ZX300-7, 330-7 class (bottom)

MDFY-07-108-1 ja

23. DEF Tank Bracket Mounting Bolts

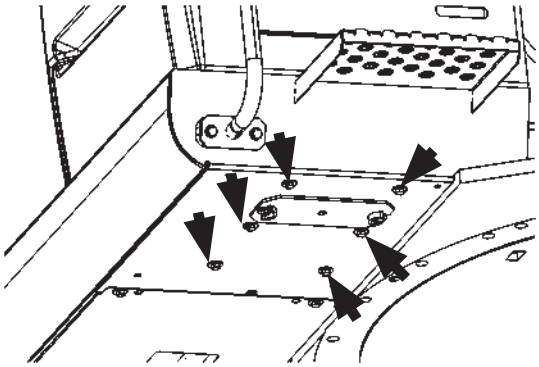

MDC1-07-042-1 ja

24. Platform Handrail Mounting Bolts

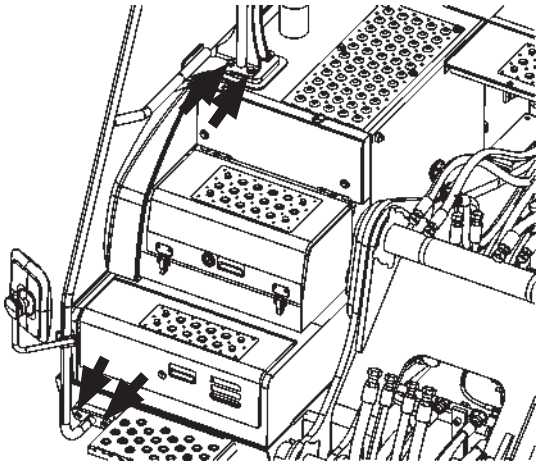

MDC1-07-058-1 ja

25. Cab Top Handrail Mounting Bolt

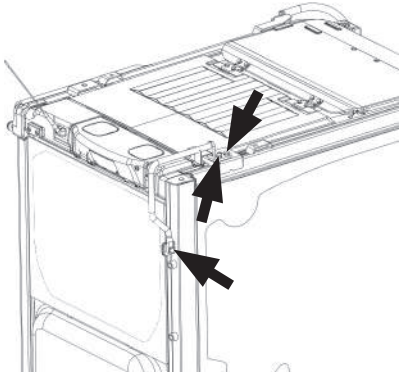

MDFY-07-147-1 ja

26. Body Top Handrail Mounting Bolts

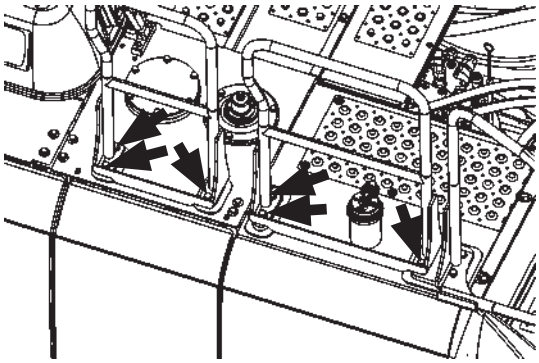

MDC1-07-059-1 ja

27. Front Pin-Retaining Bolts

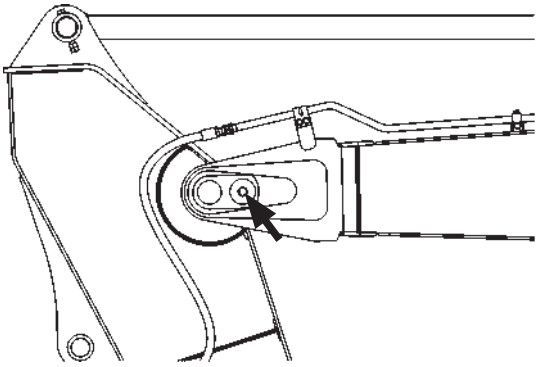

MDCS-07-004-1 ja

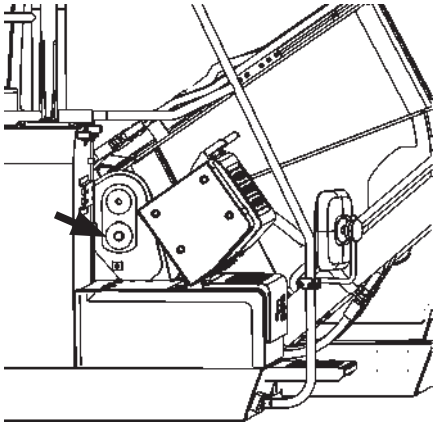

MDC1-07-099-1 ja

Boom Cylinder Bottom Pin-Retaining Bolts
(Only ZX330-7 class)

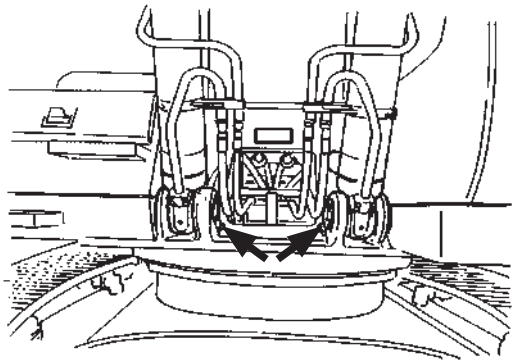

M173-07-016-1 ja

Boom Top, Arm Cylinder Bottom and Rod Pin-Retaining Bolts
(Boom Top Pin-Retaining Bolts: 3 (Only ZX300-7, ZX330-7 class))

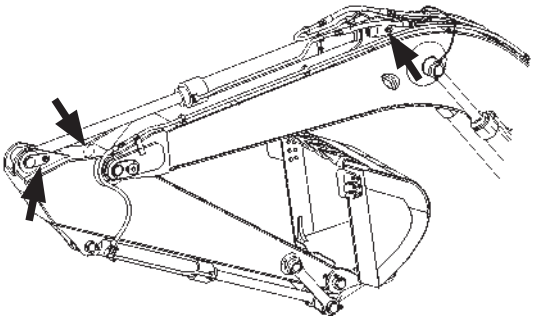

MDCA-07-001-1 ja

J. Aftertreatment Device

1 Check, Clean and/or Replace Filter of Aftertreatment Device

ZX120-7 class
Replace--- every 4500 hours
ZX160-7, 180-7 class
Check---Every 6000 hours
ZX200-7, 240-7, 300-7, 330-7 class
Check, Clean---Every 8000 hours

Contact your authorized dealer for checks and cleaning.

2 Check and Clean Aftertreatment Device

---as required

IMPORTANT

- **Check and clean away any flammable materials in the area around the aftertreatment device (1).**
- **Condensation may blow out from exhaust outlet (2) of aftertreatment device (1) and black deposits may be observed; it is not a malfunction.**

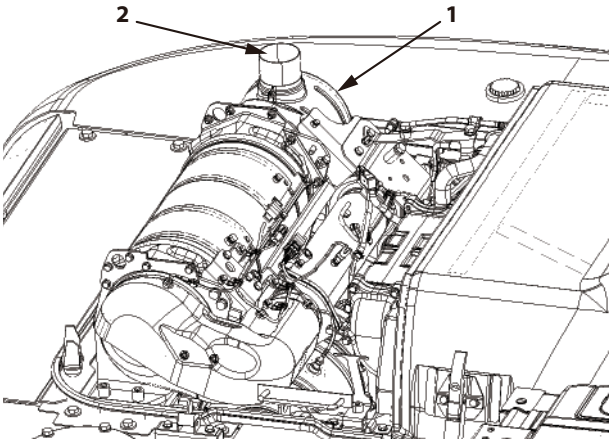

MDFY-07-044-1 ja

Do not disassemble the base machine support parts and sensors.

When the machine is operated in dusty areas, refer to chapter 9 "Maintenance Under Special Environmental Conditions".

1. Open the engine cover.
2. Check the exhaust temperature sensor, differential pressure sensor, NOx sensor (Except ZX120-7 class), dosing module (Except ZX120-7 class), A/F sensor (Only ZX120-7 class), and connector harnesses for abnormalities.
3. Securely close the engine cover.
   Clean it if necessary.

K. Urea SCR System (Except ZX120-7 class)

WARNING

Fill specified DEF into the DEF tank.
If improper DEF is refilled, fire or system failure may result. If improper liquid is refilled in the DEF tank, consult your authorized dealer for check or repair.

Specified DEF

Refill DEF which meets Japanese Industrial Standards (JIS K2247), International Organization for Standardization (ISO 22241) or Deutsche Industrie Normen (DIN 70070). If improper liquid (diesel oil, kerosene or gasoline) is refilled in the DEF tank, fire or system failure may result. The specified DEF is colorless and odorless solution (urea 32.5%, water 67.5%) which begins to freeze at -11 °C. When storing unused DEF, it is recommended to store it within the temperature range of -10 to 30 °C. It deteriorates down more readily at 40 °C.

In some cases, specified area solution is referred to by one or more of these names:

- Aqueous Urea Solution 32
- AUS 32
- NOx Reduction Agent
- Catalyst Solution

CAUTION

- **DEF is colorless and harmless solution. It is harmless when contacting with the body, however, it may cause skin to become inflamed depending on the constitution of the individual. Flush DEF with clean water when it contacts on the skin.**
- **If you swallow DEF by mistake, drink 1 or 2 cups of water or milk and seek immediate medical attention.**
- **If DEF is accidentally splashed into eyes, flush with water for 15 minutes or longer and get emergency medical attention.**

IMPORTANT

- **Use dedicated container recommended by the business entity who is handling DEF to store DEF. Do not use general container, a container used for other purpose and contaminated container because the quality of DEF deteriorates.**
- **The DEF is non-combustible, however, move DEF to a safe place when fire occurs.**
- **Wash out spilled DEF with clean water.**
- **Seal the container and store it in a well ventilated place. If DEF freezes, the quality does not change just after freezing.**
- **As long as sealed by an airtight stopper, unless water evaporates DEF will not deteriorate within the guarantee period.**
- **Do not pour waste DEF and its containers onto the ground, and do not allow waste to flow into rivers and/or lakes. When disposing DEF, make sure to let authorized industrial waste disposal contractor dispose of it appropriately.**

1 Check DEF

. . . Daily inspection

Park the machine on a firm, level surface and lower the bucket to the ground. Check the fuel level with DEF gauge (1).

If necessary, stop the engine and add DEF.

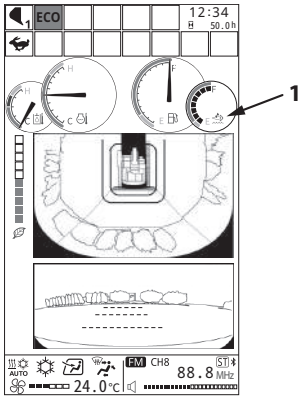

MDFY-MT-100-9 ja

Refill with Def

CAUTION

- **Refill def which meets Japanese Industrial Standards (JIS K2247), International Organization for Standardization (ISO 22241) or Deutsche Industrie Normen (DIN 70070) in DEF tank (2). If low density def is refilled, alarm will be generated, restricting machine operation. Do not dilute def with water.**
- **Do not add any additives to the specified def. Similarly, do not use def that already has additives in it. Doing so may cause damage to the machine.**
- **Wear safety equipment such as safety glasses or goggles, rubber globes appropriate to the job.**
  Wash def with clean water when it contacts on the skin. If def is accidentally splashed into eyes, flush with water for 15 minutes or longer and get emergency medical attention.

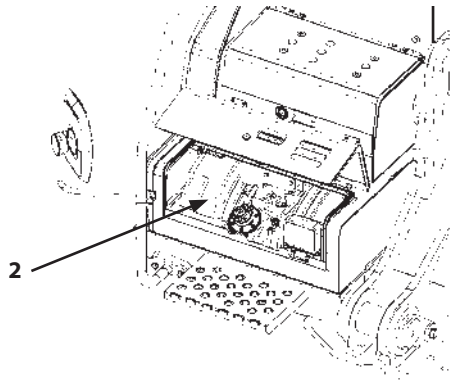

MDC1-07-064-1 ja

1. Park the machine according to the instruction on "Preparations for Inspection and Maintenance" .
2. DEF tank (2) is located in the cover at right front of the machine. Open the cover with the key. Holding the handle on the access cover, raise the cover until the cover is secured with catch.
   Prior to starting to refill, make sure no contaminants, such as sand or dust, are on the def refill container or the port of the def device.

3. Clean dust and mud around the filler port of DEF tank with clean cloth.

Model	DEF Tank Capacity
ZX160-7, 180-7 class ZX210LCN-7, 240N-7	35 L
ZX210LC-7	57 L
ZX240-7, 300-7, 330-7 class	70 L

4. Remove cap (4) from DEF tank (2) and refill def. Be sure to stop refilling before the "F" line by checking the level gauge (5) float (A).

IMPORTANT

- **Make sure the containers and equipment used for refilling are free of contaminants, such as sand, mud and dirt. If any contaminants are present, either rinse them off with soft water or wipe them off with a clean cloth before refilling.**
- **Take care not to allow dust and/or water to enter the DEF tank when refilling.**
- **Put cap (4) of DEF tank (2) on the cap holder (3) to prevent the cap from contamination.**
- **If def is filled above the "F" line, the system may be damaged during operation or DEF tank (2) may be broken when frozen.**

5. Install cap (4) after refilling def. Close the tank cover and lock it with the key.

IMPORTANT

- **Do not get on top of DEF tank (2) or sensors and piping on the tank. Failure to do so may damage the machine.**
- **If it becomes necessary to refill def when cap (4) can not be removed due to freezing, use emergency filler port (6).**
- **White deposits may be observed when def is dried naturally; it is normal. Wash out def deposits with soft water. Never use a high pressure washer.**

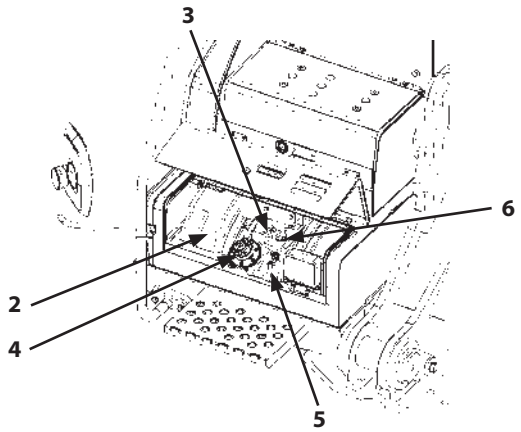

MDC1-07-064-2 ja

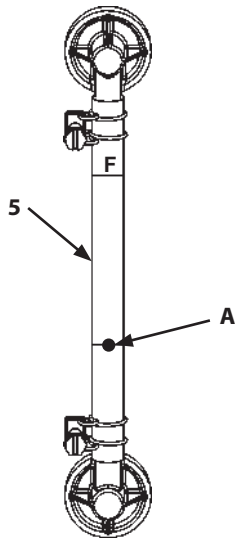

Level Gauge

MDC1-07-053-2 ja

NOTE

- *Wipe spilled def and wash spilled area with plenty of water.*
- *The sound of flowing water may be heard from the tank after the engine stops. It is the sound of returning def from piping to the tank, not a malfunction.*
- *Def will freeze at low temperature, and deteriorate (ammonification) at high temperature. Store def at temperature between -10 and 40°C.*
- *Use dedicated container (purchased container) to store or carry def. Alternatively use a polyethylene resin tank, or stainless steel tank.*

Extendable Filler Neck

When refilling DEF using a container with a short nozzle, use the extension filler neck attached to the machine for easy refilling.

CAUTION

Wear safety equipment such as safety glasses or goggles, rubber gloves appropriate to the job. Wash off DEF with clean water if it comes in contact with skin. If DEF is accidentally splashed into the eyes, flush with water for 15 minutes or longer and get emergency medical attention.

IMPORTANT

Take care that dust does not get in while working.

1. Hold projecting part (1) of adapter (2) with your fingers and twist clockwise 90 degrees.

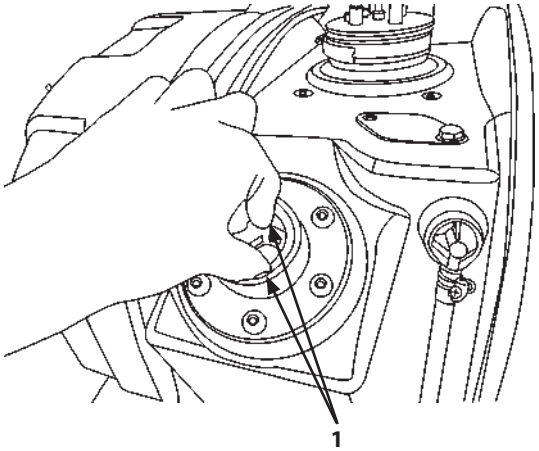

MDC1-07-031-1 ja

2. Pull out adapter (2) . Strainer (3) comes out with adapter (2) at the same time.

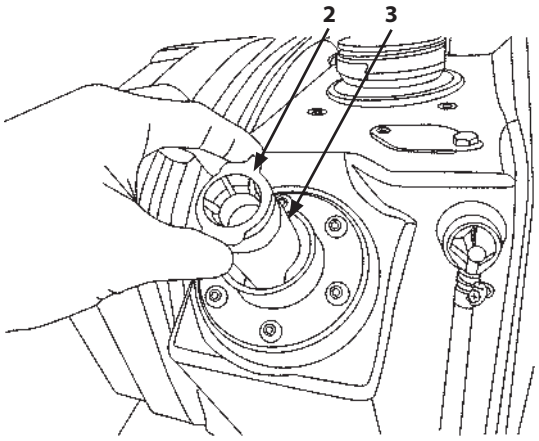

MDC1-07-032-1 ja

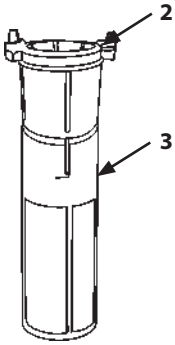

3. Install strainer (5) for the extension filler neck into holder (4) .

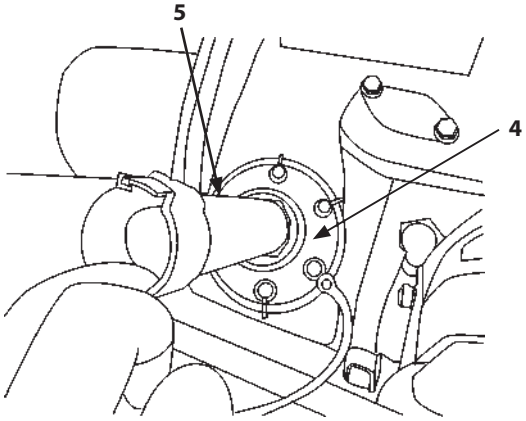

MDC1-07-033-1 ja

4. Insert extension filler neck (6) into the filler port, twist clockwise 90 degrees to lock in place and then fill with DEF.

   NOTE

   After filling with DEF, remove extension filler neck (6) and twist counterclockwise 180 degrees to put it into strainer (5) .

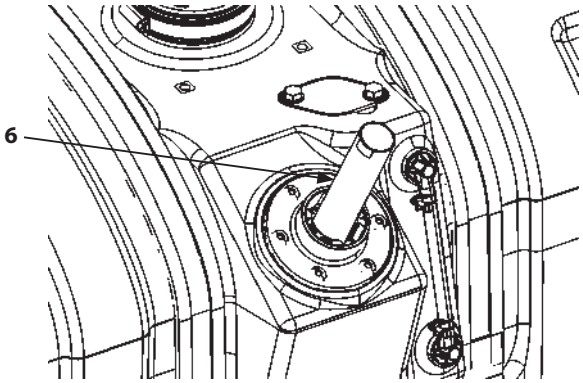

MDC1-07-030-1 ja

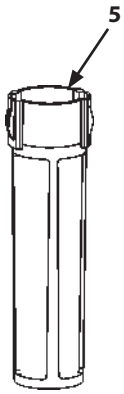

MJAG-07-071-1 ja

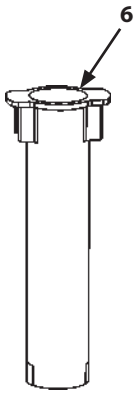

MJAG-07-070-1 ja

Clean Filler Port Strainer

Strainer (1) is provided on the filler port of the DEF tank. Clean strainer (1) if dirt or dust is observed.

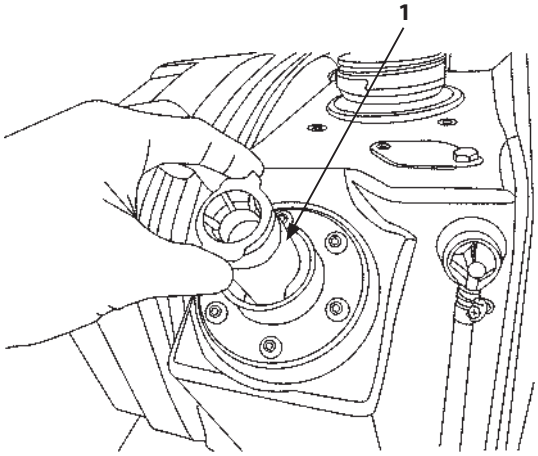

MDC1-07-032-2 ja

CAUTION

Wear safety equipment such as safety glasses or goggles, rubber gloves appropriate to the job. Wash DEF with clean water when it contacts with the skin. If DEF is accidentally splashed into eyes, flush with water for 15 minutes or longer and get emergency medical attention.

IMPORTANT

Take care not to allow dust to contaminate the area when carrying out the work.

1. Remove strainer (1) from the filler port of the DEF tank.
2. Clean strainer (1) with compressed air pressure (lower than 0.2 MPa (2 kgf/cm^2)) or tap water.
3. Install strainer (1) on the filler port of the DEF tank.

NOTE

If extendable filler neck (2) is used, clean strainer (3).

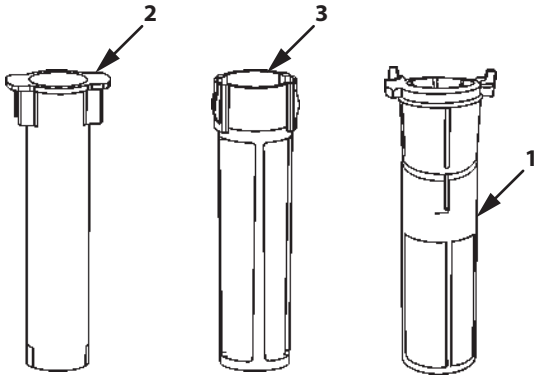

MDFY-07-104-1 ja

Change DEF

CAUTION

Wear safety equipment such as safety glasses or goggles, rubber gloves appropriate to the job. Wash off DEF with clean water if it comes in contact with skin. If DEF is accidentally splashed into the eyes, flush with water for 15 minutes or longer and get emergency medical attention.

IMPORTANT

When contaminated or deteriorated DEF is used, malfunction may result. Change DEF periodically to keep the inside of the tank clean.

1. Remove bolts (1) and cover (2) .
2. Place a 70 liter or larger container under drain plug (3).
3. Slowly loosen drain plug (3) to drain DEF.
4. Tighten drain plug (3) after draining DEF.
   Wrench size: 13 mm
   Torque: 19.5 N·m (1.95 kgf·m)
5. Secure cover (2) with bolts (1) .

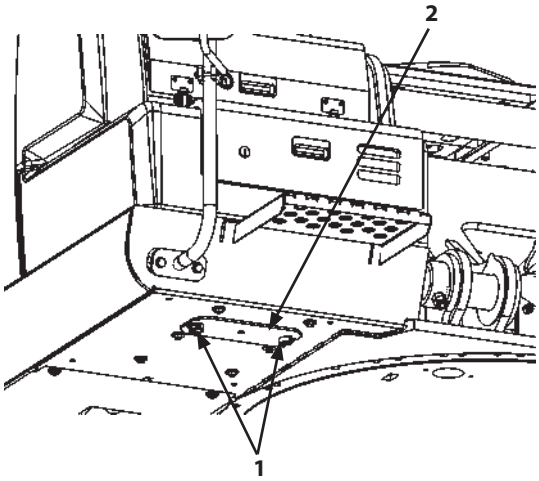

MDC1-07-034-2 ja

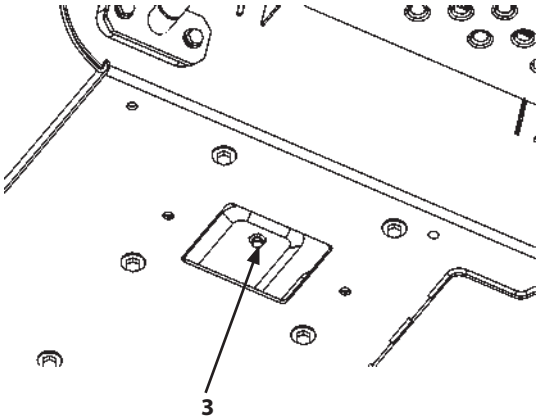

MDC1-07-028-2 ja

2 Replace DEF Supply Module Main Filter

--- every 4500 hours (Every 3 years or 4500 hours whichever comes first for ZX160-7, 180-7 class)

A filter (4) is mounted in the DEF pump. Periodically replace filter (4).

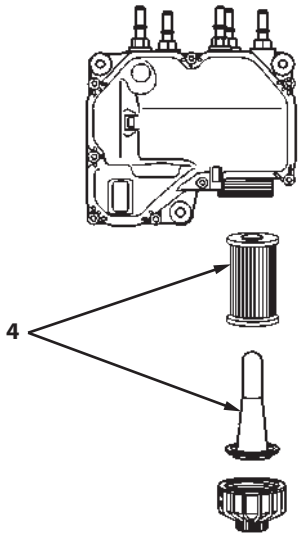

MLAD-07-037-2 ja

CAUTION

Wear safety equipment such as safety glasses or goggles, rubber gloves appropriate to the job. Wash DEF with clean water when it contacts with the skin. If DEF is accidentally splashed into eyes, flush with water for 15 minutes or longer and get emergency medical attention.

IMPORTANT

- **Take care not to allow dirt and/or water to enter the DEF tank while replacing filter (4).**
- **Check for leaks around the mounting position after replacement.**
- **White deposition may be observed when DEF is dried naturally; it is normal. Wash out DEF deposition with clean water. Never use a high pressure washer.**

1. Park the machine according to the instruction on Preparations for Inspection and Maintenance (7-8).
2. ZX160-7, 180-7 class
   Open right, rear cover.

   ZX200-7, 240-7, 300-7, 330-7 class
   Remove cover (2).
3. Remove cap (3) from the DEF pump by using a 27 mm bihexagon wrench.
4. Pull out filter (4) inside the pump. As it is tightly mounted, it can not be pulled by hands. Use tools such as a pliers. Replace filter (4) assembly when replacing filter (4) of DEF supply module.
5. Install new filter (4), and tighten cap (3) with 20±5 N·m (2.0±0.5 kgf·m, 15±3.7 lbf·ft) torque.
6. Fix cover (2).

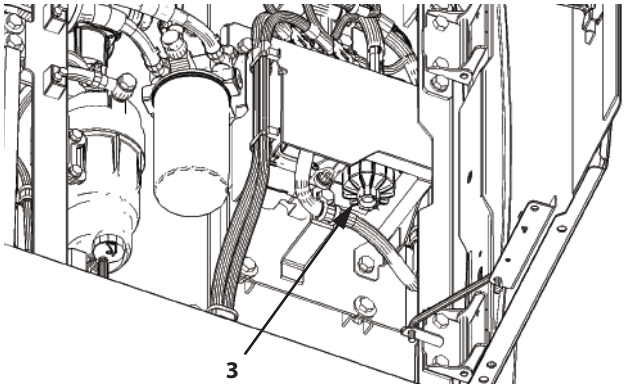

ZX160-7, 180-7 class

MDFY-07-152-1 ja

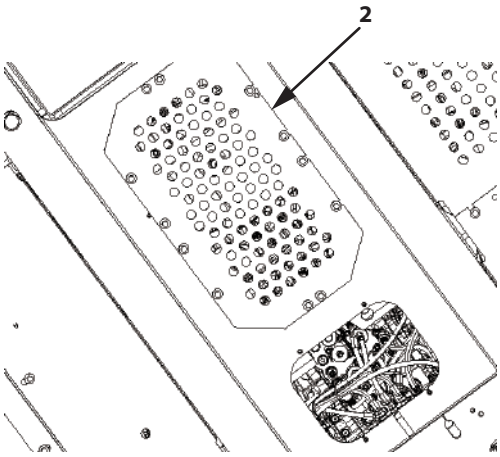

ZX200-7, 240-7, 300-7, 330-7 class

MDFY-07-105-1 ja

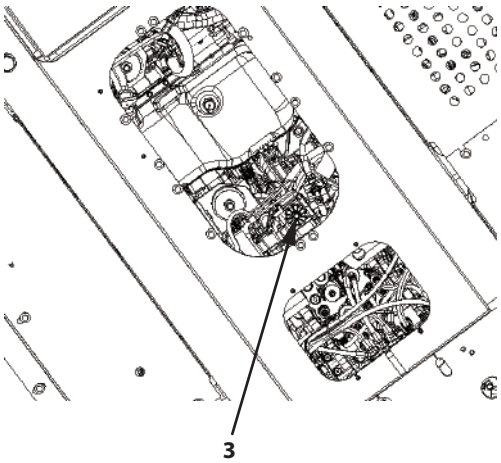

MDFY-07-106-1 ja

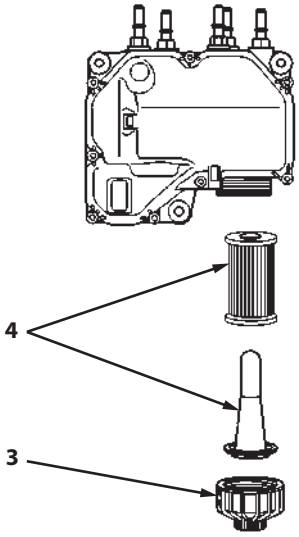

MLAD-07-037-3 ja

3 Replace DEF Tank Water Supply Inlet Filter

---every 4500 hours, or if DEF spills while filling

IMPORTANT

Replace the filter; do not clean it. Trying to clean and reuse it may cause a malfunction.

The filter inside the water supply inlet of the DEF tank must be replaced periodically. When it is time to replace it, contact your authorized dealer.

L. Aerial Angle

1 Daily Check of Camera Images used to Compose the Aerial Angle

--- daily (before starting the engine)

Check Procedure

1. Turn key switch (1) to the ON position.
2. Push screen selector switch (3) check that the image changes on main monitor (2).
3. Set main monitor (2) to display the surrounding image and check that all the camera images are being output, and that there is no problem with visibility in the image.

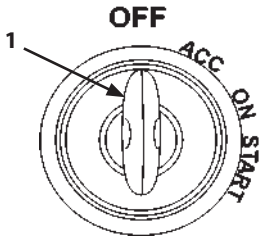

MDCD-01-030-2 ja

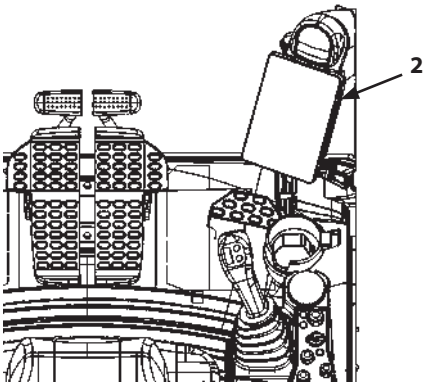

MDFY-01-028-2 ja

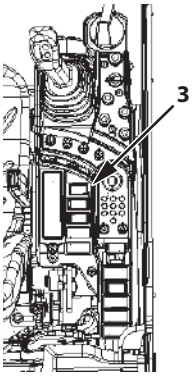

MDFY-01-117-1 ja

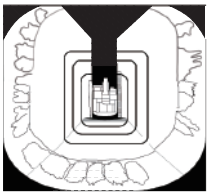

Surrounding Image

MDFY-07-107 ja

IMPORTANT

- **If the image is not clear, clean the lenses of the offending cameras or monitor to make the image clear. Always ensure good footing when cleaning the cameras.**
- **If cleaning the camera lenses and monitor does not improve visibility, or if part of the image is missing, contact your authorized dealer.**

NOTE

The surfaces of main monitor (2) and the camera lenses are made of plastic. When cleaning them, use a clean water-dampened cloth and wipe lightly. Never use an organic solvent.

2 **Check Camera Images Used to Compose the Aerial Angle**

--- after performing work that affects the installation position of the cameras

IMPORTANT

After performing work that affects the installation position of the cameras (detachment of brackets or counterweight where cameras are mounted, camera replacement etc.), it may be necessary to redo the camera composition settings. Follow the check procedure below to check whether the camera images are being displayed normally.

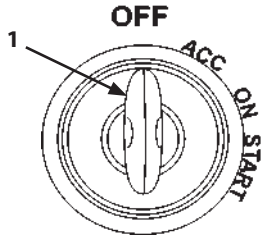

MDCD-01-030-2 ja

Turn key switch (1) ON and check that there are no problems with the surrounding image using the following procedure.

Preparation for Check

1. Select a site with a firm and level surface.
2. Ensure that there is a space of 3 m around the machine.
3. For this check, 2 or 3 people are required. An operator is needed to check the images from inside the cab and a pointer (person walking around the machine). In some cases, a third person may be required to pass instructions from the operator to the pointer.
4. Before starting the collaborative check, meet to decide on matters such as how to signal to each other.
5. Lower the bucket to the ground and set pilot shut-off lever (2) to the LOCK position.

Check Procedure

1. Display the surrounding image.
2. The pointer walks along imaginary line (A) that is 1 m away from upperstructure (3).
3. The operator in the cab looks at the monitor image and checks whether the pointer is always visible.

IMPORTANT

- **If the pointer disappears at any location, it is necessary to redo the camera composition settings. Contact your authorized dealer.**
- **If the 1m, 3m and 5m guide lines are not positioned correctly, contact your authorized dealer.**

SA-390 ja

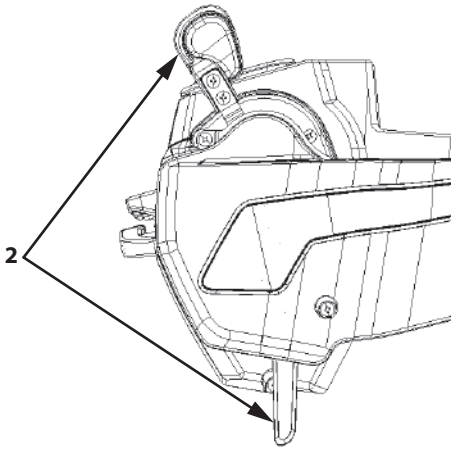

MDFY-01-088-4 ja

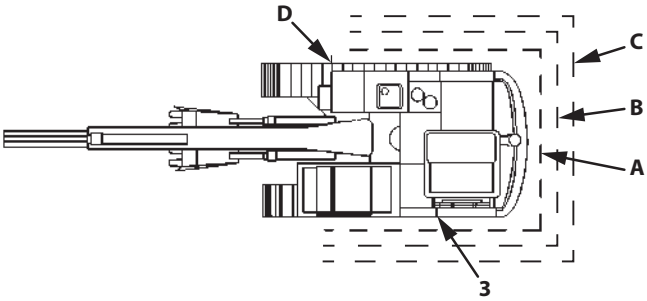

MDFY-07-063-2 ja

A: 1 m line B: 3 m line

C: 5 m line D: As far as tool box

Reference Information

This table provides maintenance intervals for just the engine. To extend the life of the machine itself and ensure it manifests its full functionality and performance, perform inspections and maintenance on the machine according to the Maintenance Guide.

Engine Model (4HK1, 6HK1)

Parts		Interval								
		8	50	100	250	500	1000	4000	4500	8000
1.	Change Engine Oil					■				
2.	Replace Oil Filter Element						■			
3.	Drain water in fuel					■				
4.	Replace Fuel Main Filter						■			
5.	Supply Pump Strainer Check/Clean					■				
6.	Check and Clean Injector								■	
7.	Check Fan Belt					■				
8.	Change Coolant	Once a year								
9.	Clean and Replace Air Cleaner Element	Depends on Machine								
10.	Air Cleaner Check						■			
11.	Check Turbocharger									■
12.	EGR Valve Check and Clean									■
13.	EGR Cooler Check and Clean									■
14.	Check and Clean Aftertreatment Device									■
15.	Inspect Differential Pressure Sensor									■
16.	Replace DEF Supply Module Main Filter							■		
17.	Inspect Urea SCR System									■
18.	Inspect Dosing Module									■
19.	Inspect Starter						■			
20.	Inspect Alternator						■			
21.	Inspect and Adjust Valve Clearance						■			
22.	Measure Engine Compression Pressure						■			

MEMO

Hydraulic Circuit

Example: ZX240-7,300-7,330-7 class

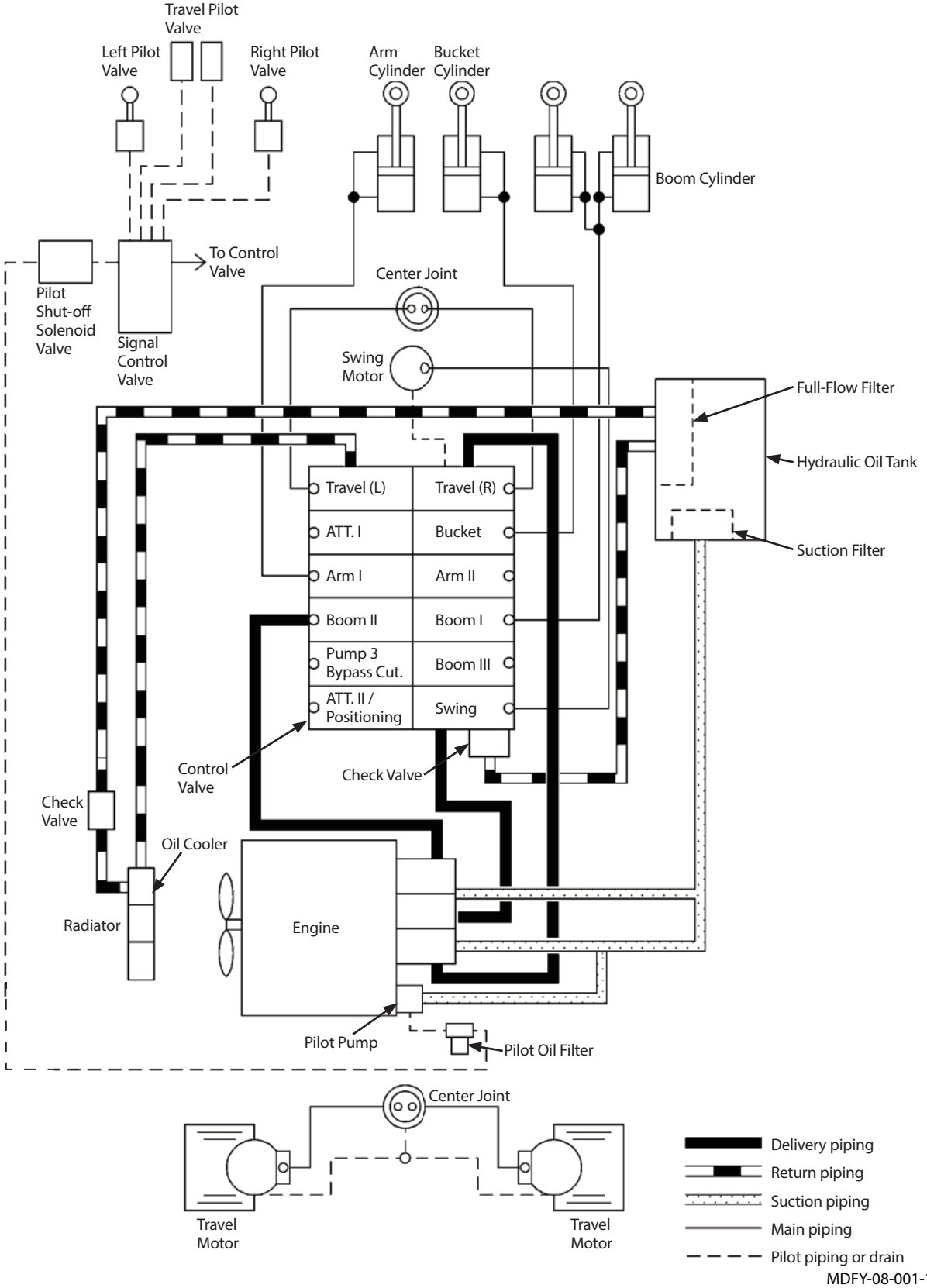

MDFY-08-001-1 en_GB

MEMO

Maintenance Under Special Environmental Conditions

Operating Conditions	Precautions for Maintenance		
Muddy Soil, Rainy or Snowy Weather	After Operation	:	Clean the machine and check for cracks, damage, loose or missing bolts and nuts. Lubricate all necessary parts without delay.
Near the Ocean	After Operation	:	The following salt pollution measures must be taken when the machine is operated at sea or near the coastline. (1) After completing the work, extend/retract the hydraulic cylinders several times to form an oil film on the rod surface. Store the machine with cylinders retracted as much as possible. (2) Thoroughly clean the machine with fresh water to wash off salt. (3) To prevent corrosion, perform touch up painting periodically on hose fittings, lubrication piping and inserting position of cover, where sea water is easily collected. (4) During storage of the machine, cover the machine with tarpaulin to prevent sea water from entering into the cab vent. Apply rust prevention oil (example: ANTIRUST P-1300NP-3 JX Nippon Oil & Energy Corporation) onto plated part of the cylinder rods.
Dusty Atmosphere	Radiator	:	Clean the radiator to prevent clogging of the radiator core.
	Engine, Aftertreatment Device	:	Clean earlier than the normal interval to prevent dust from sticking and accumulating. Inhibit the aftertreatment device regeneration according to the machine operating condition.
Rocky Ground	Tracks	:	Carefully operate while checking for cracks, damage and loose bolts and nuts. Loosen the tracks a little more than usual.
	Front Attachment	:	Standard attachment may be damaged when digging rocky ground. Reinforce the bucket before using it, or use a heavy duty bucket.
Falling Stones	Cab Head Guard	:	Provide a cab guard to protect the machine from falling stones. Consult your authorized dealer.
Freezing Weather	Fuel/Lubricant	:	Use high quality and low viscosity fuel and oil.
	Engine Coolant	:	Be sure to use antifreeze.
	Battery	:	Fully charge the batteries at shorter intervals. If not fully charged, electrolyte may freeze.
	Track	:	Keep the tracks clean. Park the machine on a hard surface to prevent the tracks from freezing to the ground.
	DEF	:	May become frozen but the machine can be operated normally.

MEMO

Storing the Machine

If the machine is to be stored for longer than 1 month, pay attention to the following points in preparation for using it the next time.

Storing the Machine

Item	Remedy
Machine Cleaning	Wash the machine. Remove soil or other debris on the machine.
Lubrication/Greasing	Check lubricants for level and contamination. Fill up or change if necessary. Lubricate all grease points. Grease exposed metal surfaces that are subject to rust. (i.e. cylinder rods etc.)
Battery	Remove the batteries and store them in a dry, protected place after charging them fully. Put the battery disconnect switch in the OFF position (position c).
Coolant	Add anti-rusting agent. If storing in an extremely cold area, either add extra anti-freeze or drain coolant completely to avoid freezing. In this case, place a sign reading "NO COOLANT".
Dust and Moisture Protection	Store the machine in a dry storage area using a protective cover.
Tools	Inspect and repair, then store.
Lubrication Operation	If the oil film on the metal surfaces is lost, rust may form. This may cause abnormal wear of the machine when the machine operation is restarted. Operate the AC and the following hydraulic functions at least once a month for lubrication. Travel, swing and digging. Be sure to check the coolant level and lubrication conditions before operating.
DEF	Components of the liquid may hydrolyze into ammonia if kept at 40 °C or higher for a month or more. Open the cap of the tank and if it smells like ammonia, replace it. Do not check the smell directly from the supply port or the breather.

NOTE

- *Lubricating operation means a series of warm-up, travel, swing and digging operations carried out repeatedly 2-3 times at slow speed.*
- *Lubricants deteriorate during long term storage of the machine. Be sure to carefully check the lubricants before resuming operation of the machine.*

Precautions for Disconnecting or Connecting Batteries

If the battery has been removed for over one month, or if connecting a new battery, contact your authorized dealer. Resetting the Information Controller may be required.

a: ON position

b: OFF position (with communication terminal power supply ON)

c: OFF position

Precautions for Simple Inspection of Air Conditioner

If a simple inspection comes due during long-term storage, contact your authorized dealer.

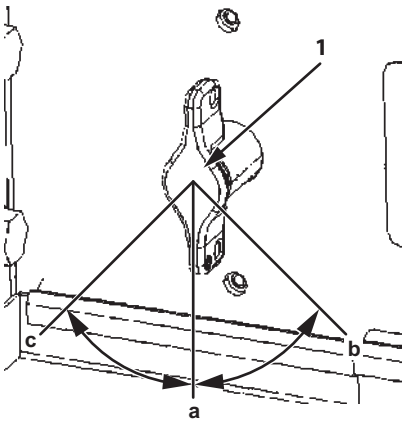

MJAQ-01-001-1 ja

MEMO

Troubleshooting

If any problems with the machine occur, repair them immediately. Confirm the cause and takes steps to prevent recurrence.

If it is difficult to determine the cause, or if measures marked with * must be taken, consult your authorized dealer.

IMPORTANT

Never attempt to disassemble, adjust or repair hydraulic or electrical/electronic components.

Engine

Consult your authorized dealer for engine troubleshooting.

Engine Auxiliaries

Problem	Cause	Solution
Batteries fail to charge	Damaged battery separator	Replace
	Faulty regulator	Adjust or replace*1
	Faulty ground line	Repair*1
	Faulty alternator	Repair or replace*1
Batteries discharge quickly after being charged	Shorted cable	Repair or replace*1
	Plates inside the battery are shorting	Replace
	Increased sediment in battery	Replace
Coolant temperature too high	Low coolant level	Refill
	Insufficient V-belt tension	Adjust*2
	Damaged rubber hose	Replace*1
	Faulty thermostat	Replace*1
	Faulty coolant temperature gauge	Replace*1
	Radiator and entire screen clogged	Clean

*1Marked: Contact your authorized dealer.

*2Marked: The ZX120-7, 160-7 and 180-7 class have an automatic tensioner so cannot be adjusted.

Impossible to Start the Engine

Problem		Cause	Solution
Engine will not start	Starter does not rotate or is not powerful.	Discharged battery	Charge or replace battery.
		Disconnected, loose, or corroded battery terminals	After repairing the corroded area, securely tighten the connectors.
		Pilot shut-off lever is in the UNLOCK position.	Set the pilot shut-off lever to LOCK position.
		Disconnected, loose, or corroded starter ground line terminals.	After repairing the corroded area, securely tighten the connectors.
		Faulty pilot shut-off lever electrical system	Repair
		Too high engine oil viscosity	Change engine oil with appropriate viscosity.
		Faulty starter and/or electrical system	Repair and replace*1
		Battery Disconnect Switch is in the OFF position	Turn the battery disconnect switch to the ON position
	Starter rotates.	No fuel	After checking that no fuel is leaking, refill fuel.
		Air in the fuel system	Bleed air.
		Clogged fuel main filter	Replace element
		Clogged fuel pre-filter	Replace element
		Frozen fuel	Warm the fuel pump with hot water or wait until the atmospheric temperature rises.
		Engine stop switch is ON	Turn the engine stop switch to the OFF position.
		Faulty preheat system	Repair and replace*1

Problem	Cause	Solution
Even though the engine is started, the engine stalls soon.	Too low idle speed	Repair and replace*1
	Clogged fuel main filter	Replace element.
	Clogged fuel pre-filter	Replace element.
	Faulty engine control system	Repair and replace*1
	Clogged air cleaner	Clean or replace the element.
	Faulty fuel system	Repair and replace*1
Engine runs irregularly.	Faulty fuel system	Repair and replace*1
	Water or air in the fuel system	Drain water or bleed air.
	Faulty engine control system	Repair and replace*1
	Clogged aftertreatment device	Repair and replace*1

*1 Marked: Consult your authorized dealer.

Control Lever

Problem	Cause	Solution
Lever is heavy to operate.	Rusted joint	Grease, repair*1
	Worn pusher	Replace*1
Does not move smoothly.	Worn pusher	Repair or replace*1
	Faulty pilot valve	Replace*1
Does not return to neutral	Faulty pilot valve	Replace*1
The lever is tilted in the neutral position due to increase in play.	Worn joint	Repair or replace*1
	Faulty pilot valve	Replace*1

*1 Marked: Contact your authorized dealer.

Hydraulic System

When the machine is stored without running for a long period, air mixed in hydraulic oil will separate and accumulate in the upper part of cylinders, causing a delay in the response time of machine movements and/or weak power.

If these symptoms appear, operate all actuators repeatedly several times.

Problem	Cause	Solution
No hydraulic functions (Noise from hydraulic pump)	Faulty hydraulic pump	Repair or replace*1
	Hydraulic oil low	Refill
	Broken suction pipe and/or hose	Repair or replace*1
No hydraulic functions (Hydraulic pump noise remains unchanged.)	Faulty pilot pump	Replace*1
	Faulty pilot shut-off solenoid valve	Replace*1
	Faulty wire harness (pilot shut-off solenoid valve) pilot shut-off switch.	Repair or replace*1
	Set the pilot shut-off lever to the LOCK position.	Turn to the UNLOCK Position.
No actuators have any power.	Malfunction due to worn hydraulic pump	Replace*1
	Decreased main relief valve set pressure in the control valve	Adjust*1
	Hydraulic oil low	Refill
	Clogged suction strainer in the hydraulic oil tank	Clean
	Absorption of air from the oil suction side	Retighten
	Faulty pressure sensor.	Replace*1
	Faulty solenoid valve	Replace*1
Only one side lever is inoperable or has no power.	Faulty relief valve in the valve	Repair or replace*1
	Broken pipe and/or hose	Repair or replace*1
	Loose pipe line joint	Retighten
	Broken O-ring at pipe line joint	Replace*1
	Faulty hydraulic pump	Repair or replace*1
	Faulty pilot valve	Replace*1
	Faulty pilot circuit line	Repair or replace*1
	Faulty pilot solenoid valve	Repair or replace*1

Problem	Cause	Solution
Only one actuator is inoperable.	Broken control valve spool	Replace*1
	Embedded foreign matter in valve spool	Repair or replace*1
	Broken pipe and/or hose	Repair or replace*1
	Loose pipe line joint	Retighten
	Broken O-ring at pipe line joint	Replace*1
	Broken actuator	Repair or replace*1
	Faulty pilot valve	Replace*1
	Faulty pilot circuit line	Repair or replace*1
	Faulty pilot solenoid valve	Repair or replace*1
Only one cylinder is inoperable or has no power.	Broken oil seal in cylinder	Repair or replace*1
	Oil leak due to damage to cylinder rod	Repair or replace*1
	Faulty pilot valve	Replace*1
	Faulty pilot circuit line	Repair or replace*1
	Faulty pilot solenoid valve	Repair or replace*1
Hydraulic oil temperature increases.	Stained oil cooler	Clean
	Insufficient engine fan belt tension	Adjust
Oil leak from low pressure hose.	Loose clamps	Retighten
	Faulty suction manifold	Repair or replace*1

*1 Marked: Contact your authorized dealer.

Drive Function

Problem	Cause	Solution
One or both side tracks are inoperable.	Damaged center joint	Repair or replace*1
	Incompletely released parking brake	Repair or replace*1
	Broken travel motor	Repair or replace*1
	Faulty pilot valve	Replace*1
	Faulty pilot circuit line	Repair or replace*1
Does not travel smoothly.	Overly tensioned or slackened crawler sag	Adjust
	Lack of lubricant in front idler and/or roller	Refill
	Deformed track frame	Repair or replace*1
	Embedded foreign matter such as rock fragments	Remove
	Dragging parking brake	Repair*1
Travel speed does not change.	Faulty travel mode switch.	Replace*1
	Faulty pressure sensor	Replace*1
	Pump 1 and 2 delivery pressure sensors	
	Pumps 1, 2 control pressure sensors	
	Poor contact in connector	Repair or replace*1
	Damaged wire harness	Repair*1
	Faulty controller (MC)	Replace*1
	Faulty solenoid valve	Repair or replace*1
	Faulty motor	Repair or replace*1

*1 Marked: Contact your authorized dealer.

Swing Function

Problem	Cause	Solution
Upperstructure does not swing	Faulty swing parking brake	Repair or replace*1
	Faulty swing parking brake release valve	Repair or replace*1
	Broken swing motor	Repair or replace*1
	Faulty pilot valve	Replace*1
	Faulty pilot circuit line	Repair or replace*1
Swing is not smooth.	Worn swing gear	Repair or replace*1
	Damaged swing bearing and bearing balls.	Repair or replace*1
	Lack of grease	Refill
	Faulty inversion protective valve	Repair or replace*1

*1 Marked: Contact your authorized dealer.

Just after the control valve, swing motor relief valve and/or the swing motor is replaced, noise may be produced when swinging and its operation may not be smooth. This is because air has accumulated in the hydraulic circuit for swinging.

Slowly continue to operate the machine for approx. 10 minutes to bleed air.

After repair work is complete, be sure to check the oil level in the hydraulic oil tank. Refill hydraulic oil as needed.

Engine Speed

Problem	Cause	Solution
Even if operating the engine control dial, the engine speed does not change.	Blown fuse	Replace
	Faulty engine control dial	Replace*1
	Poor contact in connector	Repair or replace*1
	Damaged wire harness (between EC dial and MC, or MC and ECM)	Repair*1
	Faulty controller (MC, ECM)	Replace*1
	Performing manual regeneration	(Normal control)
Work mode does not change.	Faulty mode switch	Replace*1
	Poor contact in connector	Repair or replace*1
	Damaged wire harness (between MC and monitor)	Repair*1
	Faulty controller (MC)	Replace*1
	Faulty solenoid valve	Repair or replace*1
Auto-idle is inoperable or not released.	Faulty pressure sensor.	Replace*1
	Poor contact in connector	Repair or replace*1
	Damaged wire harness	Repair*1
	Faulty controller.	Replace*1
	Performing manual regeneration	(Normal control)

*1 Marked: Consult your authorized dealer.

Pump control

Problem	Cause	Solution
Front attachment and/or travel speed is slow	Blown control fuse	Replace
	Poor contact in connector	Repair or replace*1
	Damaged wire harness	Repair*1
	Faulty controller	Replace*1
	Faulty pump solenoid valve.	Replace*1
	Faulty pressure sensor.	Replace*1

*1 Marked: Contact your authorized dealer.

Others

The machine may have a noise, excessive vibration, and abnormal smell when any trouble occurs.
Always beware of the machine conditions during operation.

MEMO

Specifications ZX120-7 class

		ZX130-7	ZX130LCN-7
Type of Front-End Attachment	-	2.52 m Arm	
Bucket Capacity (Heaped)	m^3	ISO7451:2007 0.52	
Counterweight Weight	kg	3000	
Operating Weight	kg	13700	13900
Base Machine Weight	kg	10900	11000
Engine Type	-	TOYOTA 1KDE	
Engine Power	kW/min^{-1}	ISO 14396: 74/2000	
		ISO 9249: 73/2000	
Ground Pressure	kPa	43	41
Swing Speed	min^{-1}	13.3	
Travel Speed (fast/slow)	km/h	5.5/3.3	
Gradeability	°(tanθ)	35 (0.70)	

Dimensions ZX120-7 class

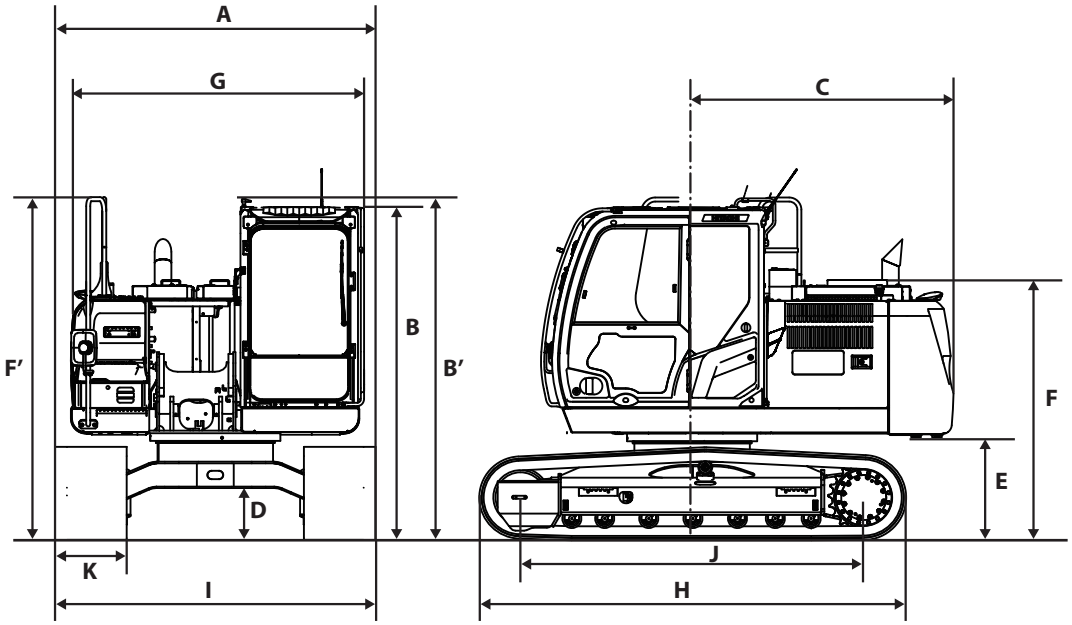

MDFY-12-009-2 ja

			ZX130-7	ZX130LCN-7
A:	Overall Width (Excluding back mirrors)	mm	2490	
B:	Cab Height	mm	2790	
B'	Cab Top Handrail Height	mm	2870	
C:	Rear End Swing Radius	mm	2190	
D:	Minimum Ground Clearance	mm	410*	
E:	Counterweight Clearance	mm	840*	
F:	Engine Cover Height	mm	2190	
F'	Handrail Height	mm	2870	
G:	Overall Width of Upperstructure	mm	2460	
H:	Undercarriage Length	mm	3580	3750
I:	Undercarriage Width	mm	2490	
J:	Sprocket Center to Idler Center	mm	2880	3050
K:	Track Shoe Width	mm	500 (Grouser shoe)	

*The dimensions do not include the height of the shoe lug.

Working Ranges ZX120-7 class

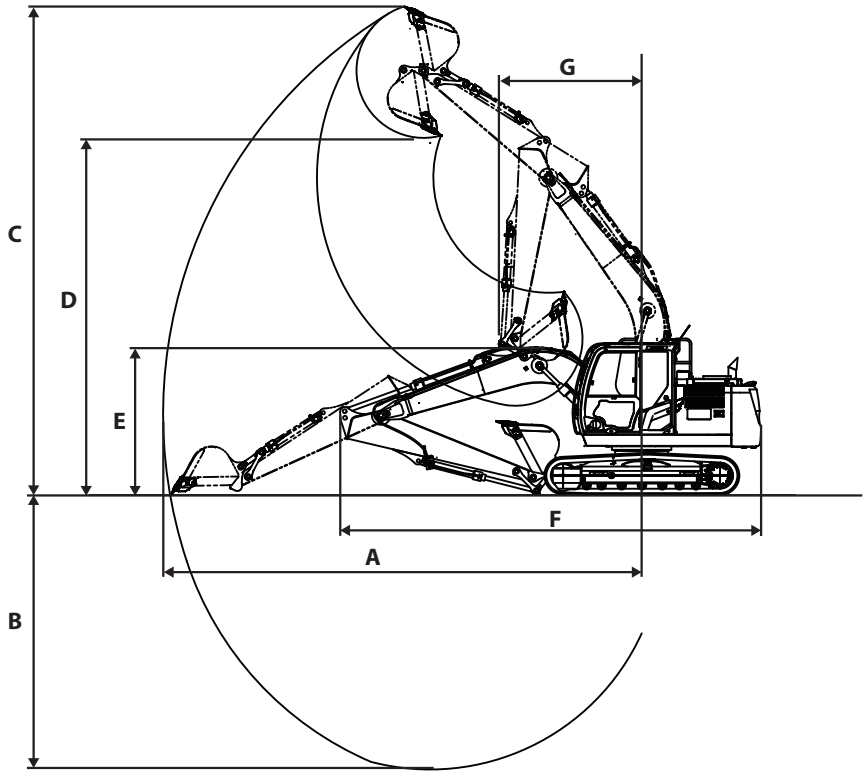

MDFY-12-010-2 ja

Category / Item	2.10 m Arm	2.52 m Arm	3.01 m Arm
	mm	mm	mm
A : Maximum Digging Reach	7940	8300	8770
B : Maximum Digging Depth	5120	5540	6030
C : Maximum Cutting Height	8400	8600	8930
D : Maximum Dumping Height	5990	6190	6520
E : Overall Height	2670	2800	2680*
F : Overall Length	7700	7700	7710*
G : Minimum Swing Radius	2380	2400	2620

* The dimensions do not include the height of the shoe lug(except Item E).* The dimensions asterisked are for transport pin position.

Shoe Types and Applications ZX130-7

Shoe Width		500 mm Grouser Shoe	600 mm Grouser Shoe	700 mm Grouser Shoe	500 mm Pad Crawler
Application		For Ordinary Ground (Standard)	For Weak Footing (Option)	For Weak Footing (Option)	For Weak Footing (Option)
Operating Weight	kg	13700	13900	14100	13600
Base Machine Weight	kg	10900	11100	11300	10800
Counterweight Weight	kg	3000	3000	3000	3000
Cab Height	mm	2870*2	2870*2	2870*2	2910*2
Minimum Ground Clearance	mm	410*1	410*1	410*1	470
Undercarriage Length	mm	3580	3580	3580	3660
Undercarriage Width	mm	2490	2590	2690	2490
Ground Pressure	kPa	43	36	31	42

*1 The dimensions do not include the height of the shoe lug.

*2 The dimensions include the height of the handrail on cab.

NOTE

- *he Specifications for the front-end attachment is for 2.52 m arm with PCSA 0.52 m^3 bucket.*
- *Other than 500 mm grouser shoe should not be used on gravel or rocky ground.*

Shoe Types and Applications ZX130LCN-7

Shoe Width		500 mm Grouser Shoe	600 mm Grouser Shoe	700 mm Grouser Shoe
Application		For Ordinary Ground (Standard)	For Weak Footing (Option)	For Weak Footing (Option)
Operating Weight	kg	13900	14100	14300
Base Machine Weight	kg	11000	11300	11500
Counterweight Weight	kg	3000	3000	3000
Cab Height	mm	2870*2	2870*2	2870*2
Minimum Ground Clearance	mm	410*1	410*1	410*1
Undercarriage Length	mm	3750	3750	3750
Undercarriage Width	mm	2490	2590	2690
Ground Pressure	kPa	41	35	30

*1 The dimensions do not include the height of the shoe lug.

*2 The dimensions include the height of the handrail on cab.

NOTE

- *he Specifications for the front-end attachment is for 2.52 m arm with PCSA 0.52 m^3 bucket.*
- *Other than 500 mm grouser shoe should not be used on gravel or rocky ground.*

Bucket Types and Applications ZX120-7 class

Bucket	Bucket Capacity (m^3)	Bucket Width (mm)		Front-End Attachment			
	ISO7451:2007 (Heaped)	With side cutter	Without side cutter	2.10 m Arm	2.52 m Arm	3.01 m Arm	2.52 m Arm and extension
Hoe Bucket	0.45	920	800	⦿	⦿	○	○
	0.52	1010	890	⦿	⦿	* ○	-
	0.59	1070	950	⦿	○	-	-
Reinforced Hoe Bucket	0.52	1010	890	⦿	⦿	* ○	-
Reinforced Hoe Bucket	0.59	1070	950	⦿	○	-	-
One Point Ripper	-	-	-	△	△	-	-
Slope-Finishing Blade	-	1000 x 1600		◇	◇	◇	-
V-Type Bucket	-			○	○	○	-

NOTE

- *Symbols in the above table have the following meanings.*

  ⦿ : *General excavating*

  ○ : *Light duty excavating*

  △ : *Rock digging*

  □ : *Loading work*

  ◇ : *Slope-finishing work*

  - : *Not applicable (not warrantable)*

- *Hoe bucket is applicable to the following types of work.*
  General excavating:
  For digging and loading operation of sand, gravel, clay, ordinary earth and so on.
  Light duty excavating:
  For digging and loading operation of dry, loosened earth, sand, mud and so on.
  Their bulk density shall be less than 1.60 t/m^3 as a standard.
  Loading:
  For loading operation of dry, loosened earth and sand.
  Their bulk density shall be less than 1.10 t/m^3 as a standard.
  Rock digging:
  For digging/loading operation of mountain gravels, blasted rock, hard clay, soft rock and so on.
- ** Applicable only to 700 mm grouser shoe.*

IMPORTANT

Using inapplicable buckets may cause serious damage to the front structure such as boom, arm and hydraulic cylinders.

Specifications ZX160-7, 180-7 class

		ZX160LC-7	ZX180LC-7	ZX180LCN-7
Type of Front-End Attachment	-	2.58 m Arm	2.71 m Arm	
Bucket Capacity (Heaped)	m^3	ISO7451:2007 0.63	ISO7451:2007 0.70	
Counterweight Weight	kg	3050	3370	
Operating Weight	kg	17700	19200	18900
Base Machine Weight	kg	14200	15200	14900
Engine Type	-	YANMAR 4TN107FHT-6YHB		
Engine Power	kW/ min^{-1}	ISO 14396: 101.3/1900		
		ISO 9249: 98.6/1900		
Ground Pressure	kPa	51	43	51
Swing Speed	min^{-1}	13.3	14.1	
Travel Speed (fast/slow)	km/h	5.3/3.4	5.3/3.4	
Gradeability	°(tanθ)	35 (0.70)		

Dimensions ZX160-7, 180-7 class

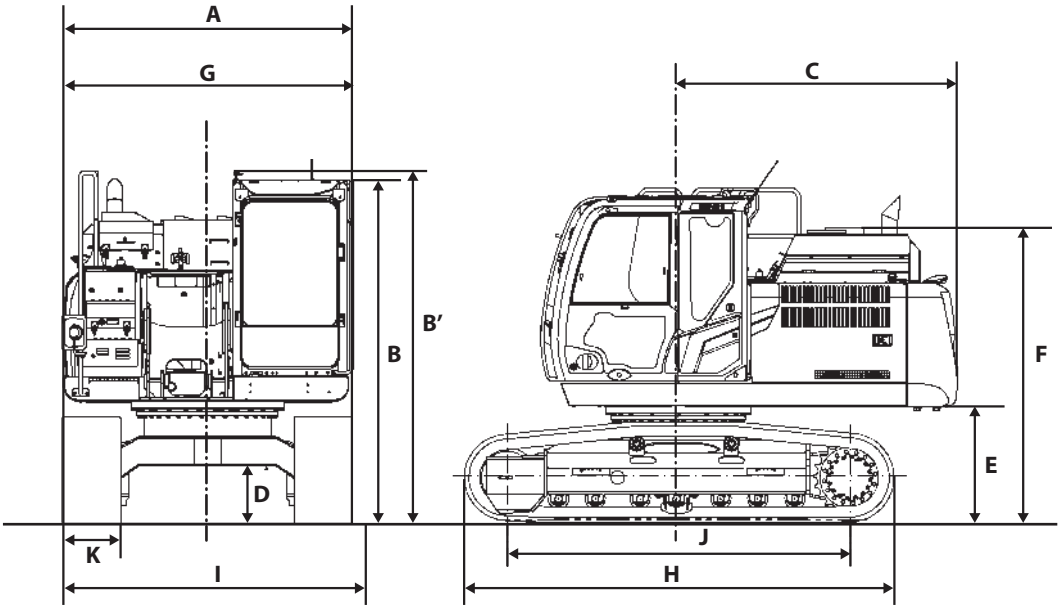

MDFY-12-011-1 ja

		ZX160LC-7	ZX180LC-7	ZX180LCN-7
A: Overall Width (Excluding back mirrors)	mm	2520	2800	2520
B: Cab Height	mm	2950		
B' Cab Top Handrail Height	mm	3020		
C: Rear End Swing Radius	mm	2550		
D: Minimum Ground Clearance	mm	470*1	450*1	
E: Counterweight Clearance	mm	980*1		
F: Engine Cover Height	mm	2650*1		
G: Overall Width of Upperstructure	mm	2500		
H: Undercarriage Length	mm	3920	4170	
I: Undercarriage Width	mm	2500	2800	2500
J: Sprocket Center to Idler Center	mm	3100	3370	
K: Track Shoe Width	mm	500 (Grouser shoe)	600 (Grouser shoe)	500 (Grouser shoe)

*1The dimensions do not include the height of the shoe lug.

Working Ranges ZX160-7, 180-7 class

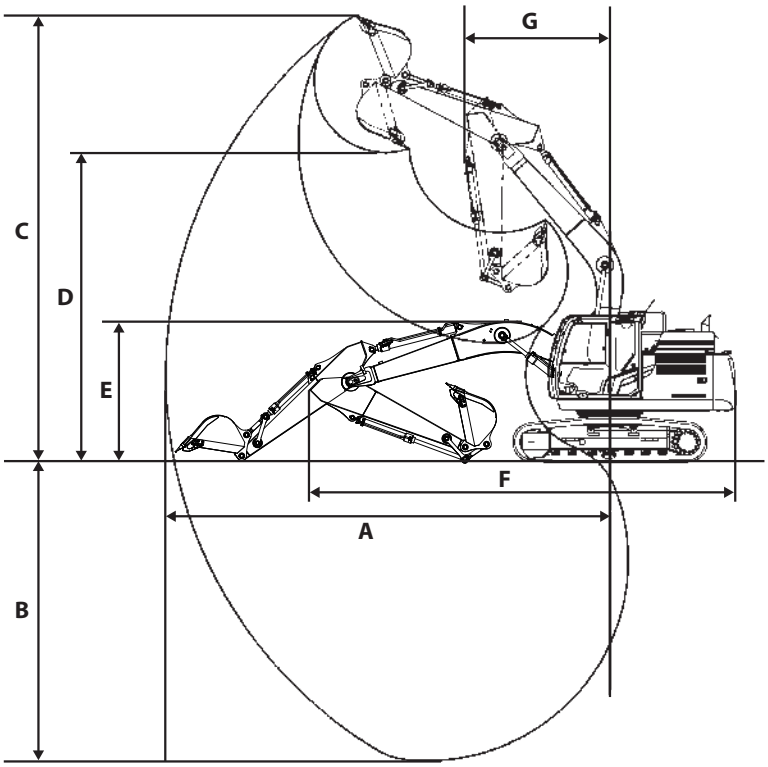

MDFY-12-012-1 ja

Item \ Category	ZX160LC-7	ZX180LC-7, 180LCN-7
	2.58 m Arm	2.71 m Arm
	Backhoe	Backhoe
	mm	mm
A: Maximum Digging Reach	8870	9430
B: Maximum Digging Depth	5980*1	6570*1
C: Maximum Cutting Height	8880*1	9400*1
D: Maximum Dumping Height	6170*1	6570*1
E: Overall Height	3030	3090
F: Overall Length	8620	9050
G: Minimum Swing Radius	2910	3130

*1 The dimensions do not include the height of the shoe lug.

Shoe Types and Applications ZX160LC-7

Shoe Width		500 mm Grouser Shoe	600 mm Grouser Shoe	700 mm Grouser Shoe	800 mm Grouser Shoe
Application		For Ordinary Ground (Standard)	For Weak Footing (Option)	For Weak Footing (Option)	For Weak Footing (Option)
Operating Weight	kg	17700	17900	18200	18500
Base Machine Weight	kg	14200	14400	14700	15000
Counterweight Weight	kg	3050	3050	3050	3050
Cab Height	mm	3020*2	3020*2	3020*2	3020*2
Minimum Ground Clearance	mm	470*1	470*1	470*1	470*1
Undercarriage Length	mm	3920	3920	3920	3920
Undercarriage Width	mm	2500	2590	2690	2890
Ground Pressure	kPa	51	43	37	33

*1The dimensions do not include the height of the shoe lug.

*2The dimensions include the height of the handrail on cab.

Shoe Types and Applications ZX180LC-7

Shoe Width		600 mm Grouser Shoe	700 mm Grouser Shoe	800 mm Grouser Shoe
Application		For Ordinary Ground (Standard)	For Weak Footing (Option)	For Weak Footing (Option)
Operating Weight	kg	19200	19500	19800
Base Machine Weight	kg	15200	15500	15800
Counterweight Weight	kg	3370	3370	3370
Cab Height	mm	3020*2	3020*2	3020*2
Minimum Ground Clearance	mm	450*1	450*1	450*1
Undercarriage Length	mm	4170	4170	4170
Undercarriage Width	mm	2800	2900	3000
Ground Pressure	kPa	43	37	33

*1The dimensions do not include the height of the shoe lug.

*2The dimensions include the height of the handrail on cab.

Shoe Types and Applications ZX180LCN-7

Shoe Width		500 mm Grouser Shoe	600 mm Grouser Shoe	700 mm Grouser Shoe
Application		For Ordinary Ground (Standard)	For Weak Footing (Option)	For Weak Footing (Option)
Operating Weight	kg	18900	19200	19400
Base Machine Weight	kg	14900	15200	15400
Counterweight Weight	kg	3370	3370	3370
Cab Height	mm	3020*2	3020*2	3020*2
Minimum Ground Clearance	mm	450*1	450*1	450*1
Undercarriage Length	mm	4170	4170	4170
Undercarriage Width	mm	2500	2590	2690
Ground Pressure	kPa	51	43	37

*1The dimensions do not include the height of the shoe lug.

*2The dimensions include the height of the handrail on cab.

Bucket Types and Applications ZX160LC-7

Bucket	Bucket Capacity (m^3) ISO7451:2007 (Heaped)	Bucket Width (mm) With side cutter	Application	Front-End Attachment 2.58 m Arm
Hoe Bucket	0.52	910		◉
	0.63	1045		◉
	0.70	1125		○
	0.82	1260		□
Reinforced Hoe Bucket	0.63	1045		◉
Reinforced Hoe Bucket	0.70	1120		○
Slope-Finishing Blade	-	1700 (67")	Bank cutting finish	◇
V-Type Bucket				○

NOTE

- *Symbols in the above table have the following meanings.*

  ◉ : *General excavating*

  ○ : *Light duty excavating*

  △ : *Rock digging*

  □ : *Loading work*

  ◇ : *Slope-finishing work*

  × : *Not applicable (not warrantable)*

- *Hoe bucket is applicable to the following types of work.*
  General excavating:
  For digging and loading operation of sand, gravel, clay, ordinary earth and so on.
  Light duty excavating:
  For digging and loading operation of dry, loosened earth, sand, mud and so on.
  Their bulk density shall be less than 1.60 t/m^3 as a standard.
  Loading:
  For loading operation of dry, loosened earth and sand.
  Their bulk density shall be less than 1.10 t/m^3 as a standard.
  Rock digging:
  For digging/loading operation of mountain gravels, blasted rock, hard clay, soft rock and so on.

IMPORTANT

Using inapplicable buckets may cause serious damage to the front structure such as boom, arm and hydraulic cylinders.

Bucket Types and Applications ZX180LC-7, 180LCN-7

Bucket	Bucket Capacity (m^3) ISO7451:2007 (Heaped)	Bucket Width (mm) With side cutter	Application	Front-End Attachment 2.71 mArm
Hoe Bucket	0.51	830		◉
	0.70	1010		◉
	0.80	1140		◉
	0.91	1260		○
Bucket reinforcement can be welded in four places upon customer's request	0.70	1010		◉
	0.80	1140		◉
	0.91	1260	-	○
V-Type Bucket	-	90 °	Excavating V-trenches	○
Slope-Finishing Blade	-	1800	Bank cutting finish	◇

NOTE

- *Symbols in the above table have the following meanings.*

  ◉ : *General excavating*

  ○ : *Light duty excavating*

  △ : *Loading work*

  ◇ : *Slope-finishing work*

  × : *Not applicable (not warrantable)*

- *Hoe bucket is applicable to the following types of work.*
  General excavating:
  For digging and loading operation of sand, gravel, clay, ordinary earth and so on.
  Light duty excavating:
  For digging and loading operation of dry, loosened earth, sand, mud and so on.
  Their bulk density shall be less than 1.60 t/m^3 as a standard.
  Loading:
  For loading operation of dry, loosened earth and sand.
  Their bulk density shall be less than 1.10 t/m^3 as a standard.
  Rock digging:
  For digging/loading operation of mountain gravels, blasted rock, hard clay, soft rock and so on.

IMPORTANT

Using inapplicable buckets may cause serious damage to the front structure such as boom, arm and hydraulic cylinders.

Specifications ZX210LC-7

		ZX210LC-7
Type of Front-End Attachment	-	2.91 m Arm
Bucket Capacity (Heaped)	m^3	ISO7451:2007 0.80
Counterweight Weight	kg	4850
Operating Weight	kg	22600
Base Machine Weight	kg	17900
Engine Type	-	Isuzu 4HK1
Engine Power	kW/min^{-1}	ISO 14396: 128.4/2000
		ISO 9249: 122/2000
Ground Pressure	kPa	47
Swing Speed	min^{-1}	11.4
Travel Speed (fast/slow)	km/h	5.5/3.5
Gradeability	°(tanθ)	35 (0.70)

Specifications ZX210LCN-7, 240N-7

		ZX210LCN-7	ZX240N-7
Type of Front-End Attachment	-	2.91 m Arm	
Bucket Capacity (Heaped)	m^3	ISO7451:2007 0.80	
Counterweight Weight	kg	4700	
Operating Weight	kg	22000	22800
Base Machine Weight	kg	17400	18300
Engine Type	-	Isuzu 4HK1	
Engine Power	kW/min^{-1}	ISO 14396: 128.4/2000	
		ISO 9249 122/2000	
Ground Pressure	kPa	55	54
Swing Speed	min^{-1}	11.4	
Travel Speed (fast/slow)	km/h	5.5/3.5	
Gradeability	°(tanθ)	35 (0.70)	

Dimensions ZX210LC-7

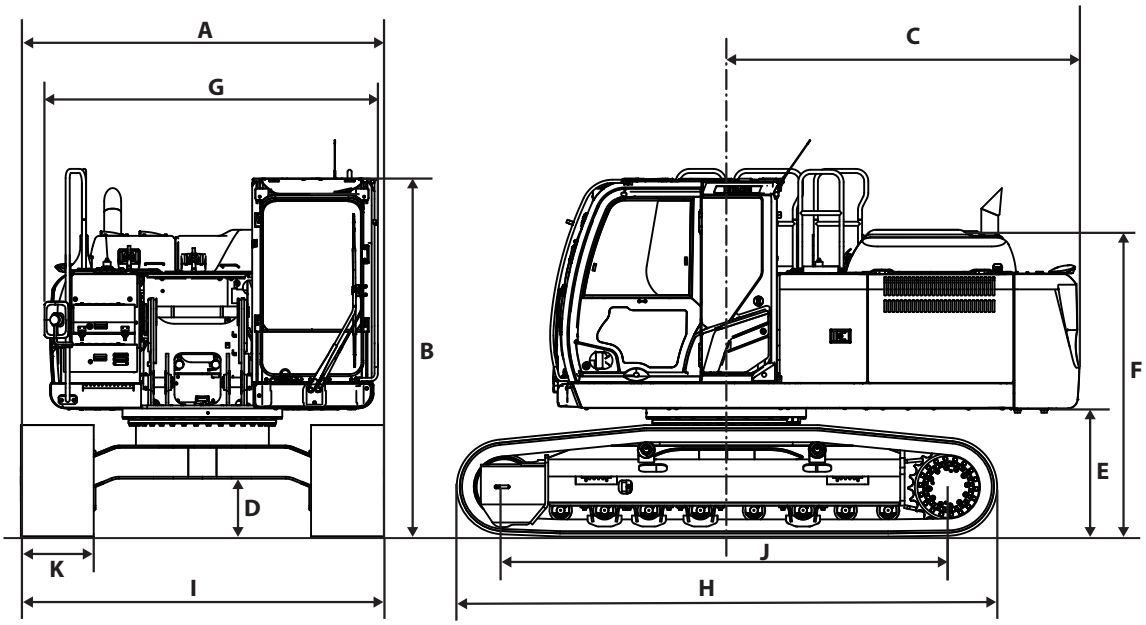

MDFY-12-013-1 ja

			ZX210LC-7
A:	Overall Width (Excluding back mirrors)	mm	2990
B:	Cab Height	mm	2950
C:	Rear End Swing Radius	mm	2910
D:	Minimum Ground Clearance	mm	450*1
E:	Counterweight Clearance	mm	990*1
F:	Engine Cover Height	mm	2500*1
G:	Overall Width of Upperstructure	mm	2700
H:	Undercarriage Length	mm	4450
I:	Undercarriage Width	mm	2990
J:	Sprocket Center to Idler Center	mm	3660
K:	Track Shoe Width	mm	600 (Grouser shoe)

*1 The dimensions do not include the height of the shoe lug.

Dimensions ZX210LCN-7, 240N-7

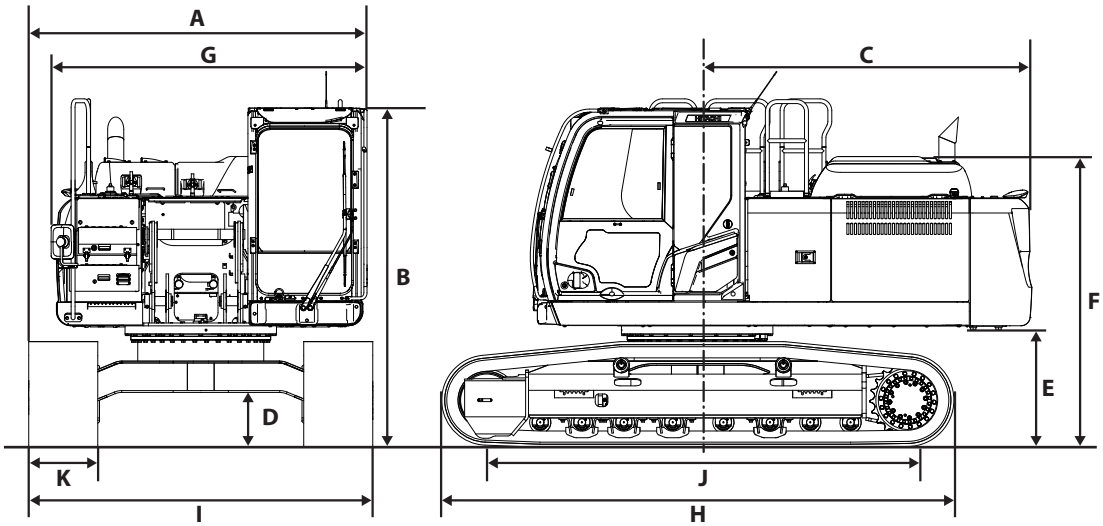

MDFY-12-007-1 ja

			ZX210LCN-7	ZX240N-7
A:	Overall Width (Excluding back mirrors)	mm	2500	
B:	Cab Height	mm	2950	
C:	Rear End Swing Radius	mm	2890	
D:	Minimum Ground Clearance	mm	450*	
E:	Counterweight Clearance	mm	980*	
F:	Engine Cover Height	mm	2500*	
G:	Overall Width of Upperstructure	mm	2480	
H:	Undercarriage Length	mm	4450	4260
I:	Undercarriage Width	mm	2480	
J:	Sprocket Center to Idler Center	mm	3660	3460
K:	Track Shoe Width	mm	500 (Grouser shoe)	550 (Grouser shoe)

*1 The dimensions do not include the height of the shoe lug.

Working Ranges ZX200-7 class

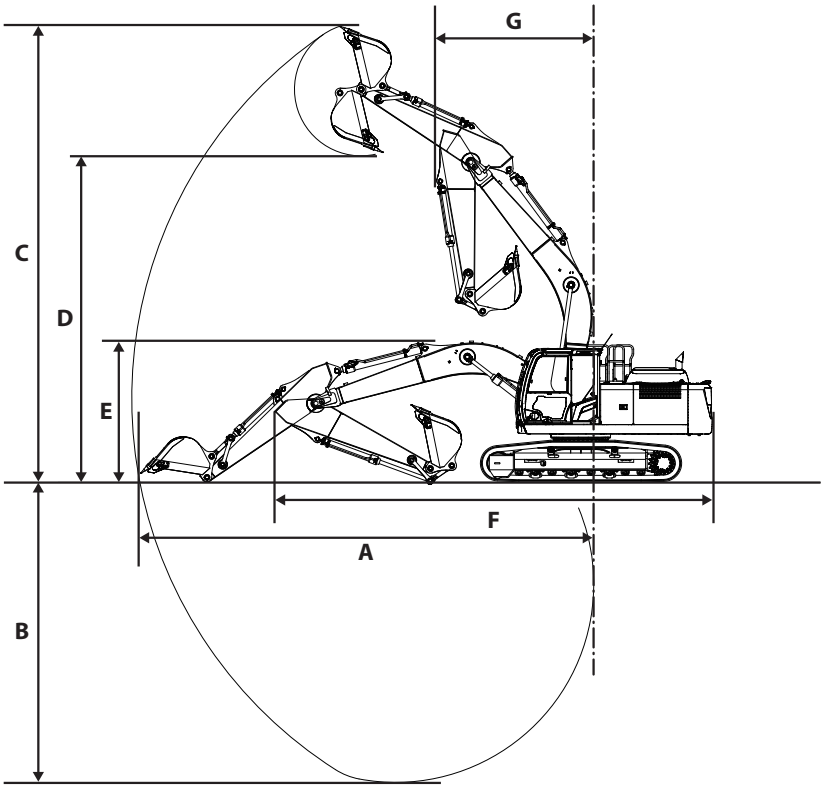

MDFY-12-008-1 ja

Item \ Category	ZX210LC-7	ZX210LCN-7, 240N-7	ZX210LC-7	ZX210LCN-7, 240N-7
	2.42m Arm		2.91m Arm	
	Backhoe		Backhoe	
	mm		mm	
A: Maximum Digging Reach	9430		9920	
B: Maximum Digging Depth	6180*1		6670*1	
C: Maximum Cutting Height	9670*1		10040*1	
D: Maximum Dumping Height	6830*1		7180*1	
E: Overall Height	3200		3030	
F: Overall Length	9770	9740	9670	9650
G: Minimum Swing Radius	3280		3180	

*1 The dimensions do not include the height of the shoe lug.

Shoe Types and Applications ZX210LC-7

Shoe Width		600 mm Grouser Shoe	700 mm Grouser Shoe	800 mm Grouser Shoe	900 mm Grouser Shoe	600 mm Pad Crawler Shoe
Application		For Ordinary Ground (Standard)	For Weak Footing (Option)	For Weak Footing (Option)	For Weak Footing (Option)	For Paved Road (Option)
Operating Weight	kg	22600	22800	23100	23400	22800
Base Machine Weight	kg	17900	18100	18400	18700	18100
Counterweight Weight	kg	4850	4850	4850	4850	4850
Cab Height	mm	2950	2950	2950	2950	3030
Minimum Ground Clearance	mm	450*1	450*1	450*1	450*1	530
Undercarriage Length	mm	4450	4450	4450	4450	4570
Undercarriage Width	mm	2990	3090	3190	3290	2990
Ground Pressure	kPa	47	41	36	32	47

*1 The dimensions do not include the height of the shoe lug.

NOTE

- *The Specifications for the front-end attachment is for 2.91 m arm with PCSA 0.8 m^3 bucket.*
- *700, 800, 900 mm grouser shoe and 600 mm pad crawler shoe, should not be used on gravel or rocky ground.*

Shoe Types and Applications ZX210LCN-7

Shoe Width		500 mm Grouser Shoe	600 mm Grouser Shoe
Application		For Ordinary Ground (Standard)	For Weak Footing (Option)
Operating Weight	kg	22000	22300
Base Machine Weight	kg	17400	17700
Counterweight Weight	kg	4700	4700
Cab Height	mm	2950	2950
Minimum Ground Clearance	mm	450*1	450*1
Undercarriage Length	mm	4450	4450
Undercarriage Width	mm	2480	2580
Ground Pressure	kPa	55	46

*1 The dimensions do not include the height of the shoe lug.

NOTE

- *The Specifications for the front-end attachment is for 2.91 m arm with PCSA 0.8 m^3 bucket.*
- *600 mm grouser shoe, should not be used on gravel or rocky ground.*

Shoe Types and Applications ZX240N-7

Shoe Width		550 mm Grouser Shoe
Application		For Ordinary Ground (Standard)
Operating Weight	kg	22800
Base Machine Weight	kg	18300
Counterweight Weight	kg	4700
Cab Height	mm	2950
Minimum Ground Clearance	mm	450*1
Undercarriage Length	mm	4260
Undercarriage Width	mm	2480
Ground Pressure	kPa	54

*1 The dimensions do not include the height of the shoe lug.

NOTE

- *The Specifications for the front-end attachment is for 2.91 m arm with PCSA 0.8 m^3 bucket.*

Bucket Types and Applications ZX200-7 class

Bucket	Bucket Capacity (m^3)	Bucket Width (mm)		ZX210LC-7		ZX210LCN-7		ZX240N-7	
	ISO7451:2007 (Heaped)	With side cutter	Without side cutter	5.68	5.68	5.68	5.68	5.68	5.68
				2.42	2.91	2.42	2.91	2.42	2.91
Hoe Bucket	0.51	830	720	⦿	⦿	⦿	⦿	⦿	⦿
	0.80	1140	1030	⦿	⦿	⦿	⦿	⦿	⦿
	0.91	1260	1150	⦿	⦿	⦿	○	⦿	⦿
	1.10	1440	1330	○	○	□	-	□	○
	1.20	-	1450	□	×	□	-	□	-
Reinforced Bucket	0.80	1140	1030	⦿	⦿	⦿	⦿	⦿	⦿
	0.91	1260	1150	⦿	⦿	⦿	○	⦿	⦿
H Bucket	0.80	1150	1040	⦿	⦿	⦿	⦿	⦿	⦿
H Bucket (Transverse-Type-Pin)	0.80	1150	1040	⦿	⦿	⦿	⦿	⦿	⦿
Ripper Bucket	0.60	800		△	×	△	×	△	×
One Point Ripper	-	-		△	×	△	×	△	×
Slope finishing bucket	-	-		◇	◇	◇	◇	◇	◇
V-Type Bucket	0.40	1100X1800		○	○	○	○	○	○

NOTE

- *Symbols in the above table have the following meanings.*

  ⦿ : *General excavating*

  ○ : *Light duty excavating*

  △ : *Rock digging*

  □ : *Loading work*

  ◇ : *Slope-finishing work*

  × : *Not applicable (not warrantable)*

- *Hoe bucket is applicable to the following types of work.*
  General excavating:
  For digging and loading operation of sand, gravel, clay, ordinary earth and so on.
  Light duty excavating:
  For digging and loading operation of dry, loosened earth, sand, mud and so on.
  Their bulk density shall be less than 1.60 t/m^3 (2700 lb/yd^3) as a standard.
  Loading:
  For loading operation of dry, loosened earth and sand.
  Their bulk density shall be less than 1.10 t/m^3 (1850 lb/yd^3) as a standard.
  Rock digging:
  For digging/loading operation of mountain gravels, blasted rock, hard clay, soft rock and so on.

IMPORTANT

Using inapplicable buckets may cause serious damage to the front structure such as boom, arm and hydraulic cylinders.

Specifications ZX250LC-7, 250LCN-7

		ZX250LC-7	ZX250LCN-7
Type of Front-End Attachment	-	2.96 m Arm	
Bucket Capacity (Heaped)	m^3	ISO7451:2007 1.0	
Counterweight Weight	kg	6200	
Operating Weight	kg	26500	26400
Base Machine Weight	kg	20600	20500
Engine Type	-	Isuzu 4HK1	
Engine Power	kW/min^{-1}	ISO 14396: 140/2000	
		ISO 9249: 132/2000	
Ground Pressure	kPa	52.5	52.3
Swing Speed	min^{-1}	10.7	
Travel Speed (fast/slow)	km/h	5.5/3.4	
Gradeability	°(tanθ)	35 (0.70)	

Dimensions ZX250LC-7, 250LCN-7

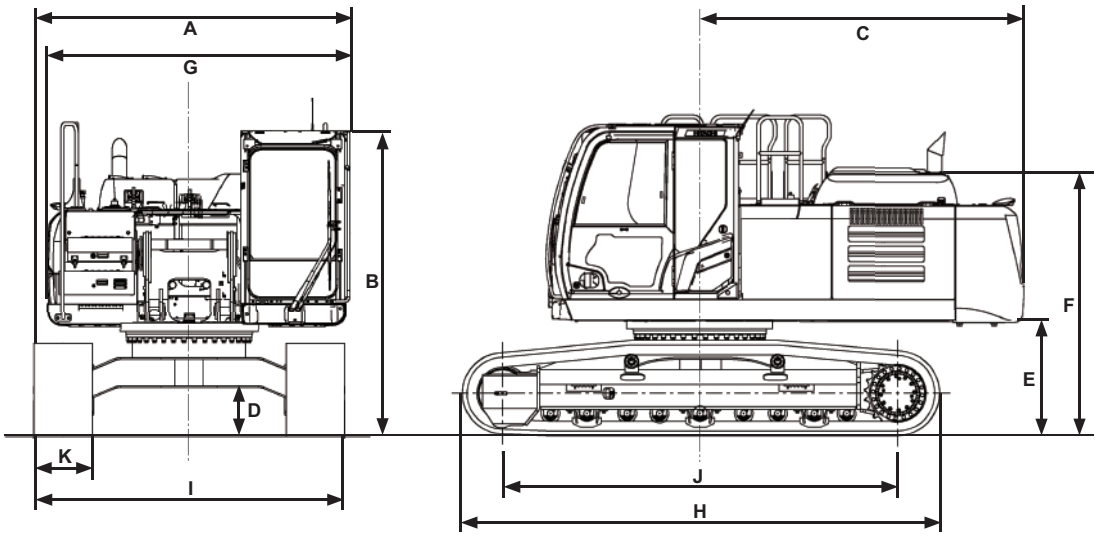

MDFY-12-005-1 ja

			ZX250LC-7	ZX250LCN-7
A:	Overall Width (Excluding back mirrors)	mm	3190	2990
B:	Cab Height	mm	3010	
C:	Rear End Swing Radius	mm	3140	
D:	Minimum Ground Clearance	mm	460*1	
E:	Counterweight Clearance	mm	1050*1	
F:	Engine Cover Height	mm	2570*1	
G:	Overall Width of Upperstructure	mm	2870	
H:	Undercarriage Length	mm	4640	
I:	Undercarriage Width	mm	3190	2990
J:	Sprocket Center to Idler Center	mm	3850	
K:	Track Shoe Width	mm	600 (Grouser shoe)	

*1The dimensions do not include the height of the shoe lug.

Working Ranges ZX250LC-7, 250LCN-7

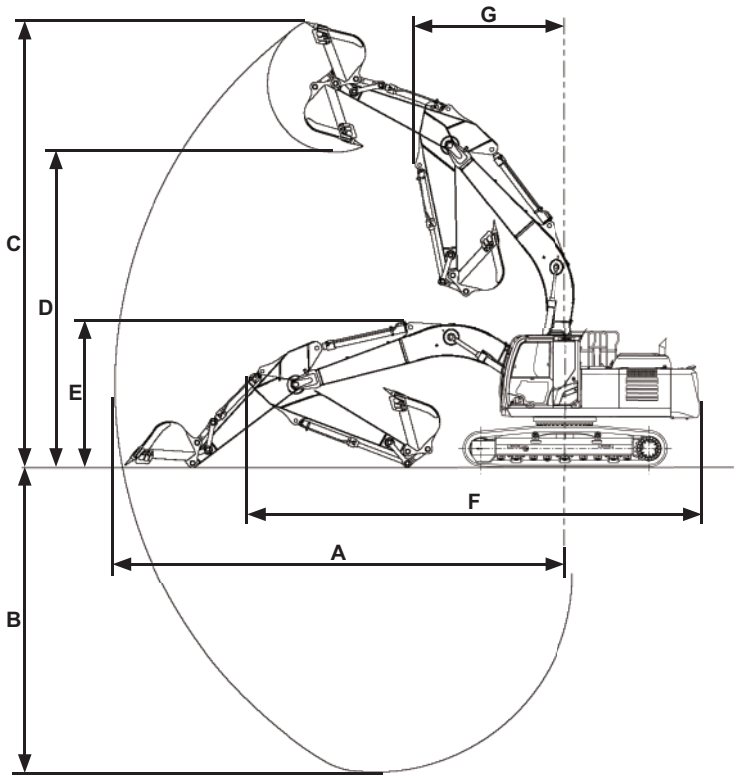

MDFY-12-006-1 ja

Item \ Category	2.50 m Arm	2.96 m Arm
	Backhoe	Backhoe
	mm	mm
A: Maximum Digging Reach	9880	10290
B: Maximum Digging Depth	6500*1	6960*1
C: Maximum Cutting Height	9950*1	10160*1
D: Maximum Dumping Height	6990*1	7200*1
E: Overall Height	3390	3110
F: Overall Length	10470	10350
G: Minimum Swing Radius	3480	3440

*1 The dimensions do not include the height of the shoe lug.

Shoe Types and Applications ZX250LC-7

Shoe Width		600 mm Grouser Shoe	700 mm Grouser Shoe	800 mm Grouser Shoe	900 mm Grouser Shoe
Application		For Ordinary Ground	For Weak Footing	For Weak Footing	For Weak Footing
Operating Weight	kg	26500	26900	27200	27700
Base Machine Weight	kg	20600	21000	21300	21800
Counterweight Weight	kg	6200	6200	6200	6200
Cab Height	mm	3010	3010	3010	3010
Minimum Ground Clearance	mm	460*1	460*1	460*1	460*1
Undercarriage Length	mm	4640	4640	4640	4640
Undercarriage Width	mm	3190	3290	3390	3490
Ground Pressure	kPa	52.5	45.7	40.4	36.6

*1 The dimensions do not include the height of the shoe lug.

NOTE

- *The Specifications for the front-end attachment is for 2.96 m arm with PCSA 1.0 m^3 bucket.*
- *700, 800, 900 mm grouser shoe, should not be used on gravel or rocky ground.*

Shoe Types and Applications ZX250LCN-7

Shoe Width		600 mm Grouser Shoe	700 mm Grouser Shoe	800 mm Grouser Shoe	900 mm Grouser Shoe
Application		For Ordinary Ground	For Weak Footing	For Weak Footing	For Weak Footing
Operating Weight	kg	26400	26600	27100	27600
Base Machine Weight	kg	20500	21000	21200	21700
Counterweight Weight	kg	6200	6200	6200	6200
Cab Height	mm	3010	3010	3010	3010
Minimum Ground Clearance	mm	460*1	460*1	460*1	460*1
Undercarriage Length	mm	4640	4640	4640	4640
Undercarriage Width	mm	2990	3090	3190	3290
Ground Pressure	kPa	52.3	45.6	40.3	36.5

*1 The dimensions do not include the height of the shoe lug.

NOTE

- *The Specifications for the front-end attachment is for 2.96 m arm with PCSA 1.0 m^3 bucket.*
- *700, 800, 900 mm grouser shoe, should not be used on gravel or rocky ground.*

Bucket Types and Applications ZX250LC-7, 250LCN-7

Bucket	Bucket Capacity (m^3)	Bucket Width (mm)		Front-End Attachment	
	ISO7451:2007 (Heaped)	With side cutter	Without side cutter	2.50 m Arm	2.96 m Arm
Hoe Bucket	0.80	1080	950	⦿	⦿
	1.00	1260	1130	⦿	⦿
	1.10	1350	1220	○	○
	1.25	1490	1360	○	○
	1.40	1630	1500	□	×
Bucket reinforcement can be welded in four places upon customer' s request	1.00	1260	1130	⦿	⦿
	1.10	1350	1140	○	○
Reinforced Hoe Bucket (HD Type)	1.00	1270	1140	⦿	⦿
Reinforced Hoe Bucket HD Type (Transverse-Type-Pin-Used Type)	1.00	1270	1220	⦿	⦿
Rock Bucket	0.92	1180	1130	△	△
Ripper Bucket	0.80	1000 (Without side cutter)	1000	△	△
One Point Ripper	-	-		△	△

NOTE

- *Symbols in the above table have the following meanings.*

  ⦿ : *General excavating*

  ○ : *Light duty excavating*

  △ : *Rock digging*

  □ : *Loading work*

  ◇ : *Slope-finishing work*

  × : *Not applicable (not warrantable)*

- *Hoe bucket is applicable to the following types of work.*
  General excavating:
  For digging and loading operation of sand, gravel, clay, ordinary earth and so on.
  Light duty excavating:
  For digging and loading operation of dry, loosened earth, sand, mud and so on.
  Their bulk density shall be less than 1.60 t/m^3 (2700 lb/yd^3) as a standard.
  Loading:
  For loading operation of dry, loosened earth and sand.
  Their bulk density shall be less than 1.10 t/m^3 (1850 lb/yd^3) as a standard.
  Rock digging:
  For digging/loading operation of mountain gravels, blasted rock, hard clay, soft rock and so on.

IMPORTANT

Using inapplicable buckets may cause serious damage to the front structure such as boom, arm and hydraulic cylinders.

Specifications ZX300LC-7, 300LCN-7

		ZX300LC-7	ZX300LCN-7
Type of Front-End Attachment	-	3.11 m Arm	
Bucket Capacity (Heaped)	m^3	ISO7451:2007 1.25	
Counterweight Weight	kg	5600	
Operating Weight	kg	30400	30300
Base Machine Weight	kg	23900	23700
Engine Type	-	Isuzu 6HK1	
Engine Power	kW/min^{-1}	ISO 14396: 197/1900	
		ISO 9249: 186/1900	
Ground Pressure	kPa	56.9	56.6
Swing Speed	min^{-1}	10.3	
Travel Speed (fast/slow)	km/h	5.2/3.1	
Gradeability	°(tanθ)	35 (0.70)	

Dimensions ZX300LC-7, 300LCN-7

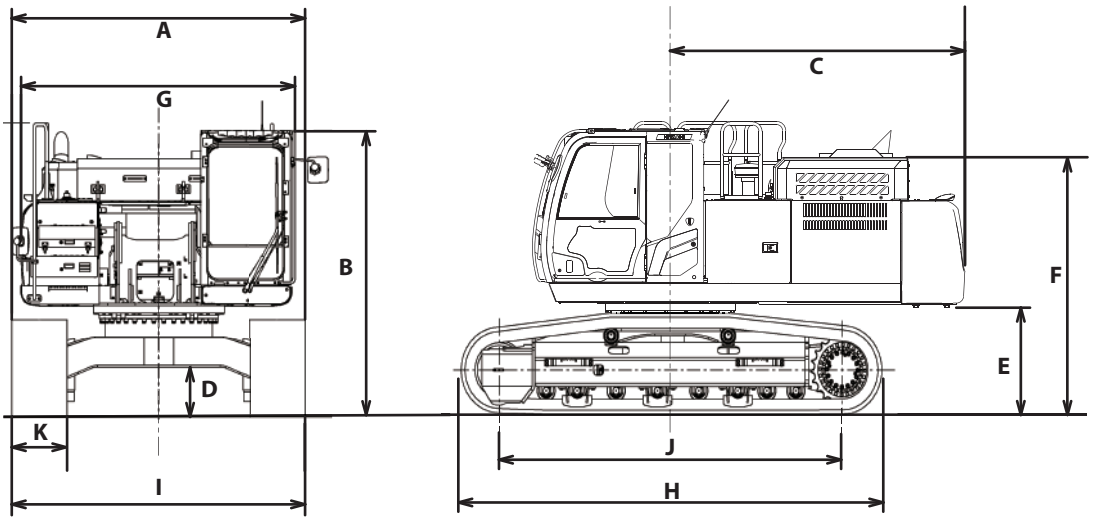

MDFY-12-002-1 ja

			ZX300LC-7	ZX300LCN-7
A:	Overall Width (Excluding back mirrors)	mm	3190	2990
B:	Cab Height	mm	3120	
C:	Rear End Swing Radius	mm	3250	
D:	Minimum Ground Clearance	mm	510*1	
E:	Counterweight Clearance	mm	1130*1	
F:	Engine Cover Height	mm	2720*1	
G:	Overall Width of Upperstructure	mm	2990	
H:	Undercarriage Length	mm	4970	
I:	Undercarriage Width	mm	3190	2990
J:	Sprocket Center to Idler Center	mm	4050	
K:	Track Shoe Width	mm	600 (Grouser shoe)	

*1The dimensions do not include the height of the shoe lug.

Working Ranges ZX300LC-7, 300LCN-7

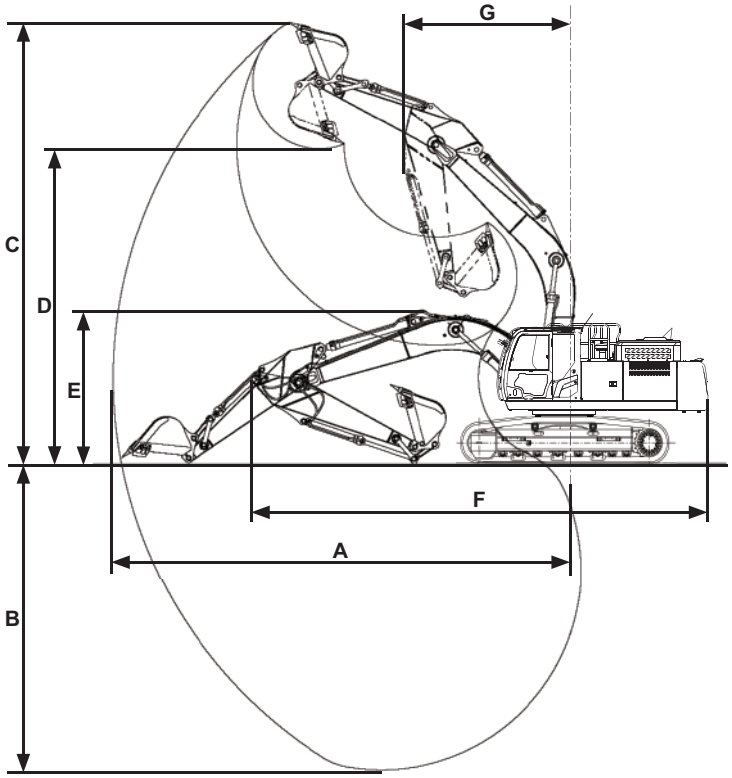

MDFY-12-003-1 ja

Category / Item	2.42 m Arm	3.11 m Arm
	Backhoe	Backhoe
	mm	mm
A : Maximum Digging Reach	10060	10710
B : Maximum Digging Depth	6530*1	7220*1
C : Maximum Cutting Height	9910*1	10280*1
D : Maximum Dumping Height	6980*1	7330*1
E : Overall Height	3470	3240
F : Overall Length	10710	10610
G : Minimum Swing Radius	4060	3900

*1 The dimensions do not include the height of the shoe lug.

Shoe Types and Applications ZX300LC-7

Shoe Width		600 mm Grouser Shoe	700 mm Grouser Shoe	800 mm Grouser Shoe	900 mm Grouser Shoe
Application		For Ordinary Ground	For Weak Footing	For Weak Footing	For Weak Footing
Operating Weight	kg	30400	30800	31200	31600
Base Machine Weight	kg	23400	24200	24600	25000
Counterweight Weight	kg	5600	5600	5600	5600
Cab Height	mm	3120	3120	3120	3120
Minimum Ground Clearance	mm	510*1	510*1	510*1	510*1
Undercarriage Length	mm	4970	4970	4970	4970
Undercarriage Width	mm	3190	3290	3390	3490
Ground Pressure	kPa	56.9	49.4	43.7	39.4

*1 The dimensions do not include the height of the shoe lug.

NOTE

- *The Specifications for the front-end attachment is for 3.11 m arm with PCSA 1.25 m^3 bucket.*
- *700, 800, 900 mm grouser shoe should not be used on gravel or rocky ground.*

Shoe Types and Applications ZX300LCN-7

Shoe Width		600 mm Grouser Shoe	700 mm Grouser Shoe
Application		For Ordinary Ground	For Weak Footing
Operating Weight	kg	30400	30700
Base Machine Weight	kg	23700	24100
Counterweight Weight	kg	5600	5600
Cab Height	mm	3120	3120
Minimum Ground Clearance	mm	510*1	510*1
Undercarriage Length	mm	4970	4970
Undercarriage Width	mm	2990	3090
Ground Pressure	kPa	56.6	49.1

*1 The dimensions do not include the height of the shoe lug.

NOTE

- *The Specifications for the front-end attachment is for 3.11 m arm with PCSA 1.25 m^3 bucket.*
- *700 mm grouser shoe should not be used on gravel or rocky ground.*

Bucket Types and Applications ZX300LC-7, 300LCN-7

Bucket	Bucket Capacity m^3 (yd^3)	Bucket Width (mm)		Front-End Attachment	
	ISO7451:2007 (Heaped)	With side cutters	Without side cutters	2.42 m Arm	3.11 m Arm
Hoe Bucket	1.00	1260	1130	⦿	⦿
	1.25	1490	1360	⦿	⦿
	1.40	1630	1500	⦿	⦿
	1.62	1830	1700	□	×
Bucket reinforcement can be welded in four places upon customer' s request	1.10	1350	1220	⦿	⦿
	1.40	1630	1500	○	○
Rock Bucket	0.92	1180	1130	△	△
Ripper Bucket	0.80	-	1000	△	△
One Point Ripper	-	-		△	△

- Symbols in the above table have the following meanings.

NOTE

⦿ : *General excavating*
○ : *Light duty excavating*
△ : *Rock digging*
□ : *Loading work*
◇ : *Slope-finishing work*
× : *Not applicable (not warrantable)*

- Hoe bucket is applicable to the following types of work.
  General excavating:
  For digging and loading operation of sand, gravel, clay, ordinary earth and so on.
  Light duty excavating:
  For digging and loading operation of dry, loosened earth, sand, mud and so on.
  Their bulk density shall be less than 1.60 t/m^3 (2700 lb/yd^3) as a standard.
  Loading:
  For loading operation of dry, loosened earth and sand.
  Their bulk density shall be less than 1.10 t/m^3 (1850 lb/yd^3) as a standard.
  Rock digging:
  For digging/loading operation of mountain gravels, blasted rock, hard clay, soft rock and so on.

IMPORTANT

Using inapplicable buckets may cause serious damage to the front structure such as boom, arm and hydraulic cylinders.

Specifications ZX350LC-7, 350LCN-7

		ZX350LC-7	ZX350LCN-7
Type of Front-End Attachment	-	3.20 m Arm	
Bucket Capacity (Heaped)	m^3	ISO7451:2007 1.4	
Counterweight Weight	kg	7600	
Operating Weight	kg	35400	35300
Base Machine Weight	kg	27300	27200
Engine Type	-	Isuzu 6HK1	
Engine Power	kW/min^{-1}	ISO 14396: 210/1900	
		ISO 9249: 202/1900	
Ground Pressure	kPa	66.2	66.0
Swing Speed	min^{-1}	9.7	
Travel Speed (fast/slow)	km/h	5.0/3.2	
Gradeability	°(tanθ)	35 (0.70)	

Dimensions ZX350LC-7, 350LCN-7

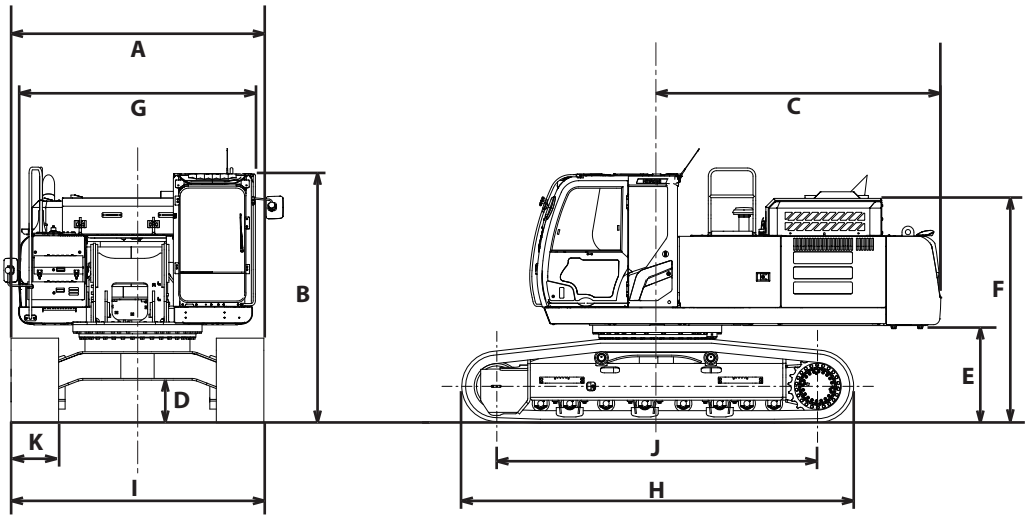

MDFY-12-001-1 ja

			ZX350LC-7	ZX350LCN-7
A:	Overall Width (Excluding back mirrors)	mm	3190	2990
B:	Cab Height	mm	3150	
C:	Rear End Swing Radius	mm	3600	
D:	Minimum Ground Clearance	mm	500*1	
E:	Counterweight Clearance	mm	1160*1	
F:	Engine Cover Height	mm	2880*1	
G:	Overall Width of Upperstructure	mm	2990	
H:	Undercarriage Length	mm	4970	
I:	Undercarriage Width	mm	3190	2990
J:	Sprocket Center to Idler Center	mm	4050	
K:	Track Shoe Width	mm	600 (Grouser shoe)	

*1 The dimensions do not include the height of the shoe lug.

Working Ranges ZX350LC-7, 350LCN-7

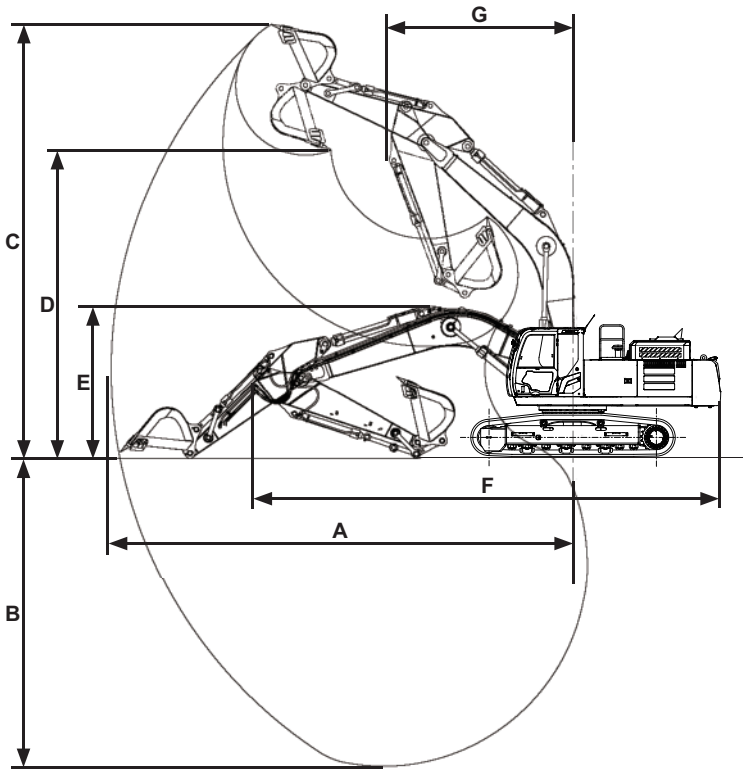

MDFY-12-004-1 ja

Item \ Category	2.67 m Arm Backhoe mm	3.2 m Arm Backhoe mm
A : Maximum Digging Reach	10570	11100
B : Maximum Digging Depth	6840*1	7380*1
C : Maximum Cutting Height	9990*1	10350*1
D : Maximum Dumping Height	6940*1	7240*1
E : Overall Height	3520	3320
F : Overall Length	11350	11210
G : Minimum Swing Radius	4610	4460

*1 The dimensions do not include the height of the shoe lug.

Shoe Types and Applications ZX350LC-7

Shoe Width		600 mm Grouser Shoe	700 mm Grouser Shoe	800 mm Grouser Shoe	900 mm Grouser Shoe	600 mm Double Grouser Shoe
Application		For Ordinary Ground	For Weak Footing	For Weak Footing	For Weak Footing	For Ordinary Ground
Operating Weight	kg	35400	35800	36200	36500	36000
Base Machine Weight	kg	27300	27700	28100	28400	27900
Counterweight Weight	kg	7600	7600	7600	7600	7600
Cab Height	mm	3150	3150	3150	3150	3150
Minimum Ground Clearance	mm	500*1	500*1	500*1	500*1	500*1
Undercarriage Length	mm	4970	4970	4970	4970	4970
Undercarriage Width	mm	3190	3290	3390	3490	3190
Ground Pressure	kPa	66.2	57.3	50.7	45.5	67.2

*1 The dimensions do not include the height of the shoe lug.

NOTE

- *The Specifications for the front-end attachment is for 3.2 m arm with PCSA 1.4 m^3 bucket.*
- *700, 800, 900 mm grouser shoe should not be used on gravel or rocky ground.*

Shoe Types and Applications ZX350LCN-7

Shoe Width		600 mm Grouser Shoe	700 mm Grouser Shoe	600 mm Double Grouser Shoe
Application		For Ordinary Ground	For Weak Footing	For Ordinary Ground
Operating Weight	kg	35300	35700	35900
Base Machine Weight	kg	27200	27600	27800
Counterweight Weight	kg	7600	7600	7600
Cab Height	mm	3150	3150	3150
Minimum Ground Clearance	mm	500*1	500*1	500*1
Undercarriage Length	mm	4970	4970	4970
Undercarriage Width	mm	2990	3090	2990
Ground Pressure	kPa	66.0	57.2	67.0

*1 The dimensions do not include the height of the shoe lug.

NOTE

- *The Specifications for the front-end attachment is for 3.2 m arm with PCSA 1.4 m^3 bucket.*
- *700 mm grouser shoe should not be used on gravel or rocky ground.*

Bucket Types and Applications ZX350LC-7, 350LCN-7

Bucket	Bucket Capacity m^3	Bucket Width mm		Front-End Attachment	
	ISO7451:2007 (Heaped)	With side cutter	Without side cutter	2.67 m Arm	3.2 m Arm
Hoe Bucket	1.15	1230	1100	⦿	⦿
	1.40	1410	1280	⦿	⦿
	1.62	1590	1460	○	○
	1.86	-	1640	□	×
(Super V)	1.40	1410	1280	⦿	⦿
Reinforced Bucket	1.40	1410	1280	⦿	⦿
	1.62	1590	1460	○	○
Rock Bucket	1.15	1200	1130	△	△
(Super V)	1.38	1360	1310	△	△
(Transverse-Type-Pin)	1.38	1360	1270	△	△
(Super V)	1.50	1470	1420	△	△
(Transverse-Type-Pin)	1.50	1470	1380	△	△
Ripper Bucket	0.90	–	1010	△	△
One Point Ripper	–	–	–	△	△

NOTE

- *Symbols in the above table have the following meanings.*

  ⦿ : *General excavating*
  ○ : *Light duty excavating*
  △ : *Rock digging*
  □ : *Loading work*
  ◇ : *Slope-finishing work*
  × : *Not applicable (not warrantable)*

- *Hoe bucket is applicable to the following types of work.*
  General excavating:
  For digging and loading operation of sand, gravel, clay, ordinary earth and so on.
  Light duty excavating:
  For digging and loading operation of dry, loosened earth, sand, mud and so on.
  Their bulk density shall be less than 1.60 t/m^3 (2700 lb/yd^3) as a standard.
  Loading:
  For loading operation of dry, loosened earth and sand.
  Their bulk density shall be less than 1.10 t/m^3 (1850 lb/yd^3) as a standard.
  Rock digging:
  For digging/loading operation of mountain gravels, blasted rock, hard clay, soft rock and so on.

IMPORTANT

Using inapplicable buckets may cause serious damage to the front structure such as boom, arm and hydraulic cylinders.

The Value of the Carbon Dioxide (CO_2) emissions

These CO_2 measurement results from testing over a fixed test cycle under laboratory conditions a(n) (parent) engine representative of the engine type (engine family) and shall not imply or express any guarantee of the performance of a particular engine.

ZX130-7

Model	Power category	Family name	Parent engine model	Test cycle	CO2 Value[g/kWh]
ZX130-7	56-130 kW	1KDE	1KDE 001	Hot start NRTC	743.0

ZX160-7、180-7

Model	Power category	Family name	Parent engine model	Test cycle	CO2 Value[g/kWh]
ZX160-7	56-130 kW	YD457DHCSV6A	4TN107FTT-DM	Hot start NRTC	674

ZX200-7

Model	Power category	Family name	Parent engine model	Test cycle	CO2 Value[g/kWh]
ZX200-7	56-130 kW	4HK1XDDV	VD-4HK1XBSA-02	Hot start NRTC	686.7

ZX240-7

Model	Power category	Family name	Parent engine model	Test cycle	CO2 Value[g/kWh]
ZX240-7	130-560 kW	4HK1XDEV	VE-4HK1XBSA-01	Hot start NRTC	702.1

ZX330-7, ZX300-7

Model	Power category	Family name	Parent engine model	Test cycle	CO2 Value[g/kWh]
ZX330-7	130-560 kW	6HK1XDEV	VE-6HK1XBSA-01	Hot start NRTC	679.0
ZX300-7			VE-6HK1XBSA-02		

Link with Hook

When performing lifting work, ensure that the weight of the load being lifted does not exceed the following weight.
Maximum lifting load

ZX120-7 class	: 4000 kg
ZX160-7 class	: 5500 kg
ZX180-7, 200-7 class	: 8000 kg
ZX240-7, 300-7class	: 10000 kg

CAUTION

Precautions for Lifting Work

- **Work on flat ground. Working on a slope is dangerous as the machine may become unstable.**
- **When swinging the machine with a load, be careful not to hit anyone nearby with the load and take care not to allow the centrifugal force to cause the machine to tip over. For this work, adjust the engine speed to slow and swing at a slow rate.**
- **If traveling with the load is unavoidable, adjust the engine speed to slow and drive slowly.**
  In these circumstances, always select slow speed mode with the travel mode switch.
- **Never move the front attachment or swing the upperstructure while traveling. Such operations are dangerous because they make it more likely that the load will sway.**
- **When using the link with the hook, inverting the bucket may result in the wire rope snagging on the leading edge of the bucket. Before using the link with the hook, adjust the bucket to an angle at which it does not snag.**

--- daily inspection

Before conducting any lifting work, check for wear, cracking and deformation in hook (1), for cracking in the attachment part of hook (1) and for damage to rope detachment stopper (2) (latch (3), spring (4), pin (5) and spring pin (6), and perform a check on operating status etc. to ensure nothing is abnormal.

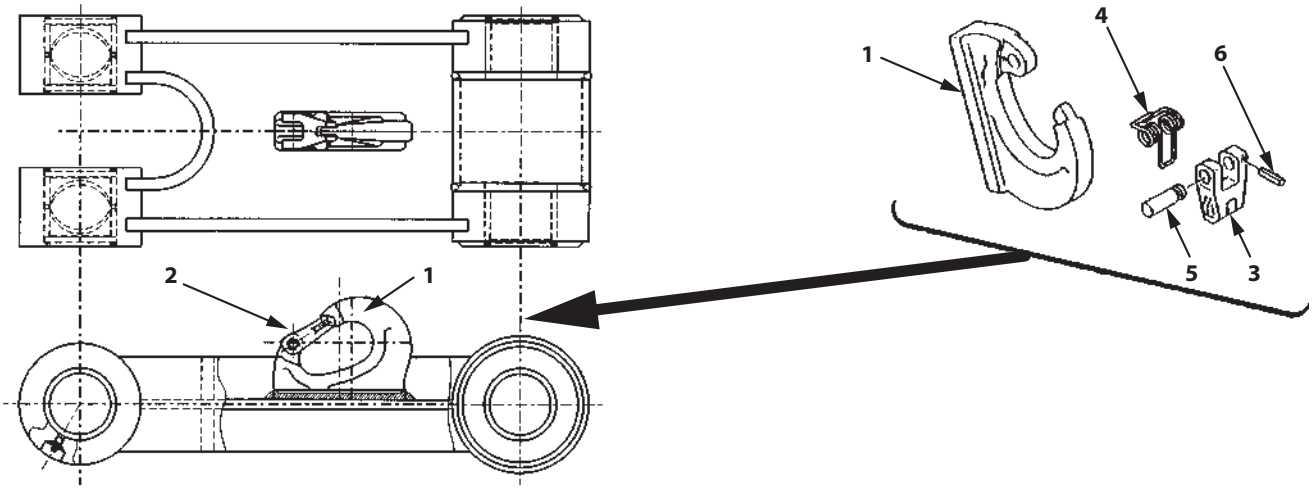

MDFY-13-018-1 ja

Pad Crawler Shoe

Using Pad Crawler Shoe

ZX120-7 class, ZX210LC-7

Pad crawler is a track link on which a rubber pad is installed so the machine does not damage road surfaces when traveling. Be sure to observe all precautions for handling pad crawler. Avoid operating the machine in the following conditions:

Forbidden Operations

Do not operate on sharp, rocky, uneven surfaces, such as river rock, gravel, etc.

Do not allow engine oil, gasoline, etc. to remain on the track, and avoid traveling in oil in order to reduce the danger of slipping.

While raising the machine using the front attachment do not allow the other side track to drive, possibly causing personal injury, damaging or displacing pad crawler.

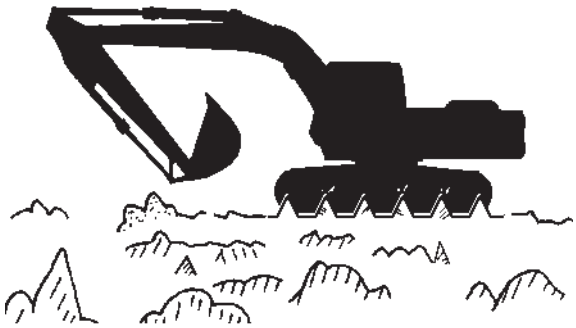

M107-05-051 ja

Traveling and Other Cautions

Do not keep the pad crawler shoe under direct sunlight for more than three months.

Avoid reckless steering operations on concrete road to the extent possible, as this will cause wear to the shoe lug. Also, avoid running on asphalt road of more than 60 °C (140 °F) in temperature, as this will cause wear to the shoe as well as damage to the road surface.

Ease the machine down from the jacked-up position. Do not let it drop.

Pad crawler has large friction force. Therefore to avoid damaging the pad crawler slowly operate the control levers to gradually turn the machine.

After raising one side track with the front attachment, slowly lower the pad crawler equipped machine.

If the pad crawler becomes severely damaged, contact your nearest Hitachi Dealer for replacement.

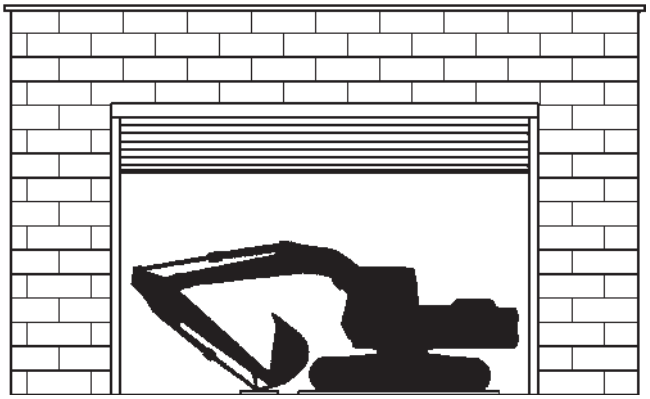

M107-05-052 ja

Transporting

Transporting

CAUTION

Fasten chains or cables to the machine frame. Do not place chains or cables over or against the hydraulic lines or hoses.

1. Place blocks in front of and behind the tracks.
2. Fasten each corner of the machine and front attachment to the trailer with a chain or cable.

M107-06-013 ja

Precautions for Transporting Machines with Pad Crawler Shoes

When transporting a machine with pad crawler shoes, be sure to fasten the right and left track frames securely to the flatbed with wire ropes and soft protectors, as shown. Do not allow wire ropes to come into direct contact with pad crawler shoes.

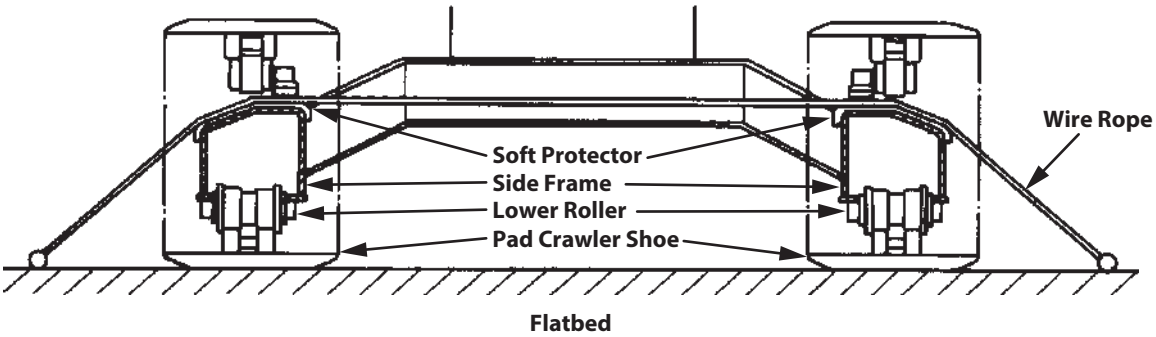

M102-06-004-1 en_GB

--- every 50 hours

If the amount of sag is inappropriate, the tracks may flap around or come off. This in turn may damage the track itself and other parts.
As this impacts the life of the machine, adjust the sag of the tracks to a suitable amount.
To measure or adjust the tracks, park the machine on firm, level ground.

Procedure for Measuring Raised Tracks

1. Raise a track as illustrated at right to measure its sag, and support it securely with blocks or the like.

   CAUTION

   Take care that no hands, feet, or other body parts are put beneath the track.

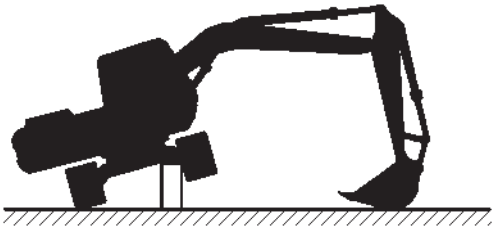

M104-07-067 ja

2. Remove any deposits on mating parts of the tracks and undercarriage (top/bottom rollers, idler, sprockets).

   IMPORTANT

   Accurate measurements cannot be taken if there are deposits on mating parts of the tracks and undercarriage (top/bottom rollers, idler, sprockets).

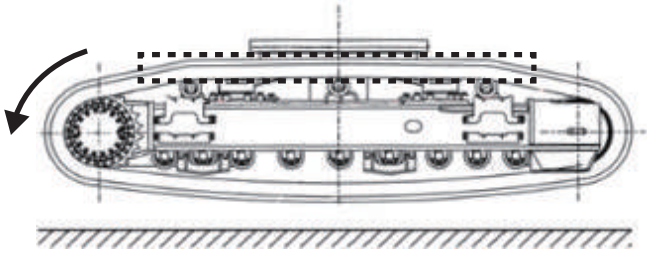

MDFY-07-149-1 ja

3. Rotate the track in reverse to eliminate track looseness on the upper side of the side frame.
4. As illustrated at right, take measurements midway (A) between the reduction gear and the idler (bottom of side frame to top of shoe).

   Track sag specifications

Model	A (mm)
ZX120-7 class	250 to 280
ZX210LC-7	300 to 335

   If track sag is not within specifications, loosen or tighten the track.

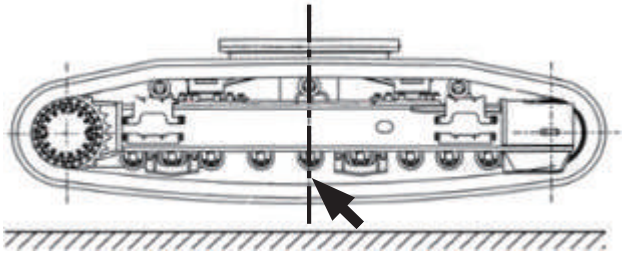

MDFY-07-149-2 ja

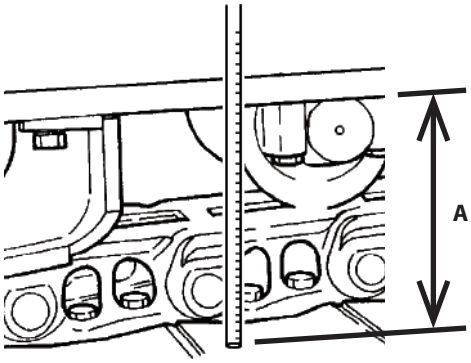

MDFY-07-150-1 ja

Adjust Track Sag

1. Adjust the tracks one at a time, with the track in the air. When doing so, be sure to place blocks under the machine frame to support the machine.
2. After adjusting the sag on both track, rotate the tracks backward and forward to equalize the sag on both sides.
3. Recheck the track sag one more time. Readjust as necessary.

If raising a track to measure it is not possible, measure it via the “Simple Procedure” described below. However, we recommend using the “Measurement Procedure with Track Raised”. This is because the accuracy of sag adjustments made using “Simple Procedure” measurements are not as accurate as via the “Measurement Procedure with Track Raised”.

Simple Maintenance Procedure

1. Remove any deposits on mating parts of the tracks and undercarriage (top/bottom rollers, idler, sprockets).

IMPORTANT

Accurate measurements cannot be taken if there are deposits on mating parts of the tracks and undercarriage (top/bottom rollers, idler, sprockets).

2. Move forward in the direction of idler (1), traveling a distance equivalent to at least the length of ground contact by the machine.
3. Stop the machine in a state where one of the track pins (4) is directly over upper roller (2).
4. As shown in the illustration to the right, place the straight rod (3) (squared timber etc.) on the section of track between idler (1) and upper roller (2).
5. Measure the maximum sag between the upper surface of the track and the bottom surface of the rod. (Dimension B in the illustration)

Model	Correct Amount of Sag B (mm)
ZX120-7 class	20 to 40
ZX210LCN-7	15 to 35

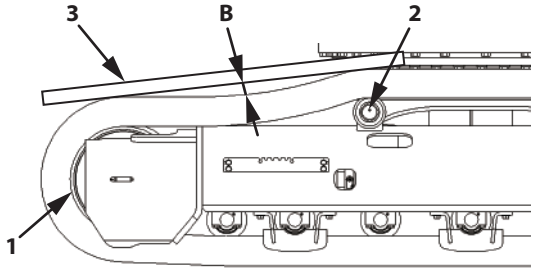

MDFY-07-100-1 ja

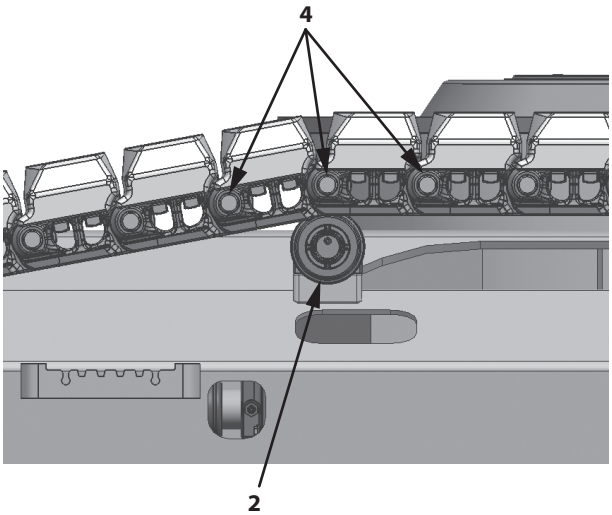

MDFY-13-022-1 ja

Loosening the Track

1. Use a 24 mm hex socket on the body of valve (1) and loosen the entire valve a little at a time; when grease is expelled, the track loosens.

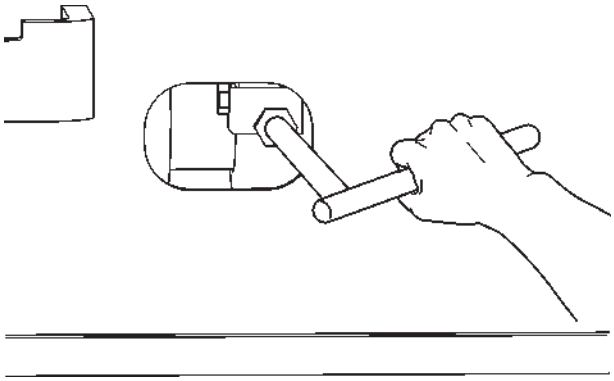

MDAA-07-013 ja

CAUTION

- **The pressure inside the cylinder of the track adjuster is high. Do not loosen valve (1) quickly or loosen it too much as valve (1) may fly off or high-pressure grease in the adjusting cylinder may spout out. Slowly loosen valve (1) while keeping body parts and face away from valve. Never loosen grease fitting (2).**
- **Take care that no hands, feet, or other body parts are beneath the track.**

IMPORTANT

When gravel is stuck in the sprocket, remove it before loosening the track.

2. Between 1 to 1.5 turns of valve (1) are sufficient to loosen the track. When valve (1) comes in contact with stop plate (3), do not loosen the valve further. When valve (1) is loosened, grease is expelled from part A.
3. If grease is not expelled readily, raise the track to be loosened off the ground and rotate the track slightly.
4. When proper track sag is obtained, turn valve (1) clockwise to the original state.
   Tightening Torque: 90 N·m (9 kgf·m)

   Do not remove valve stop plate (3). Do not loosen bolt (4) while adjusting the track sag.

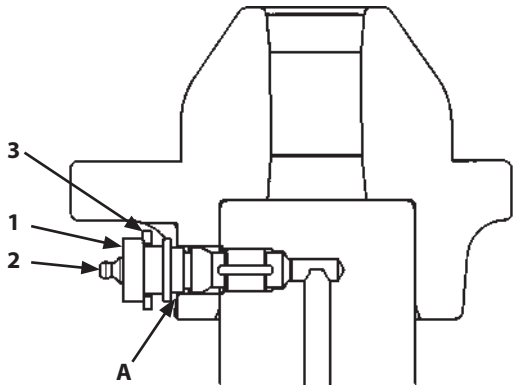

MDAA-07-014-2 ja

CAUTION

If grease is not expelled properly, contact your authorized dealer.

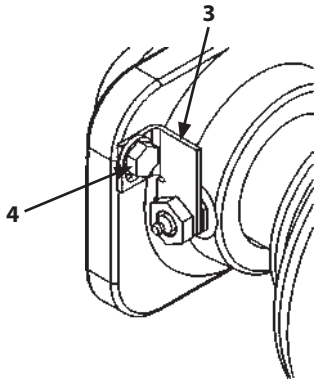

MDAA-07-057-3 ja

Adjusting the Tracks

CAUTION

It is abnormal if the track cannot be adjusted. A strong force acts on the spring in the track adjuster so the grease in the cylinder is at high pressure. Improper handling during adjustment or disassembly is extremely dangerous and could result in serious injury or death. Consult your authorized dealer as soon as possible for repairs.

To tighten the track, connect a grease gun to grease fitting (2) on the cylinder inside the side frame and add grease until within specifications.

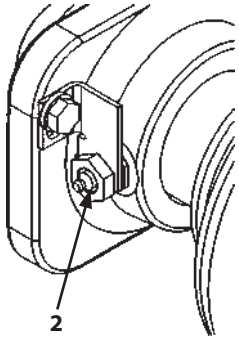

MDAA-07-057-2 ja

Long Arm

Long Arm Operation --- If Equipped

ZX120-7 class

1. The optional [3.01 m] long arm is only for light works such as loam loading, sludge handling, etc.. Do not use it for heavy works such as digging gravel. When the arm is used for digging, apply shallow cut to the ground to avoid tough digging, or arm damage may result.
2. When the machine is equipped with the [3.01 m] long arm, the hoe-bucket size must be limited to the followings due to stability and strength of the machine;

   * PCSA 0.45 m^3

     PCSA 0.52 m^3

   * with 700 mm shoe
3. When the machine is equipped with the long arm, connect the arm cylinder end to:

   Pin bore A (when the machine is in operation)

   Pin bore B (when the machine is transported)

IMPORTANT

Connect the arm cylinder rod end to pin bore B only when the machine is transported. Do not operate the digging or loading function with the arm cylinder connected to pin bore B as the bucket may hit the cab accidentally with this connection.

When transporting the machine, follow the procedure shown below to convert it into the transporting posture.

(a) Position the bucket cylinder with rod retracted a little from the fully extended position.

(b) Position the arm cylinder with rod retracted a little from the fully extended position.

(c) Lower the boom until the arm top comes into contact with the ground.

Unit: mm (ft•in)

Arm Cylinder Rod End Connected To:	Height of Front Attachment (H)	
	ZX120-7 class	
	Without Bucket	With Bucket
Pin Bore A	3050	3180
Pin Bore B	2680	2690

Dimensions include shoe lug height.

M163-05-001-1 ja

Blade

Blade Lever

ZX130-7

Use blade lever (1) on the operator's right to raise and lower the blade.

When the lever is released, it automatically returns to neutral, keeping the blade in its position until the lever is operated again.

1- Blade Lever
2- Blade Raise
3- Neutral
4- Blade Lower

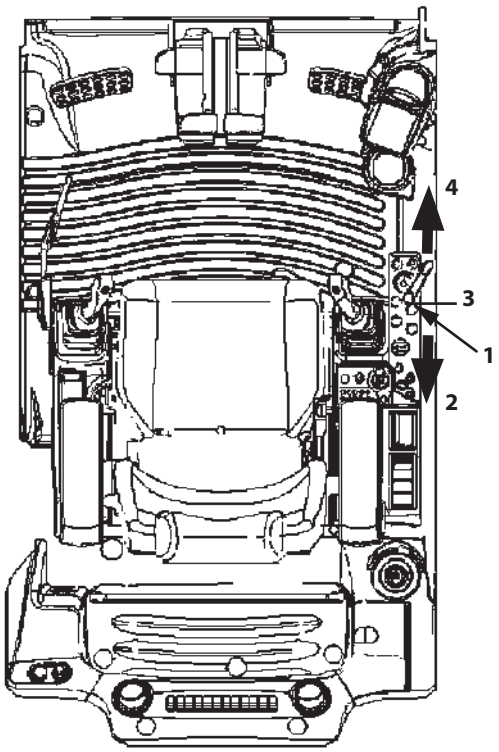

MDAA-13-001-1 ja

Precautions for Blade Operation

This blade is designed as a light service attachment for the hydraulic excavator. Please keep the following points in mind:

M155-14-008-1 ja

1. This blade is designed to be used for dozing work only. Do not attempt to dig deeply with the blade. Doing so will damage not only the blade but the undercarriage as well.
2. Do not apply intensive or uneven loads. Never apply high-speed impact to the blade by running the machine into a load.
3. Jacking up the machine with this blade, the surface beneath the blade comes under high pressure, increasing the risk of surface collapse.

   Always be sure that the surface is strong enough to support the weight of the machine during operation.

   Avoid dangerously uneven distribution of weight on the blade by maintaining even contact between the blade and the ground.
4. Never use this blade as an outrigger.
5. Avoid contact between the bucket and the blade while digging.

Avoid Hitting Blade with Front-End Attachment

When operating the machine with the blade positioned towards the front, the bucket or boom cylinder may come into contact with the blade if you are not careful. Be sure to prevent this from happening.

MZX5-13-025 ja

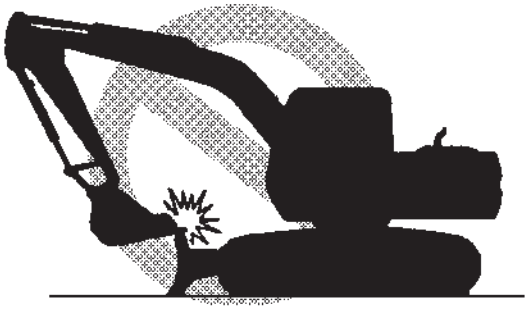

MZX5-13-026 ja

Avoid Hitting Blade with Bucket

When operating the machine with the blade positioned towards the front, the bucket or boom cylinder may come into contact with the blade if you are not careful. Be sure to prevent this from happening.

MZX5-13-026 ja

Avoid Striking the Blade into a Rock

Do not attempt to strike large rocks with the blade, as doing so will damage the blade and the blade cylinders, shortening their operating lives.

MZX5-13-027 ja

Blade Maintenance

Greasing --- every 250 hours

Lubricate all fittings shown in the figure.

- Blade Joint Pins (2 points)
- Blade Cylinder Rod (2 points)
- Blade Cylinder Bottom (2 points)

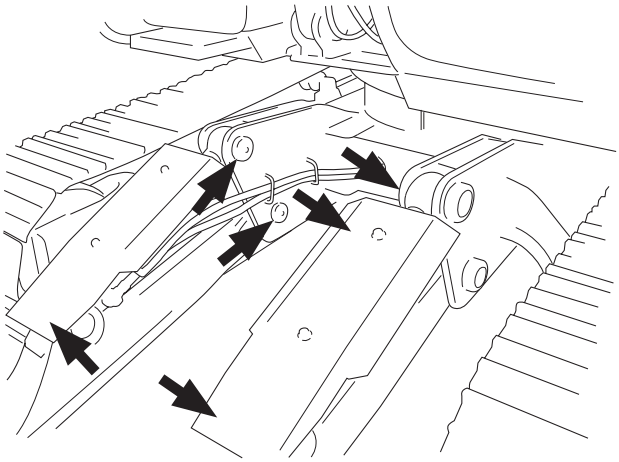

M175-13-002-1 ja

Transportation Figure for Machine Equipped with Blade

When transporting the machine equipped with a blade and a long arm front attachment on a trailer, place the blade in the opposite position toward the front attachment. Otherwise, the bucket may come in contact with the blade

M175-13-005 ja

Specifications

ZX130-7 with Blade

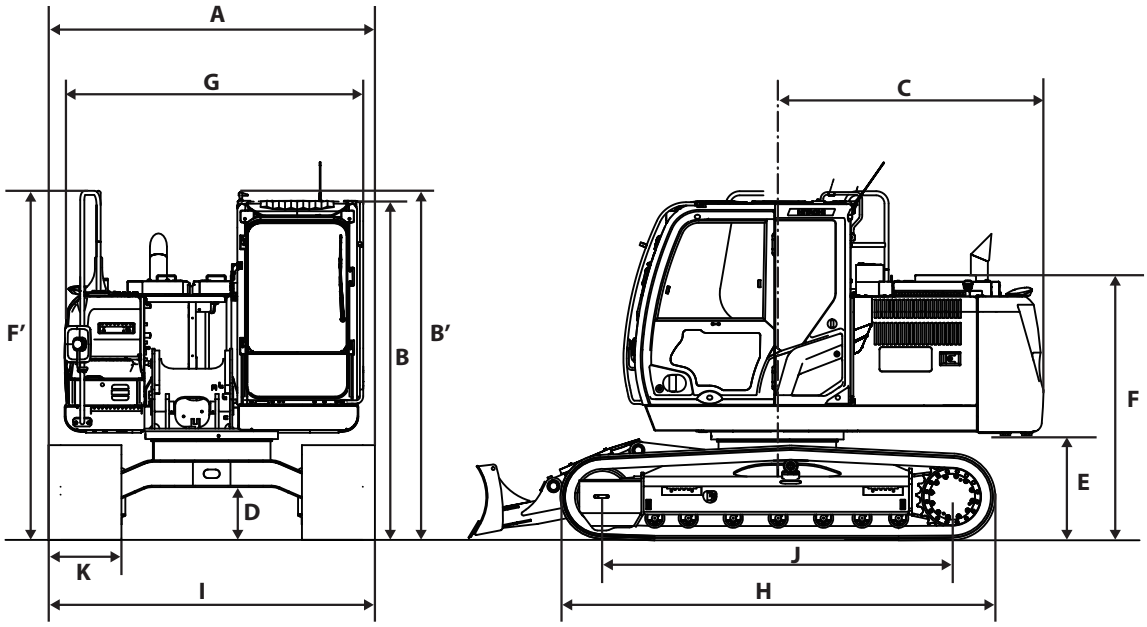

MDFY-13-023-1 ja

		ZX130-7 with Blade
Type of Front-End Attachment	-	2.52 m Arm
Bucket Capacity (Heaped)	m^3	ISO7451:2007 0.52
Counterweight Weight	kg	3000
Operating Weight	kg	14800
Base Machine Weight	kg	12000
Engine Type	-	TOYOTA 1KDE
Engine Power	kW/min^{-1}	ISO 14396: 74/2000
		ISO 9249: 73/2000
A: Overall Width (Excluding back mirrors)	mm	2490
B: Cab Height	mm	2790
B' Cab Top Handrail Height	mm	2870
C: Rear End Swing Radius	mm	2190
D: Minimum Ground Clearance	mm	410*
E: Counterweight Clearance	mm	840*
F: Engine Cover Height	mm	2190
F' Handrail Height	mm	2870
G: Overall Width of Upperstructure	mm	2460
H: Undercarriage Length	mm	3580
I: Undercarriage Width	mm	2490
J: Sprocket Center to Idler Center	mm	2880
K: Track Shoe Width	mm	500 (Grouser shoe)
Ground Pressure	kPa	46

		ZX130-7 with Blade
Swing Speed	min^{-1}	13.3
Travel Speed (fast/slow)	km/h	5.5/3.3
Gradeability	°(tanθ)	35 (0.70)

*The dimensions do not include the height of the shoe lug.

Working Ranges

ZX130-7 with Blade

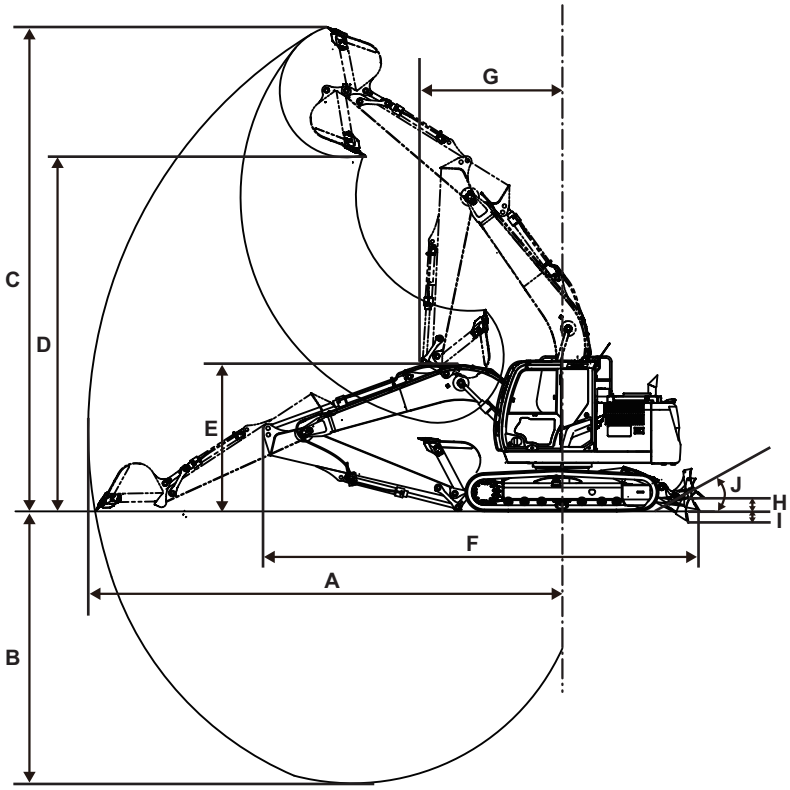

MDFY-13-024-2 ja

Model		ZX130-7 with Blade		
Item / Category		2.10 m Arm	2.52 m Arm	3.01 m Arm
A : Maximum Digging Reach	mm	7940	8300	8770
B : Maximum Digging Depth	mm	5120	5540	6030
C : Maximum Cutting Height	mm	8400	8600	8930
D : Maximum Dumping Height	mm	5990	6190	6520
E : Overall Height	mm	2670	2800	2680*
F : Overall Length	mm	8030	8030	8040*
G : Minimum Swing Radius	mm	2380	2400	2620
H : Max. Raising Height	mm	480		
I : Max. Digging Depth	mm	530		
J : Max. Digging Depth	degree	23		

NOTE

*The dimensions do not include height of the shoe lug (except Item E). * The dimensions asterisked are for transport pin position.*

Shoe Types and Applications

ZX130-7 with Blade

Shoe Width		500 mm Grouser Shoe	600 mm Grouser Shoe	700 mm Grouser Shoe	500 mm Pad Crawler Shoe
Application		For Ordinary Ground (Standard)	For Weak Footing (Option)	For Weak Footing (Option)	For Paved Road (Option)
Operating Weight	kg	14800	15000	15300	14700
Base Machine Weight	kg	12000	12200	12400	11900
Counterweight Weight	kg	3000	3000	3000	3000
Cab Height	mm	2870*2	2870*2	2870*2	2910*2
Minimum Ground Clearance	mm	410*1	410*1	410*1	470
Undercarriage Length	mm	3580	3580	3580	3660
Undercarriage Width	mm	2490	2590	2690	2490
Ground Pressure	kPa	46	39	34	46

*1 The dimensions do not include the height of the shoe lug.

*2 The dimensions include the height of the handrail on cab.

NOTE

- *The specifications for the front-end attachment are for a 2.52 m arm with PCSA 0.52 m^3 bucket.*
- *600 mm, 700 mm grouser shoe and 500 mm pad crawler shoe should not be used on gravel or rocky ground.*

Bucket Teeth

Bucket Teeth (Transverse-Type-Pin-Used Type)
(ZX200-7, 240-7, 300-7, 330-7 class only)

Replacement Procedure

CAUTION

Guard against injury from flying pieces of metal. Wear goggles or safety glasses.

1. Securely lower the bucket to the ground.
2. Use hammer (3) and drift (2) to drive out transverse-type lock pin (1) to remove tooth (4).

   NOTE

   Be sure to use drift (2) thinner than lock pin (1).

3. Clean shank (5) surface. Attach a new tooth (4) onto shank (5). Insert lock pin (1) as deep as it goes. Then, drive lock pin (1) using hammer (3) and drift (2) to securely lock tooth (4).

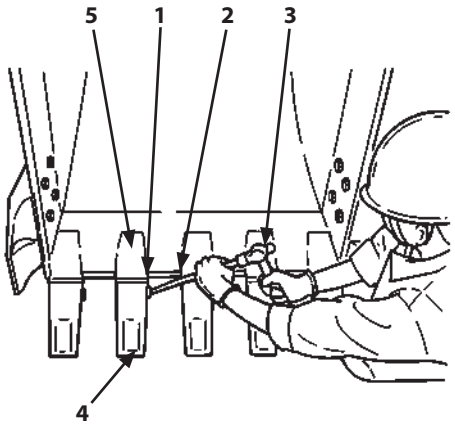

M157-14-013-1 ja

2-Piece Boom

2-piece Boom Operation

The 2-piece boom can be operated using attachment pedal (1) located on the left front of the seat, as illustrated.

CAUTION

Be sure to lock attachment pedal (1) with pedal lock (2) when attachment pedal (1) is not in use. Do not step on attachment pedal (1).

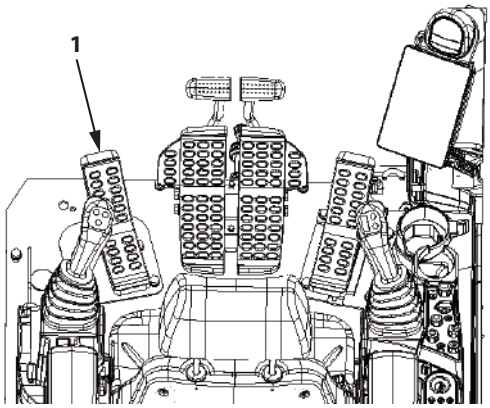

MDFY-13-006-1 ja

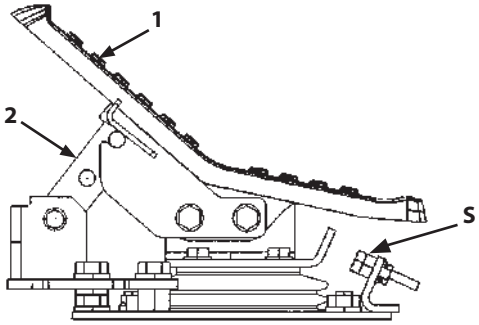

Locked Attachment Pedal

MDFY-13-016-1 ja

S: Stopper Bolt

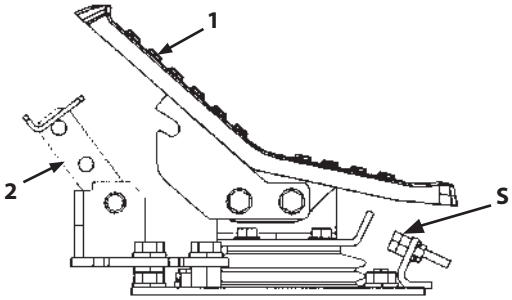

Unlocked Attachment Pedal

MDFY-13-017-1 ja

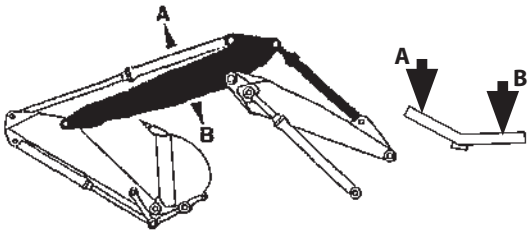

M1G6-05-018-1 ja

A: Raise B: Lower

Maintenance (2-Piece Boom)

Front Joint Pins

Bucket --- every 500 hours (first time after 250 hours)

IMPORTANT

Greasing intervals differ according to king of bucket used. (Refer to Greasing Chart (7-14) page.)

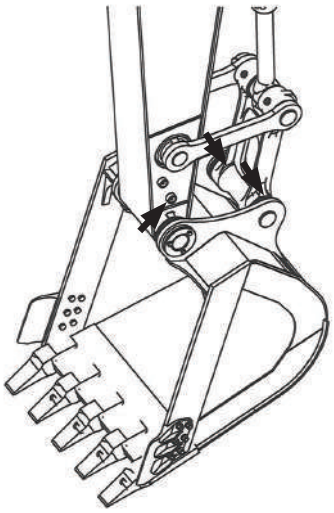

MDFY-07-061-2 ja

Link Pins --- every 500 hours (first time after 250 hours)

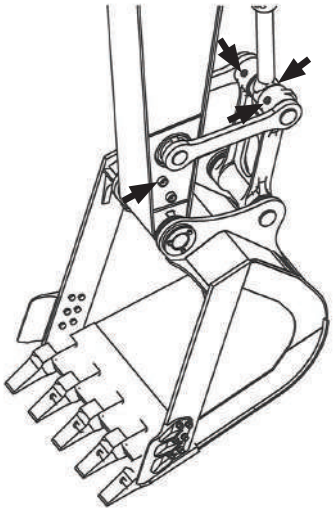

MDFY-07-061-4 ja

Other --- every 500 hours

- Boom Cylinder Bottom

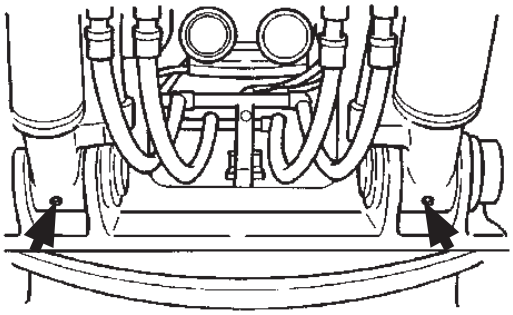

M157-07-156-3 ja

- Boom Foot

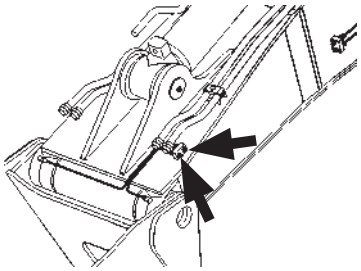

M1G6-15-001-2 ja

- Boom and Arm Joint Pins, Arm Cylinder Rod Pin and Bucket Cylinder Bottom Pin.

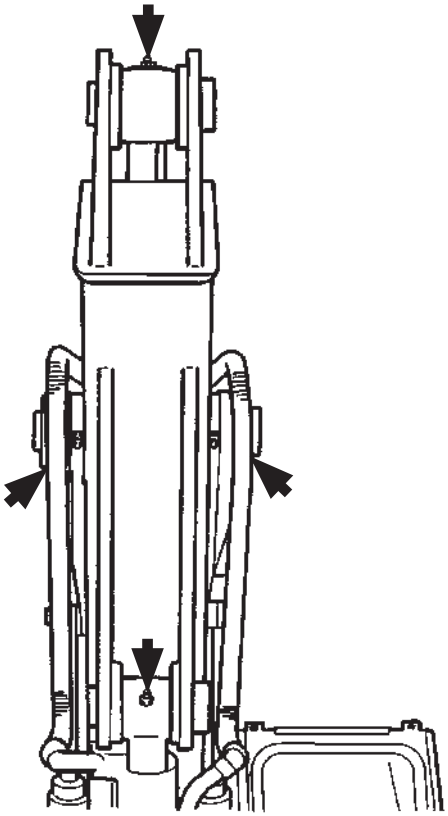

M157-07-157-2 ja

- Boom Cylinder Rod Pins and Positioning Cylinder Bottom Pin.

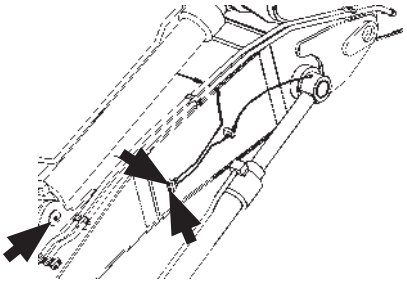

M1G6-15-002-1 ja

- Bottom Boom and Upper Boom Joint Pin, Positioning Cylinder Rod Pin and Arm Cylinder Bottom Pin.

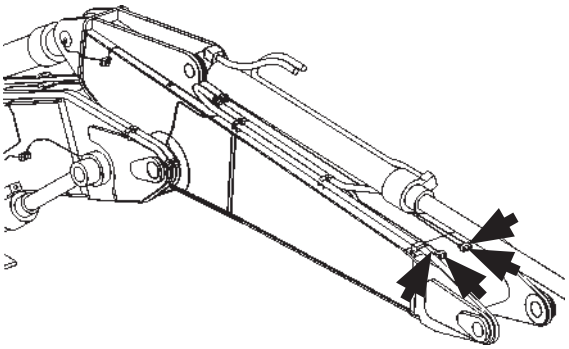

M1G6-15-003-1 ja

Specifications ZX120-7 class 2-piece Boom

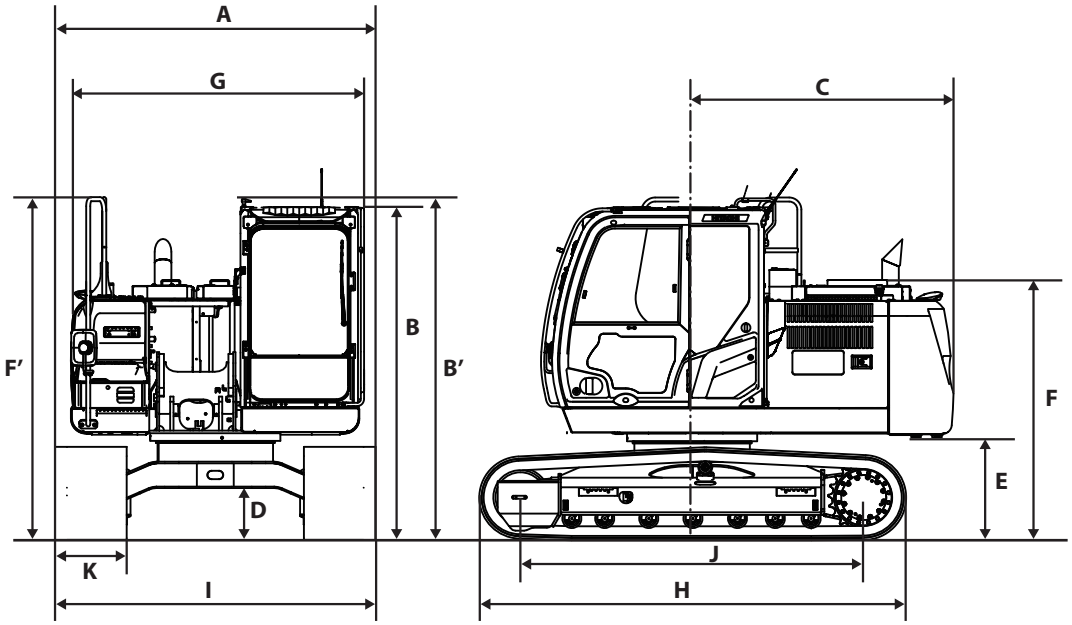

MDFY-12-009-2 ja

Model		ZX130-7 2-piece Boom	ZX130LCN-7 2-piece Boom
Type of Front-End Attachment	-	2.52 m Arm	
Bucket Capacity (Heaped)	m^3	ISO7451:2007 0.52	
Counterweight Weight	kg	3000	3000
Operating Weight	kg	14200	14400
Base Machine Weight	kg	10900	11000
Engine Type	-	TOYOTA 1KDE	
Engine Power	kW/min^{-1}	ISO 14396: 74/2000	
		ISO 9249: 73/2000	
A : Overall Width (Excluding back mirrors)	mm	2490	
B : Cab Height	mm	2790	
B' : Cab Top Handrail Height	mm	2870	
C : Rear End Swing Radius	mm	2190	
D : Minimum Ground Clearance	mm	410*	
E : Counterweight Clearance	mm	840*	
F : Engine Cover Height	mm	2190*	
F': Handrail Height	mm	2870	
G : Overall Width of Upperstructure	mm	2460*	
H : Undercarriage Length	mm	3580	3750
I : Undercarriage Width	mm	2460	
J : Sprocket Center to Idler Center	mm	2880	3050
K : Track Shoe Width	mm	500 (Grouser shoe)	
Ground Pressure	kPa	44	42

Swing Speed	min^{-1}	13.3
Travel Speed (fast/slow)	km/h	5.5/3.3
Gradeability	°(tanθ)	35 (0.70)

* The dimensions do not include the height of the shoe lug.

Working Ranges ZX120-7 class 2-piece Boom

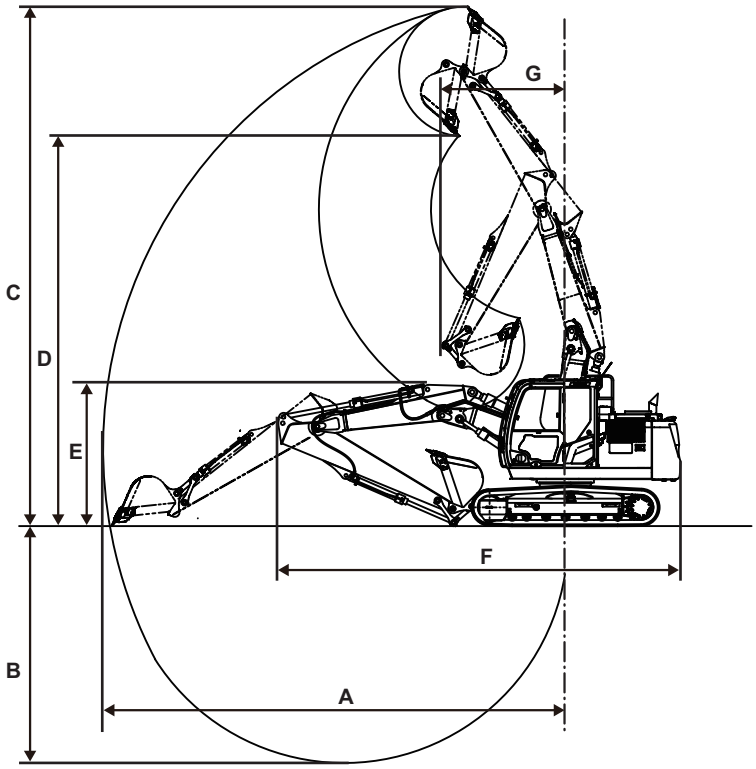

MDFY-13-025-2 ja

Category Item	2.10 m Arm Backhoe mm	2.52 m Arm Backhoe mm	3.01 m Arm Backhoe mm
A : Maximum Digging Reach	7930	8300	8780
B : Maximum Digging Depth	4910	5310	5800
C : Maximum Cutting Height	9100	9420	9850
D : Maximum Dumping Height	6640	6960	7390
E : Overall Height	2490	2650	2610*
F : Overall Length	7650	7650	7650*
G : Minimum Swing Radius	1780	1850	2040

* Not including shoe lug

Shoe Types and Applications ZX130-7 2-piece Boom

Shoe Width		500 mm Grouser Shoe	600 mm Grouser Shoe	700 mm Grouser Shoe	500 mm Pad Crawler Shoe
Application		For Ordinary Ground (Standard)	For Weak Footing (Optional)	For Weak Footing (Optional)	For Paved Road (Optional)
Operating Weight	kg	14200	14400	14600	14100
Base Machine Weight	kg	10900	11100	11300	10800
Counterweight Weight	kg	3000	3000	3000	3000
Cab Height	mm	2870*2	2870*2	2870*2	2910*2
Minimum Ground Clearance	mm	410*1	410*1	410*1	470
Undercarriage Length	mm	3580	3580	3580	3660
Undercarriage Width	mm	2490	2590	2690	2490
Ground Pressure	kPa	44	37	32	44

*1 The dimensions do not include the height of the shoe lug.

*2 The dimensions include the height of the handrail on cab.

NOTE

- *The specifications for the front-end attachment is for 2.52 m arm with PCSA 0.52 m^3 bucket.*
- *600 mm, 700 mm grouser shoe and 500 mm pad crawler shoe should not be used on gravel or rocky ground.*

Shoe Types and Applications ZX130LCN-7 2-piece Boom

Shoe Width		500 mm Grouser Shoe	600 mm Grouser Shoe	700 mm Grouser Shoe
Application		For Ordinary Ground (Standard)	For Weak Footing (Optional)	For Weak Footing (Optional)
Operating Weight	kg	14400	14600	14800
Base Machine Weight	kg	11000	11200	11500
Counterweight Weight	kg	3000	3000	3000
Cab Height	mm	2870*2	2870*2	2870*2
Minimum Ground Clearance	mm	410*1	410*1	410*1
Undercarriage Length	mm	3750	3750	3750
Undercarriage Width	mm	2490	2590	2690
Ground Pressure	kPa	43	36	31

*1 The dimensions do not include the height of the shoe lug.

*2 The dimensions include the height of the handrail on cab.

NOTE

- *The specifications for the front-end attachment is for 2.52 m arm with PCSA 0.52 m^3 bucket.*
- *600 mm, 700 mm grouser shoe and 500 mm pad crawler shoe should not be used on gravel or rocky ground.*

Specifications ZX160-7, 180-7 class 2-piece Boom

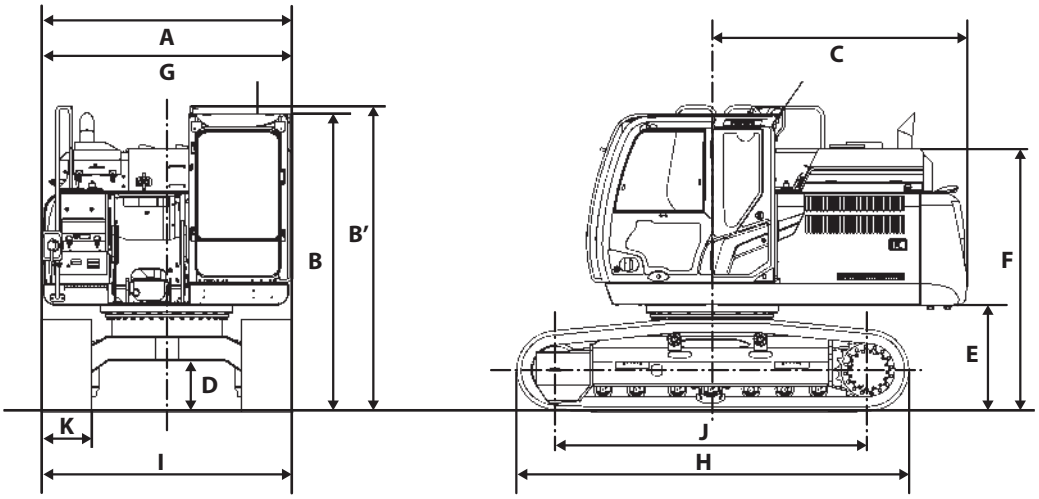

MDFY-13-019-1 ja

Model		ZX160LC-7 2-piece Boom	ZX180LC-7 2-piece Boom	ZX180LCN-7 2-piece Boom
Type of Front-End Attachment	-	2.58 m Arm	2.71 m Arm	
Bucket Capacity (Heaped)	m^3	ISO7451:2007 0.63	ISO7451:2007 0.70	
Counterweight Weight	kg	3050	3370	
Operating Weight	kg	18200	20000	19700
Base Machine Weight	kg	14200	15200	14900
Engine Type	-	YANMAR 4TN107FHT-6YHB		
Engine Power	kW/min^{-1}	ISO 14396: 101.3/1900		
		ISO 9249: 98.6/1900		
A : Overall Width (Excluding back mirrors)	mm	2520	2800	2520
B : Cab Height	mm	2950		
B' : Cab Top Handrail Height	mm	3020		
C : Rear End Swing Radius	mm	2550		
D : Minimum Ground Clearance	mm	470*	450*	
E : Counterweight Clearance	mm	980*		
F : Engine Cover Height	mm	2650*		
G : Overall Width of Upperstructure	mm	2500		
H : Undercarriage Length	mm	3920	4170	
I : Undercarriage Width	mm	2500	2800	2500
J : Sprocket Center to Idler Center	mm	3100	3370	
K : Track Shoe Width	mm	500 (Grouser shoe)	600 (Grouser shoe)	500 (Grouser shoe)
Ground Pressure	kPa	53	45	53
Swing Speed	min^{-1}	13.3	14.1	
Travel Speed (fast/slow)	km/h	5.3/3.4		
Gradeability	°(tanθ)	35 (0.70)		

*The dimensions do not include the height of the shoe lug.

Working Ranges ZX160-7, 180-7 class 2-piece Boom

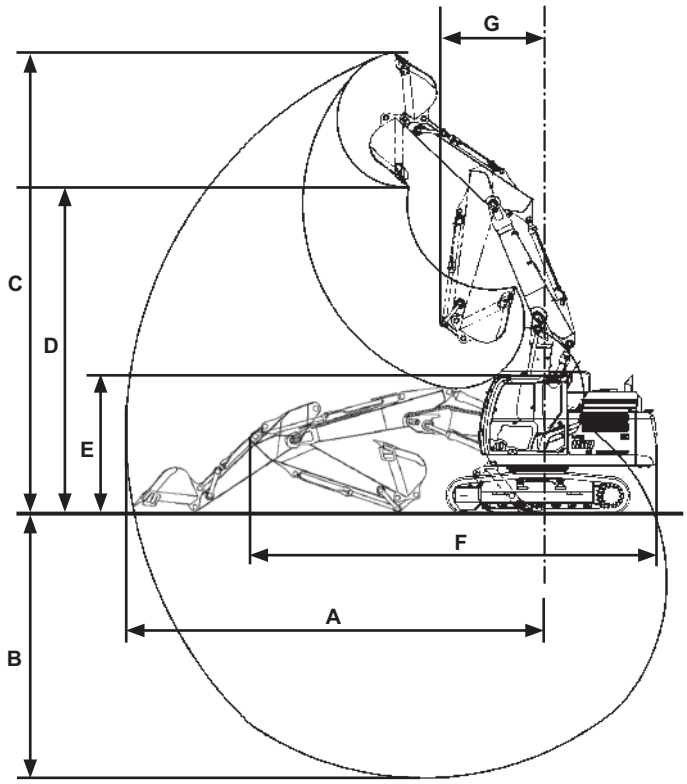

MDFY-13-020-1 ja

Category	ZX160LC-7	ZX180LC-7, 180LCN-7
	2.58m Arm	2.71m Arm
	Backhoe	Backhoe
Item	mm	mm
A : Maximum Digging Reach	8690	9350
B : Maximum Digging Depth	5580*	6050*
C : Maximum Cutting Height	9740*	10530*
D : Maximum Dumping Height	6900*	7590*
E : Overall Height	3030	3040
F : Overall Length	8420	8910
G : Minimum Swing Radius	2070	2230

*Not including shoe lug

Shoe Types and Applications ZX160LC-7 2-piece Boom

Shoe Width		500 mm Grouser Shoe	600 mm Grouser Shoe	700 mm Grouser Shoe	800 mm Grouser Shoe
Application		For Ordinary Ground (Standard)	For Weak Footing (Optional)	For Weak Footing (Optional)	For Weak Footing (Optional)
Operating Weight	kg	18200	18400	18700	19000
Base Machine Weight	kg	14200	14400	14700	15000
Counterweight Weight	kg	3050	3050	3050	3050
Cab Height	mm	3020*2	3020*2	3020*2	3020*2
Minimum Ground Clearance	mm	470*1	470*1	470*1	470*1
Undercarriage Length	mm	3920	3920	3920	3920
Undercarriage Width	mm	2500	2590	2690	2890
Ground Pressure	kPa	53	44	38	34

*1The dimensions do not include the height of the shoe lug.

*2The dimensions include the height of the handrail on cab.

NOTE

- *The specifications for the front-end attachment is for 2.58 m arm with PCSA 0.6 m^3 bucket.*
- *600 mm, 700 mm and 800 mm grouser shoe should not be used on gravel or rocky ground.*

Shoe Types and Applications ZX180LC-7 2-piece Boom

Shoe Width		600 mm Grouser Shoe	700 mm Grouser Shoe	800 mm Grouser Shoe
Application		For Ordinary Ground (Standard)	For Weak Footing (Optional)	For Weak Footing (Optional)
Operating Weight	kg	20000	20300	20500
Base Machine Weight	kg	15200	15500	15800
Counterweight Weight	kg	3370	3370	3370
Cab Height	mm	3020*2	3020*2	3020*2
Minimum Ground Clearance	mm	450*1	450*1	450*1
Undercarriage Length	mm	4170	4170	4170
Undercarriage Width	mm	2800	2900	3000
Ground Pressure	kPa	45	39	34

*1The dimensions do not include the height of the shoe lug.

*2The dimensions include the height of the handrail on cab.

NOTE

- *The specifications for the front-end attachment is for 2.71 m arm with PCSA 0.7 m^3 bucket.*
- *700 mm and 800 mm grouser shoe should not be used on gravel or rocky ground.*

Shoe Types and Applications ZX180LCN-7 2-piece Boom

Shoe Width		500 mm Grouser Shoe	600 mm Grouser Shoe	700 mm Grouser Shoe
Application		For Ordinary Ground (Standard)	For Weak Footing (Optional)	For Weak Footing (Optional)
Operating Weight	kg	19700	19900	20200
Base Machine Weight	kg	14900	15200	15400
Counterweight Weight	kg	3370	3370	3370
Cab Height	mm	3020*2	3020*2	3020*2
Minimum Ground Clearance	mm	450*1	450*1	450*1
Undercarriage Length	mm	4170	4170	4170
Undercarriage Width	mm	2500	2590	2690
Ground Pressure	kPa	53	44	39

*1The dimensions do not include the height of the shoe lug.

*2The dimensions include the height of the handrail on cab.

NOTE

- *The specifications for the front-end attachment is for 2.71 m arm with PCSA 0.7 m^3 bucket.*
- *600 mm and 700 mm grouser shoe should not be used on gravel or rocky ground.*

Specifications ZX200-7 class 2-piece Boom

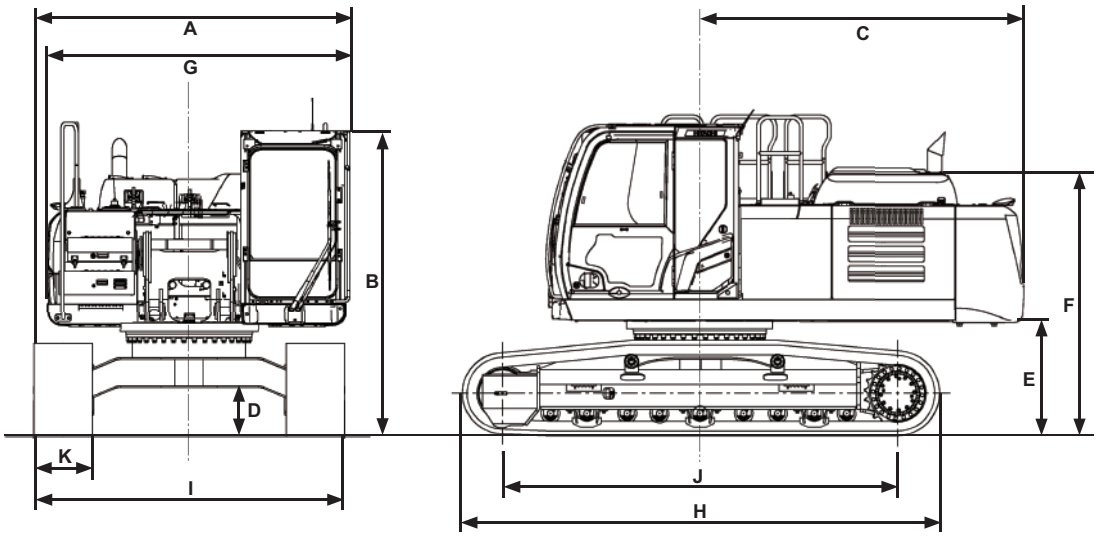

MDFY-12-005-1 ja

Model		ZX210LC-7 2-piece Boom	ZX210LCN-7 2-piece Boom	ZX240N-7 2-piece Boom
Type of Front-End Attachment	-	2.91 m Arm		
Bucket Capacity (Heaped)	m^3	ISO7451:2007 0.80		
Counterweight Weight	kg	4850	4700	
Operating Weight	kg	23100	22500	23300
Base Machine Weight	kg	17900	17500	18300
Engine Type	-	Isuzu 4HK1		
Engine Power	kW/min^{-1}	ISO 14396: 128.4/2000		
		ISO 9249 122/2000		
A : Overall Width (Excluding back mirrors)	mm	2990	2500	
B : Cab Height	mm	2950		
C : Rear End Swing Radius	mm	2910	2890	
D : Minimum Ground Clearance	mm	450*		
E : Counterweight Clearance	mm	990*	980*	
F : Engine Cover Height	mm	2500*		
G : Overall Width of Upperstructure	mm	2700	2480	
H : Undercarriage Length	mm	4450		4260
I : Undercarriage Width	mm	2990	2480	
J : Sprocket Center to Idler Center	mm	3660		3460
K : Track Shoe Width	mm	600 (Grouser shoe)	500 (Grouser shoe)	550 (Grouser shoe)
Ground Pressure	kPa	48	56	56
Swing Speed	min^{-1}	11.4		
Travel Speed (fast/slow)	km/h	5.5/3.5		
Gradeability	°(tanθ)	35 (0.70)		

*The dimensions do not include the height of the shoe lug (26 mm).

Working Ranges ZX200-7 class 2-piece Boom

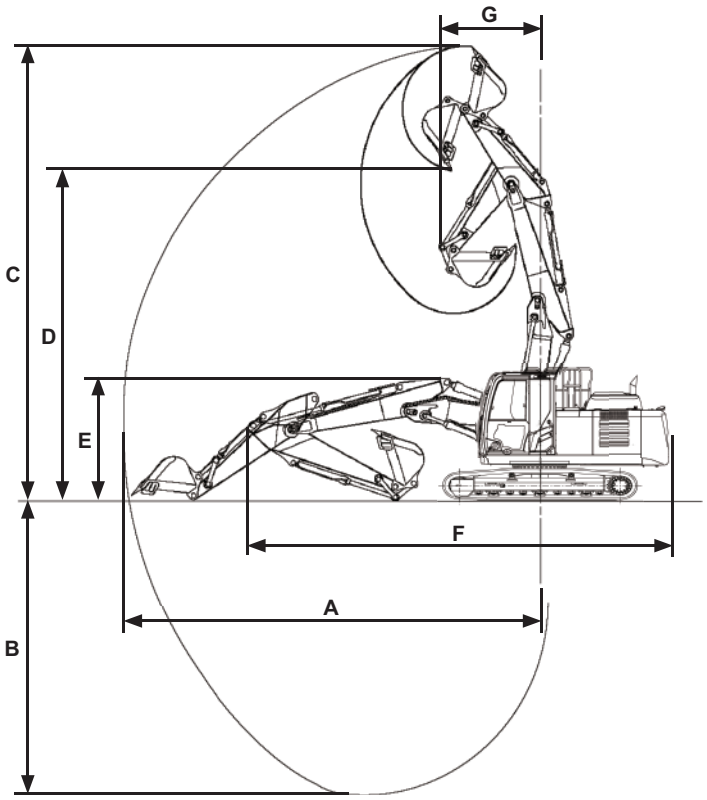

MDFY-13-012-1 ja

Category	ZX210LC-7	ZX210LCN-7, 240N-7	ZX210LC-7	ZX210LCN-7, 240N-7
	2.42m Arm		2.91m Arm	
	Backhoe		Backhoe	
Item	mm		mm	
A : Maximum Digging Reach	9430		9930	
B : Maximum Digging Depth	5720*1		6230*1	
C : Maximum Cutting Height	10640*1		11080*1	
D : Maximum Dumping Height	7700*1		8150*1	
E : Overall Height	3060		3030	
F : Overall Length	9700	9680	9650	9630
G : Minimum Swing Radius	2630		2320	

*1 The dimensions do not include the height of the shoe lug.

Shoe Types and Applications ZX210LC-7 2-piece Boom

Shoe Width		600 mm Grouser Shoe	700 mm Grouser Shoe	800 mm Grouser Shoe	900 mm Grouser Shoe	600 mm Pad Crawler shoe
Application		For Ordinary Ground (Standard)	For Weak Footing (Optional)	For Weak Footing (Optional)	For Weak Footing (Optional)	For Paved Road (Optional)
Operating Weight	kg	23100	23300	23600	23900	23300
Base Machine Weight	kg	17900	18100	18400	18700	18100
Counterweight Weight	kg	4850	4850	4850	4850	4850
Cab Height	mm	2950	2950	2950	2950	3030
Minimum Ground Clearance	mm	450*	450*	450*	450*	530
Undercarriage Length	mm	4450	4450	4450	4450	4570
Undercarriage Width	mm	2990	3090	3190	3290	2990
Ground Pressure	kPa	48	41	37	33	48

* The dimensions do not include the height of the shoe lug.

NOTE

- *The specifications for the front-end attachment is for 2.91 m arm with PCSA 0.8 m^3 bucket.*
- *700 mm, 800 mm, 900 mm grouser shoe and 600 mm pad crawler shoe should not be used on gravel or rocky ground.*

Shoe Types and Applications ZX210LCN-7 2-piece Boom

Shoe Width		500 mm Grouser Shoe	600 mm Grouser Shoe
Application		For Ordinary Ground (Standard)	For Weak Footing (Option)
Operating Weight	kg	22500	22700
Base Machine Weight	kg	17500	17700
Counterweight Weight	kg	4700	4700
Cab Height	mm	2950	2950
Minimum Ground Clearance	mm	450*	450*
Undercarriage Length	mm	4450	4450
Undercarriage Width	mm	2480	2580
Ground Pressure	kPa	56	47

* The dimensions do not include the height of the shoe lug.

NOTE

- *The specifications for the front-end attachment is for 2.91 m arm with PCSA 0.8 m^3 bucket.*
- *600 mm grouser shoe should not be used on gravel or rocky ground.*

Shoe Types and Applications ZX240N-7 2-piece Boom

Shoe Width		550 mm Grouser Shoe
Application		For Ordinary Ground (Standard)
Operating Weight	kg	23300
Base Machine Weight	kg	18300
Counterweight Weight	kg	4700
Cab Height	mm	2950
Minimum Ground Clearance	mm	450*
Undercarriage Length	mm	4260
Undercarriage Width	mm	2480
Ground Pressure	kPa	56

* The dimensions do not include the height of the shoe lug.

Specifications ZX250LC-7, 250LCN-7 2-piece Boom

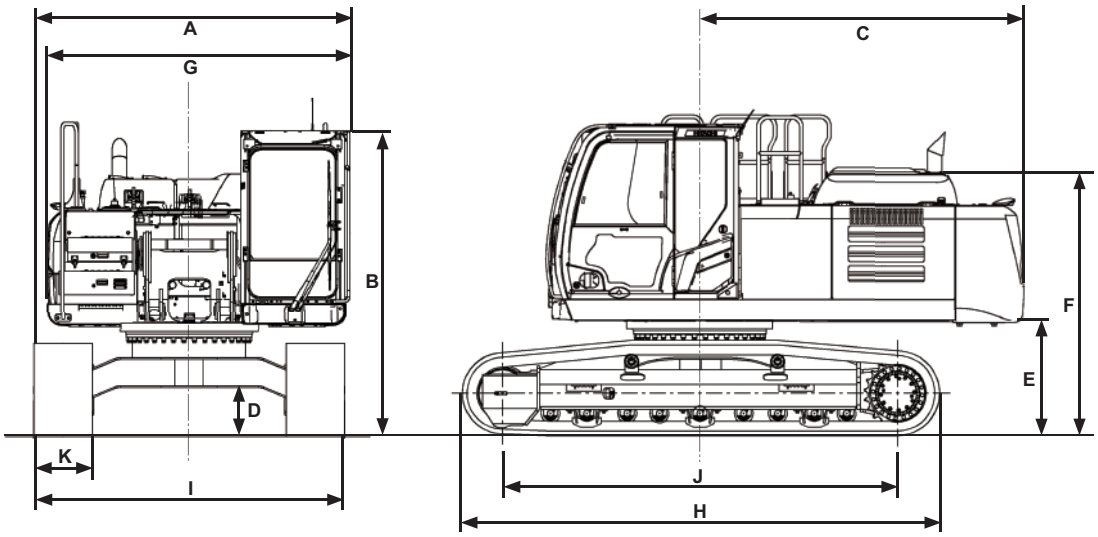

MDFY-12-005-1 ja

Model		ZX250LC-7 2-piece Boom	ZX250LCN-7 2-piece Boom
Type of Front-End Attachment	-	2.96 m Arm	
Bucket Capacity (Heaped)	m^3	ISO7451:2007 1.0	
Counterweight Weight	kg	6200	
Operating Weight	kg	27100	27000
Base Machine Weight	kg	20600	20500
Engine Type	-	Isuzu 4HK1	
Engine Power	kW/min^{-1}	ISO 14396: 140/2000	
		ISO 9249: 132/2000	
A : Overall Width (Excluding back mirrors)	mm	3190	2990
B : Cab Height	mm	3010	
C : Rear End Swing Radius	mm	3140	
D : Minimum Ground Clearance	mm	460*1	
E : Counterweight Clearance	mm	1050*1	
F : Engine Cover Height	mm	2570*1	
G : Overall Width of Upperstructure	mm	2870	
H : Undercarriage Length	mm	4640	
I : Undercarriage Width	mm	3190	2990
J : Sprocket Center to Idler Center	mm	3850	
K : Track Shoe Width	mm	600 (Grouser shoe)	
Ground Pressure	kPa	53.7	53.6
Swing Speed	min^{-1}	10.7	
Travel Speed (fast/slow)	km/h	5.5/3.4	
Gradeability	°(tanθ)	35 (0.70)	

*1 The dimensions do not include the height of the shoe lug.

Working Ranges ZX250LC-7, 250LCN-7 2-piece Boom

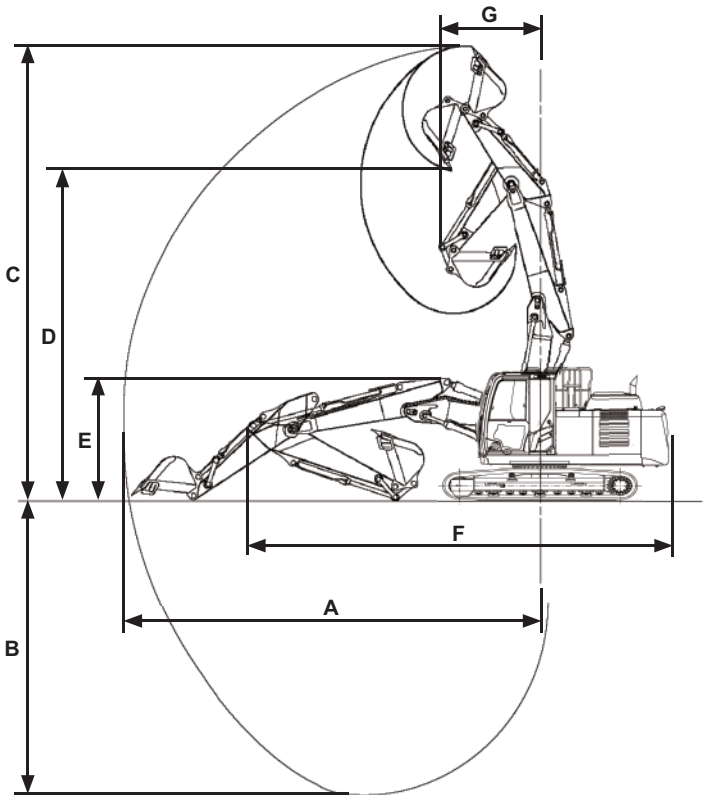

MDFY-13-012-1 ja

Category	2.50 m Arm	2.96 m Arm
	Backhoe	Backhoe
Item	mm	mm
A : Maximum Digging Reach	10010	10430
B : Maximum Digging Depth	6080*1	6530*1
C : Maximum Cutting Height	11470*1	11840*1
D : Maximum Dumping Height	8350*1	8720*1
E : Overall Height	3200	3090
F : Overall Length	10450	10420
G : Minimum Swing Radius	2560	2310

*1 The dimensions do not include the height of the shoe lug.

Shoe Types and Applications ZX250LC-7 2-piece Boom

Shoe Width		600 mm Grouser Shoe	700 mm Grouser Shoe	800 mm Grouser Shoe
Application		For Ordinary Ground	For Weak Footing	For Weak Footing
Operating Weight	kg	27100	27500	27800
Base Machine Weight	kg	20600	21000	21300
Counterweight Weight	kg	6200	6200	6200
Cab Height	mm	3010	3010	3010
Minimum Ground Clearance	mm	460*1	460*1	460*1
Undercarriage Length	mm	4640	4640	4640
Undercarriage Width	mm	3190	3290	3390
Ground Pressure	kPa	53.7	46.8	41.3

*1 The dimensions do not include the height of the shoe lug.

NOTE

- *The specifications for the front-end attachment is for 2.96 m arm with PCSA 1.0 m^3 bucket.*
- *700 mm and 800 mm grouser shoe should not be used on gravel or rocky ground.*

Shoe Types and Applications ZX250LCN-7 2-piece Boom

Shoe Width		600 mm Grouser Shoe	700 mm Grouser Shoe	800 mm Grouser Shoe
Application		For Ordinary Ground	For Weak Footing	For Weak Footing
Operating Weight	kg	27000	27500	27700
Base Machine Weight	kg	20500	20900	21200
Counterweight Weight	kg	6200	6200	6200
Cab Height	mm	3010	3010	3010
Minimum Ground Clearance	mm	460*1	460*1	460*1
Undercarriage Length	mm	4640	4640	4640
Undercarriage Width	mm	2990	3090	3190
Ground Pressure	kPa	53.6	46.6	41.2

*1 The dimensions do not include the height of the shoe lug.

NOTE

- *The specifications for the front-end attachment is for 2.96 m arm with PCSA 1.0 m^3 bucket.*
- *700 mm and 800 mm grouser shoe should not be used on gravel or rocky ground.*

Specifications ZX300LC-7, 300LCN-7 2-piece Boom

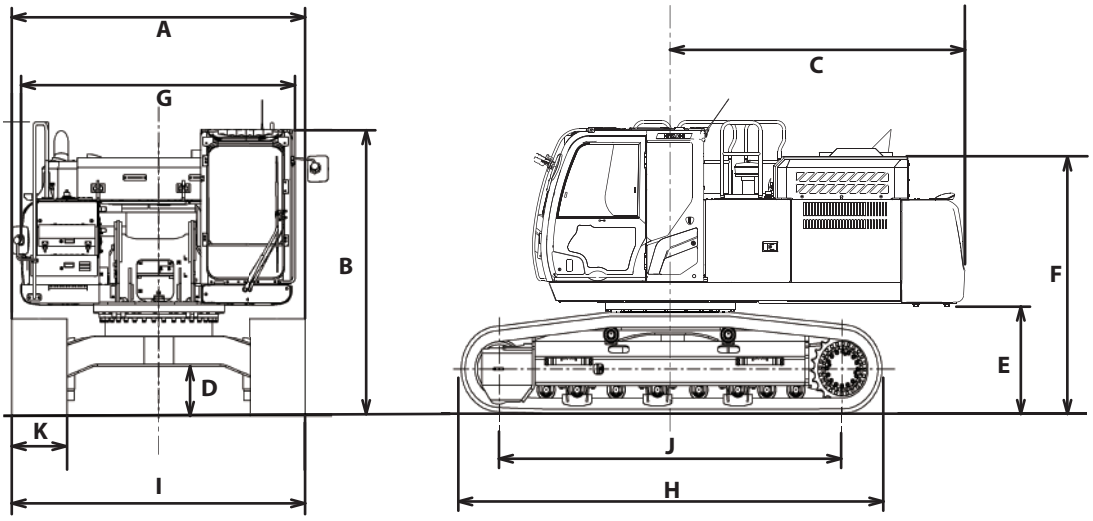

MDFY-12-002-1 ja

Model		ZX300LC-7 2-piece Boom	ZX300LCN-7 2-piece Boom
Type of Front-End Attachment	-	3.11 m Arm	
Bucket Capacity (Heaped)	m^3	ISO7451:2007 1.25	
Counterweight Weight	kg	5600	
Operating Weight	kg	31000	30800
Base Machine Weight	kg	23900	23700
Engine Type	-	Isuzu 6HK1	
Engine Power	kW/min^{-1}	ISO 14396: 197/1900	
		ISO 9249: 186/1900	
A : Overall Width (Excluding back mirrors)	mm	3190	2990
B : Cab Height	mm	3120	
C : Rear End Swing Radius	mm	3250	
D : Minimum Ground Clearance	mm	510*1	
E : Counterweight Clearance	mm	1130*1	
F : Engine Cover Height	mm	2720*1	
G : Overall Width of Upperstructure	mm	2990	
H : Undercarriage Length	mm	4970	
I : Undercarriage Width	mm	3190	2990
J : Sprocket Center to Idler Center	mm	4050	
K : Track Shoe Width	mm	600 (Grouser shoe)	
Ground Pressure	kPa	57.9	57.7
Swing Speed	min^{-1}	10.3	
Travel Speed (fast/slow)	km/h	5.2/3.1	
Gradeability	°(tanθ)	35(0.70)	

*1 The dimensions do not include the height of the shoe lug.

Working Ranges ZX300LC-7, 300LCN-7 2-piece Boom

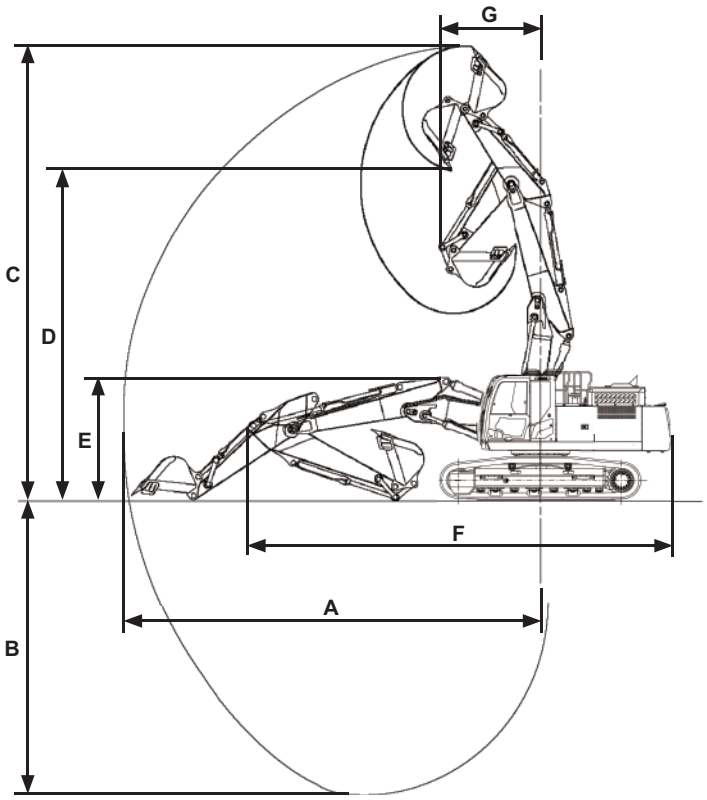

MDFY-13-013-1 ja

Category	2.42 m Arm	3.11 m Arm
	Backhoe	Backhoe
Item	mm	mm
A : Maximum Digging Reach	10070	10740
B : Maximum Digging Depth	6050*1	6740*1
C : Maximum Cutting Height	11450*1	12020*1
D : Maximum Dumping Height	8340*1	8900*1
E : Overall Height	3220	3150
F : Overall Length	10420	10400
G : Minimum Swing Radius	2870	2630

*1 The dimensions do not include the height of the shoe lug.

Shoe Types and Applications ZX300LC-7 2-piece Boom

Shoe Width		600 mm Grouser Shoe	700 mm Grouser Shoe	800 mm Grouser Shoe	900 mm Grouser Shoe
Application		For Ordinary Ground	For Weak Footing	For Weak Footing	For Weak Footing
Operating Weight	kg	31000	31400	31800	32200
Base Machine Weight	kg	23900	24200	24600	25000
Counterweight Weight	kg	5600	5600	5600	5600
Cab Height	mm	3120	3120	3120	3120
Minimum Ground Clearance	mm	510*1	510*1	510*1	510*1
Undercarriage Length	mm	4970	4970	4970	4970
Undercarriage Width	mm	3190	3290	3390	3490
Ground Pressure	kPa	57.9	50.3	44.6	40.1

*1 The dimensions do not include the height of the shoe lug.

NOTE

- *The specifications for the front-end attachment is for 3.11 m arm with PCSA 1.25 m^3 bucket.*
- *700 mm, 800 mm and 900 mm grouser shoe should not be used on gravel or rocky ground.*

Shoe Types and Applications ZX300LCN-7 2-piece Boom

Shoe Width		600 mm Grouser Shoe	700 mm Grouser Shoe
Application		For Ordinary Ground	For Weak Footing
Operating Weight	kg	30800	31200
Base Machine Weight	kg	23700	24100
Counterweight Weight	kg	5600	5600
Cab Height	mm	3120	3120
Minimum Ground Clearance	mm	510*1	510*1
Undercarriage Length	mm	4970	4970
Undercarriage Width	mm	2990	3090
Ground Pressure	kPa	57.7	50.0

*1 The dimensions do not include the height of the shoe lug.

NOTE

- *The specifications for the front-end attachment is for 3.11 m arm with PCSA 1.25 m^3 bucket.*
- *700 mm grouser shoe should not be used on gravel or rocky ground.*

Specifications ZX350LC-7, 350LCN-7 2-piece Boom

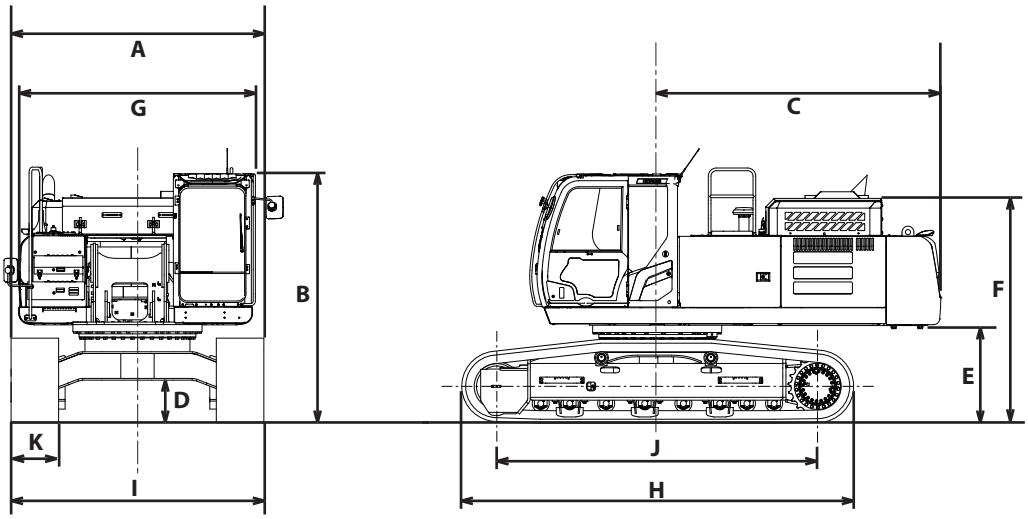

MDFY-12-001-1 ja

Model		ZX350LC-7 2-piece Boom	ZX350LCN-7 2-piece Boom
Type of Front-End Attachment	-	3.20 m Arm	
Bucket Capacity (Heaped)	m^3	ISO7451:2007 1.4	
Counterweight Weight	kg	7600	
Operating Weight	kg	36300	36200
Base Machine Weight	kg	27300	27200
Engine Type	-	Isuzu 6HK1	
Engine Power	kW/min^{-1}	ISO 14396: 210/1900	
		ISO 9249: 202/1900	
A : Overall Width (Excluding back mirrors)	mm	3190	2990
B : Cab Height	mm	3150	
C : Rear End Swing Radius	mm	3600	
D : Minimum Ground Clearance	mm	500*1	
E : Counterweight Clearance	mm	1160*1	
F : Engine Cover Height	mm	2880*1	
G : Overall Width of Upperstructure	mm	2990	
H : Undercarriage Length	mm	4970	
I : Undercarriage Width	mm	3190	2990
J : Sprocket Center to Idler Center	mm	4050	
K : Track Shoe Width	mm	600 (Grouser shoe)	
Ground Pressure	kPa	67.9	67.7
Swing Speed	min^{-1}	9.7	
Travel Speed (fast/slow)	km/h	5.0/3.2	
Gradeability	°(tanθ)	35(0.70)	

*1 The dimensions do not include the height of the shoe lug.

Working Ranges ZX350LC-7, 350LCN-7 2-piece Boom

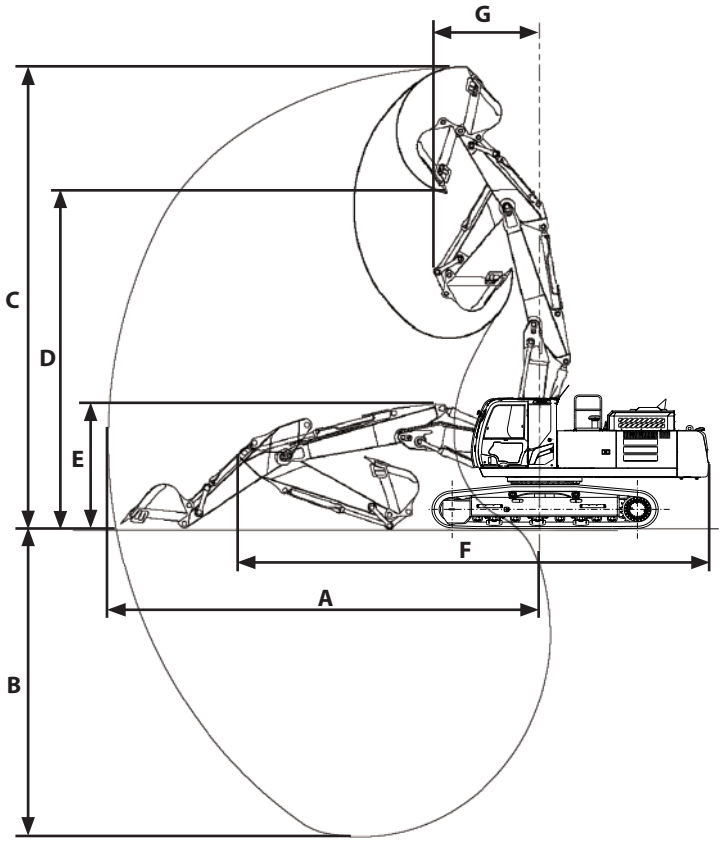

MDFY-13-014-2 ja

Category	2.67 m Arm	3.20 m Arm
	Backhoe	Backhoe
Item	mm	mm
A : Maximum Digging Reach	10680	11220
B : Maximum Digging Depth	6360*1	6900*1
C : Maximum Cutting Height	12060*1	12550*1
D : Maximum Dumping Height	8750*1	9230*1
E : Overall Height	3370	3310
F : Overall Length	11330	11290
G : Minimum Swing Radius	3130	2910

*1 The dimensions do not include the height of the shoe lug.

Shoe Types and Applications ZX350LC-7 2-piece Boom

Shoe Width		600 mm Grouser Shoe	700 mm Grouser Shoe	800 mm Grouser Shoe	900 mm Grouser Shoe	600 mm Double Grouser Shoe
Application		For Ordinary Ground	For Weak Footing	For Weak Footing	For Weak Footing	For Ordinary Ground
Operating Weight	kg	36300	36700	37100	37500	36900
Base Machine Weight	kg	27300	27700	28100	28400	27900
Counterweight Weight	kg	7600	7600	7600	7600	7600
Cab Height	mm	3150	3150	3150	3150	3150
Minimum Ground Clearance	mm	500*1	500*1	500*1	500*1	500*1
Undercarriage Length	mm	4970	4970	4970	4970	4970
Undercarriage Width	mm	3190	3290	3390	3490	3190
Ground Pressure	kPa	67.9	58.8	52.0	46.7	68.9

*1 The dimensions do not include the height of the shoe lug.

NOTE

- *The specifications for the front-end attachment are for 3.2 m arm with PCSA 1.4 m^3 bucket.*
- *700, 800, 900 mm grouser shoe should not be used on gravel or rocky ground.*

Shoe Types and Applications ZX350LCN-7 2-piece Boom

Shoe Width		600 mm Grouser Shoe	700 mm Grouser Shoe	600 mm Double Grouser Shoe
Application		For Ordinary Ground	For Weak Footing	For Ordinary Ground
Operating Weight	kg	36200	36600	36800
Base Machine Weight	kg	27200	27600	27800
Counterweight Weight	kg	7600	7600	7600
Cab Height	mm	3150	3150	3150
Minimum Ground Clearance	mm	500*1	500*1	500*1
Undercarriage Length	mm	4970	4970	4970
Undercarriage Width	mm	2990	3090	2990
Ground Pressure	kPa	67.7	58.7	68.8

*1 The dimensions do not include the height of the shoe lug.

NOTE

- *The specifications for the front-end attachment are for 3.2 m arm with PCSA 1.4 m^3 bucket.*
- *700 mm grouser shoe should not be used on gravel or rocky ground.*

Attachment Pedal

Attachment Pedal (Hydraulic Breaker) (Optional)

The breaker can be operated using attachment pedal (1) located on the right front of the seat, as illustrated.

CAUTION

Be sure to lock attachment pedal (1) with pedal lock (2) when attachment pedal (1) is not in use. Do not allow your foot to rest on pedal (1) when attachment pedal (1) is not in use. When changing the position of pedal lock (2), set the pilot shut-off lever up to the LOCK position.

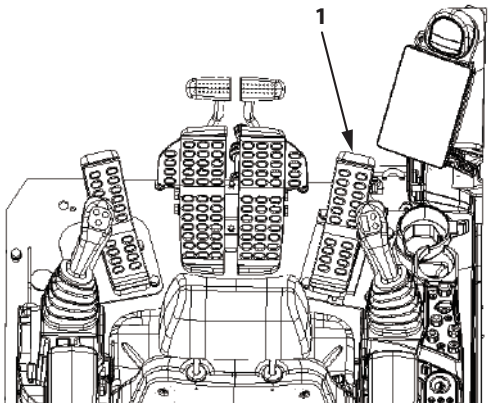

MDFY-13-006-2 ja

1. Select the hydraulic breaker icon on monitor Attachment mode screen (3). (Refer to chapter-5 "Attachment Selection".)

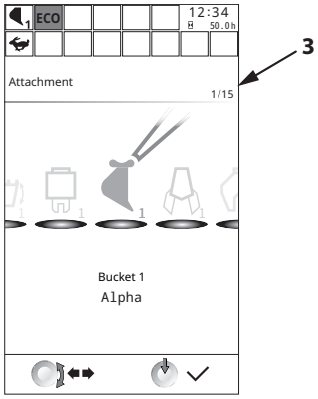

MDFY-MT-043-2 en_GB

2. Move pedal lock (2) forward to the UNLOCK position.
3. Push down on attachment pedal (1) to operate the breaker.
   Loosen stopper bolt (4) until stopper bolt (4) comes in contact with the bracket in attachment pedal (1) neutral to prevent attachment pedal (1) from being stepped backward.
4. Remove foot from attachment pedal (1) to stop the breaker.
5. Always keep attachment pedal (1) locked with pedal lock (2) when attachment pedal (1) is not in use.

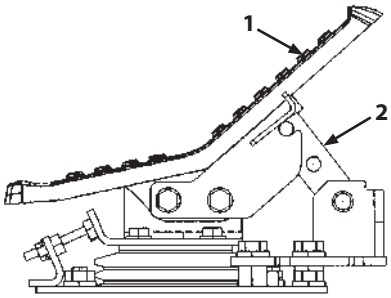

Locked Attachment Pedal

M1J1-13-002-2 ja

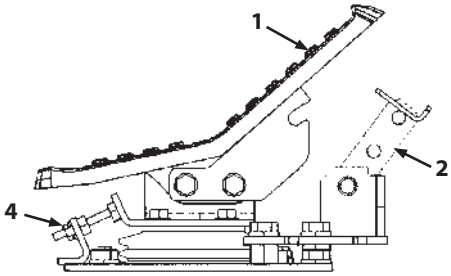

Unlocked Attachment Pedal

M1J1-13-003-2 ja

Attachment Pedal (Hydraulic Crusher) (Optional)

The crusher can be operated using attachment pedal (1) located on the right front of the seat, as illustrated.

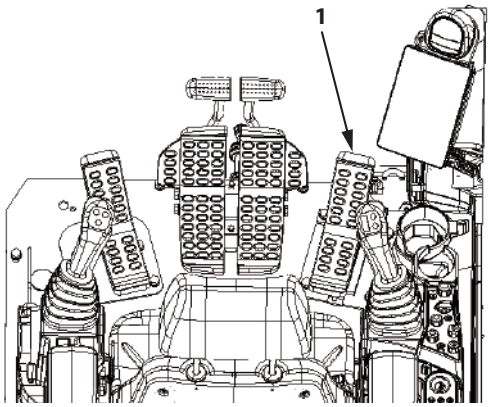

MDFY-13-006-2 ja

CAUTION

Be sure to lock attachment pedal (1) with pedal lock (2) when attachment pedal (1) is not in use. Do not allow your foot to rest on pedal (1) when attachment pedal (1) is not in use. When changing the position of pedal lock (2) set the pilot shut-off lever up to the LOCK position.

1. Select the proper hydraulic crusher icon on Attachment mode screen (3). (Refer to chapter-5 "Attachment Selection".)

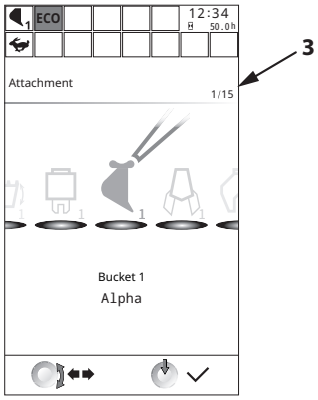

MDFY-MT-043-2 en_GB

2. Move pedal lock (2) forward to the UNLOCK position.
3. Push down on attachment pedal (1) either forward or backward to open or close the crusher.
4. Remove foot from attachment pedal (1) to stop the crusher.
5. Always keep attachment pedal (1) locked with pedal lock (2) when attachment pedal (1) is not in use.

IMPORTANT

Tighten as far as the stopper bolt (A) position.

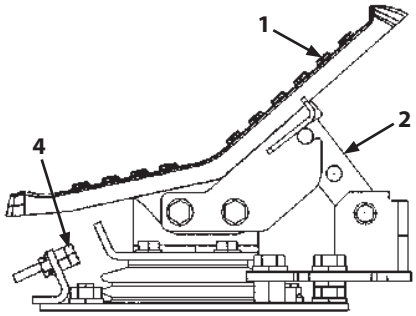

Locked Attachment pedal (Crusher)

M1J1-13-012-3 ja

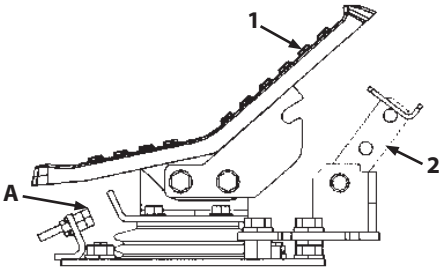

Unlocked Attachment pedal (Crusher)

M1J1-13-006-2 ja

Hydraulic Breaker, Crusher, Quick Coupler

Selection of Hydraulic Breaker, Crusher, Quick Coupler

When mounting a hydraulic breaker, crusher or quick coupler on the hydraulic shovel, it is necessary to consider the stability of the base machine, as well as requirements of the breaker, crusher or quick coupler, such as oil pressure and amount.

When selecting a hydraulic breaker, crusher or quick coupler contact your authorized dealer.

Warnings about Use

When using a hydraulic breaker, crusher or quick coupler, do so according to the instruction manual "Hydraulic Breakers, Crushers and Quick Couplers."

Follow the precautions to avoid damage to the body of the machine or to the breaker, crusher or quick coupler.

When the hydraulic breaker, crusher or quick coupler is changed, make sure there is no risk related to the field of vision.

Precautions for Hydraulic Breaker, Crusher, Quick Coupler Lines

IMPORTANT

Take care not to snag on pipes and parts be mounted on the arm, when detaching of hydraulic breaker , crusher or quick coupler and attaching of other attachment.

Take care when connecting/disconnecting the hoses of hydraulic breaker, crusher or quick coupler to the pipes at the end of the arm so no dirt or debris gets on or inside hoses or pipes.

When a hydraulic breaker, crusher or quick coupler is not attached to the machine, always put a cap or plug on the ends of the pipes at the end of arms and the ends of hoses of the breaker, crusher or quick coupler, to avoid dirt/debris from getting on or in them.

Always keep spare caps and plugs in the tool box, so they will not be lost.

Prior to starting work, check for looseness of bolts on the clamps holding pipes and for oil leaks from connections of pipes and hoses.

Piping for Breaker and Crusher

- Layout of Stop and Selection Valves

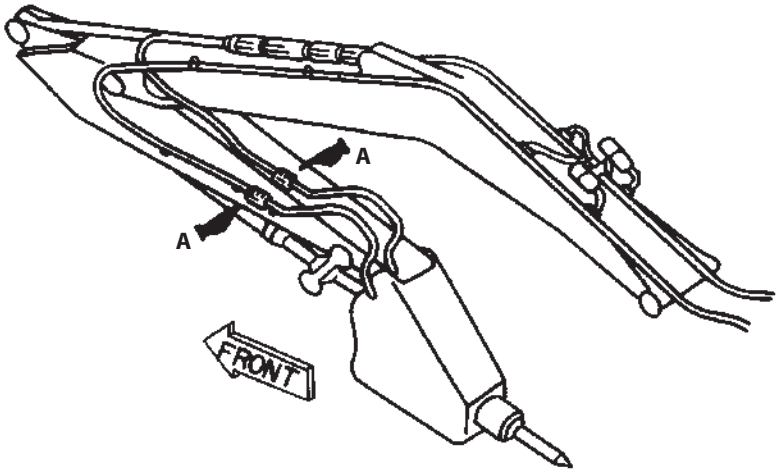

MDFY-13-001-1 ja

Stop Valve A		
Valve Operation	Closed	Open
Description	When mounting/removing attachments or when not in use	When using an attachment

- Image of Hydraulic Circuit

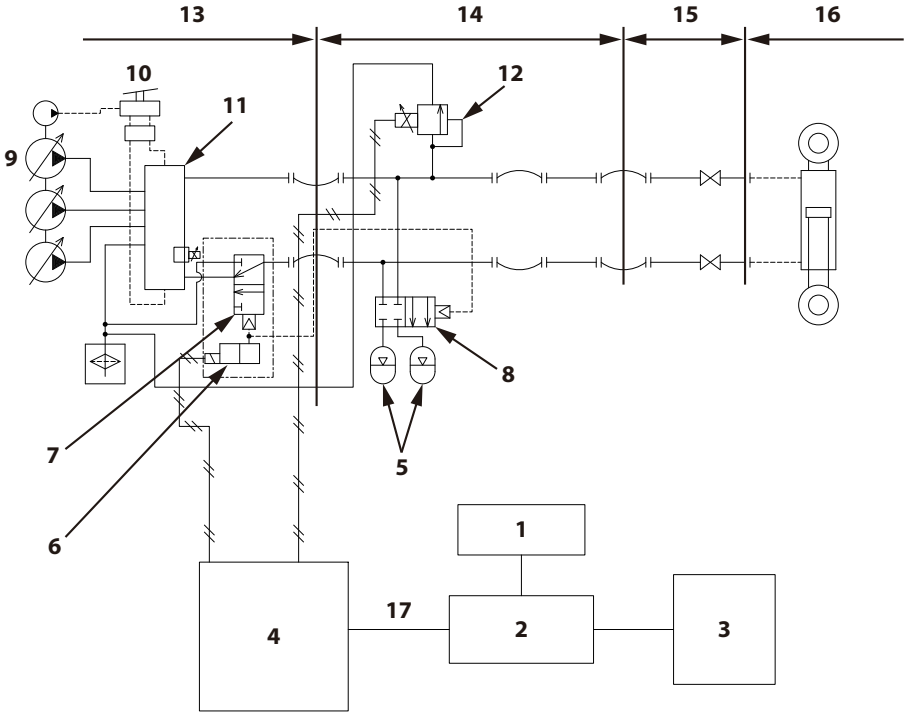

MDFY-13-030-1 ja

1	Monitor	6	Solenoid valve	11	Control valve	16	Attachments
2	Monitor controller	7	Selector valve	12	Breaker relief valve	17	CAN
3	Switch box	8	Accumulator stop valve	13	Base Machine		
4	Main controller	9	Pump	14	Boom		
5	Accumulator	10	Control pedal	15	Arm		

Breaker Valve Relief Pressure Adjustment

Depending on the breaker, the relief pressure settings for the solenoid valve may differ.

If using a breaker, check it's specifications and ask your authorized dealer to make the necessary adjustments.

How to Use Quick Couplers

Quick couplers are controlled with quick coupler switch (1) and the right control lever.

WARNING

Make sure no one can approach the work area when attaching/detaching an attachment.

IMPORTANT

Do not operate the attachment while operating the quick coupler. Hydraulic oil might splash from the quick coupler.

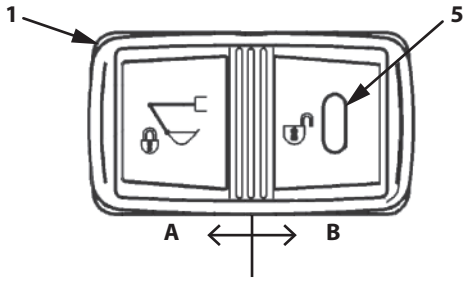

MDFY-01-182-2 ja

A: LOCK
B: UNLOCK

Attaching an Attachment

1. Make sure quick coupler switch (1) is pressed to the Unlock side (B) and the buzzer is sounding.
2. As illustrated at right, align the centers of arm (2) and attachment (3) and move the machine to adjust its position so pin (4) on the attachment cab side and safety hook (5) are in line horizontally.

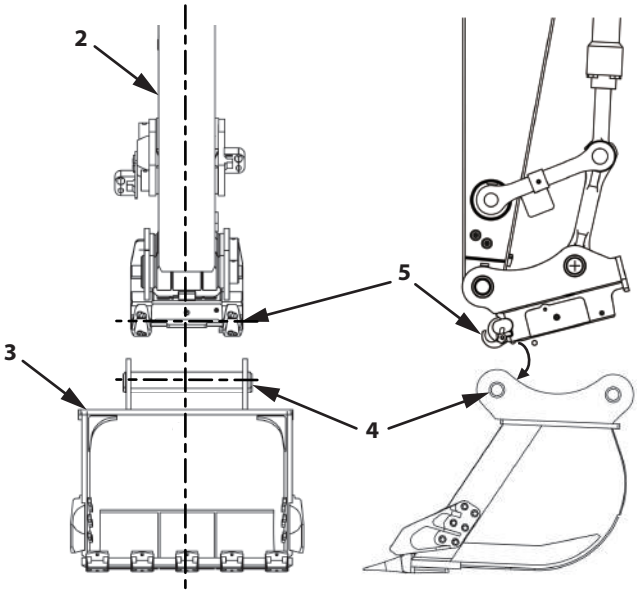

MDFY-13-032-1 ja

3. Insert attachment side pin (4) all the way into safety hook (5).
4. Extend bucket cylinder (7) so quick coupler (6) is fully in contact with attachment (3).
5. Once in contact, press quick coupler switch (1) to the Lock side (A).
6. Perform the bucket roll-in operation and relieve the valve.
7. The lock pin of quick coupler (6) extends, engaging the lock and completing the connection.

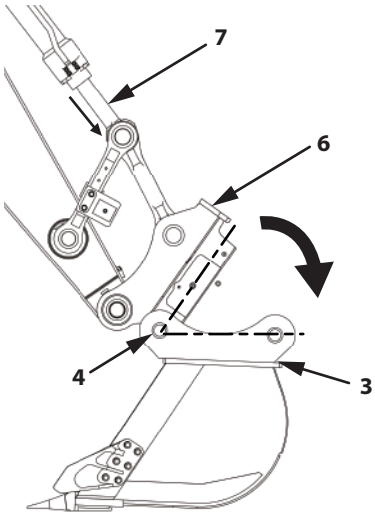

MDFY-13-033-1 ja

Detaching an Attachment

1. Lower the attachment to the ground.
2. While pressing interlock (8) of quick coupler switch (1), press it to the UNLOCK side (B).
   The buzzer sounds and warning lamp (9) of quick coupler switch (1) lights.
3. Perform the bucket roll-in operation and relieve the valve.
4. The lock pin of quick coupler (6) contracts, unlocking it.

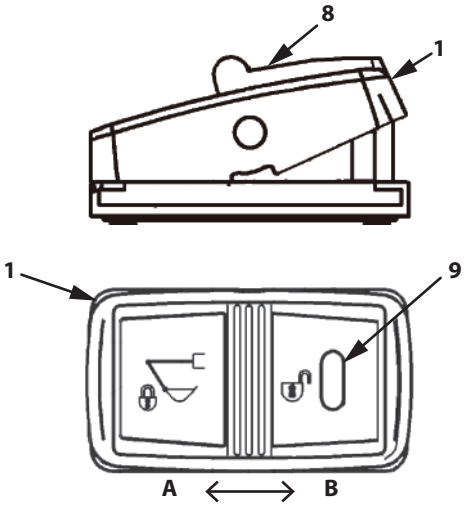

MDFY-13-034-1 ja

A: LOCK

B: UNLOCK

5. Retract bucket cylinder (7).
6. Separate the safety hook from attachment pin (4). Press quick coupler switch (1) to the LOCK side when done. The buzzer stops.

   NOTE

   For information on using the quick coupler correctly, consult your authorized dealer.

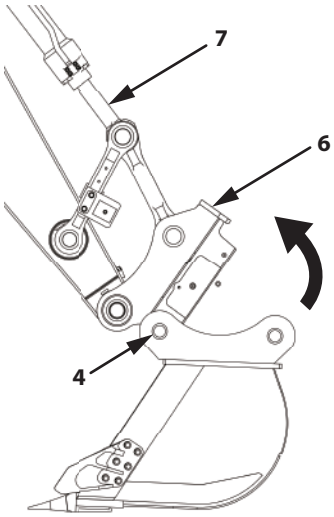

MDFY-13-033-2 ja

- Image of Hydraulic Circuit

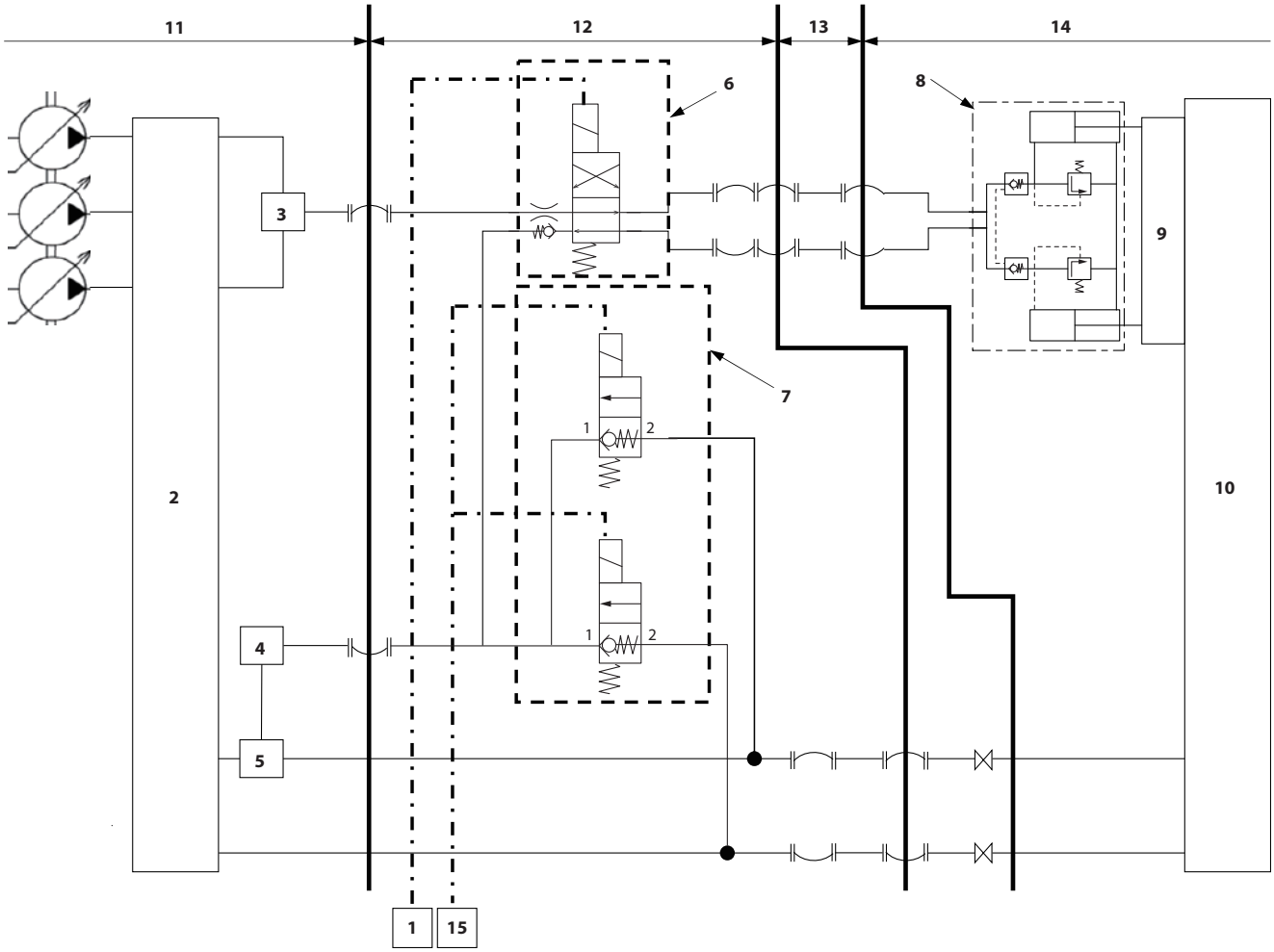

MDFY-13-031-1 ja

1-	Quick Coupler Switch	5-	Selector valve	9-	Adapter	13-	Arm
2-	Control Valve	6-	Open/Close Valve	10-	Attachment	14-	Attachment
3-	Shuttle Valve	7-	Pressure Relief Valve	11-	Base Machine	15-	MCZ
4-	Oil Tank	8-	Quick couplers	12-	Boom		

Precautions for Breaker Operation

WARNING

When working with a hydraulic breaker mounted, the machine becomes less stable because the attachment is heavy; this is the opposite of when using a bucket. Note that it is also extremely dangerous because materials go flying, such as sand and fragments of rock and metal. In addition to safety measures to prevent turning over and to protect from flying debris, follow the precautions below and work safely.

Crashing into Crushed Materials Not Allowed

Hydraulic breakers are heavier than buckets, so they drop faster and require caution for this reason.

If a hydraulic breaker crashes into crushed material, it will damage the front and/or upperstructure of the machine.

MZX5-13-019 ja

Moving Crushed Materials Not Allowed

Do not move crushed materials or the like with the hydraulic breaker.

In particular, do not use swiveling force to move crushed materials. Doing so may cause damage to the boom and/or arm, as well as the hydraulic breaker.

MZX5-13-020 ja

Never Strike with Cylinder at its Stroke End

Leave at least 100 mm of room at the end of the stroke of the machine's cylinders when striking with it.

Striking with cylinders at the end of their stroke will cause damage to the cylinders, arm and/or boom.

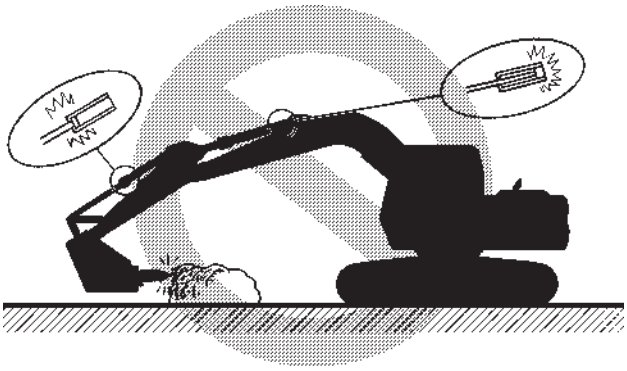

MZX5-13-021 ja

Never use in Water

Doing so causes rust on the hydraulic breaker and damage to the seals.

As such, rust, debris and water may get into the hydraulic oil, which will cause damage to the machine's hydraulic equipment.

MZX5-13-017-2 ja

Never use for Sling Loads

Using a hydraulic breaker for sling loading is prohibited.

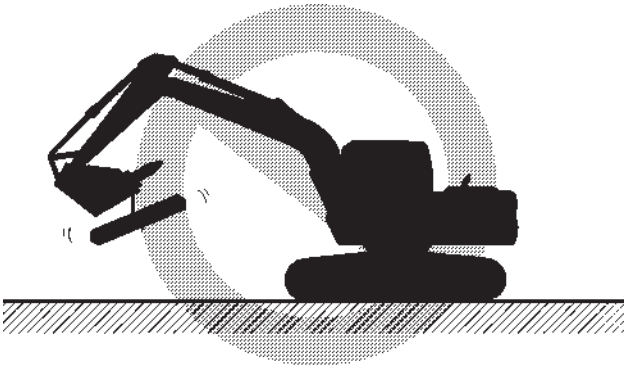

MZX5-13-022 ja

Use while Facing Side of Machine Prohibited

Do not do any work while facing the side of the machine. Doing so may cause the machine to tip over and decreases the life of the undercarriage.

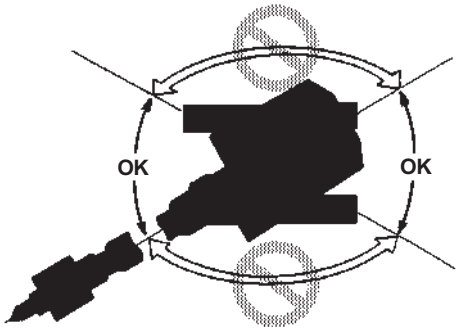

MZX5-13-023-1 en_GB

Operate the chisel carefully to avoid hitting the machine.

Be careful when crowding the hydraulic breaker as its chisel may hit the boom.

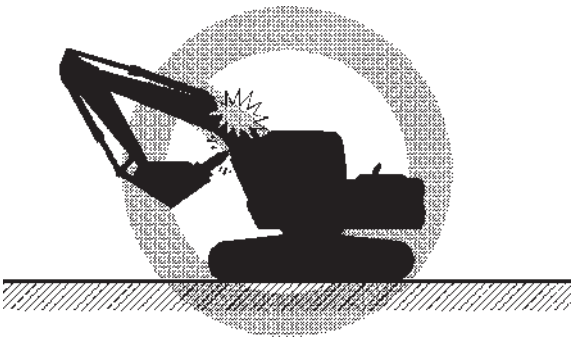

Warning about Touching the Boom

MZX5-13-024-2 ja

Never Operate Breakers with Arm in Vertical Attitude

This causes vibration to the arm cylinder and causes oil leaks.

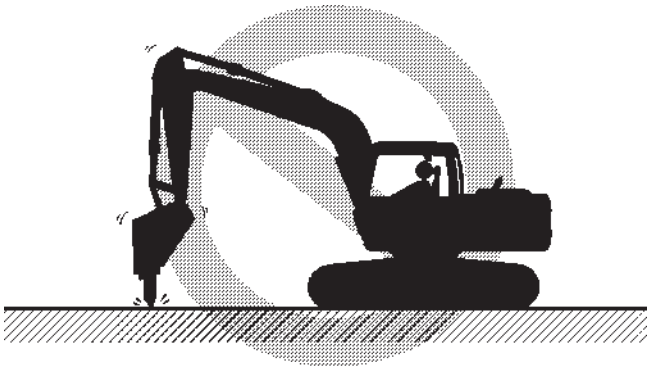

MZX5-13-006 ja

Align the Direction of Pressing the Hydraulic Breaker with the Direction of Penetration of the Chisel (Axially)

Failure to do so causes damage to the chisel and/or scoring of pistons.

MZX5-13-007 ja

Do not operate the breaker continuously for longer than one minute.

Pounding too long causes abnormal wear of the chisel.

If a rock does not break, change the point where the chisel is making contact.

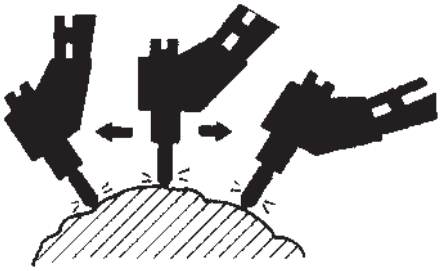

M147-05-015-2 ja

IMPORTANT

If use of the breaker is continued for longer than one minute, a diagonal line will be displayed in operation mode display portion (1) of the monitor screen and a buzzer will sound. If this occurs, stop work immediately, wait for a short time and then start work again.

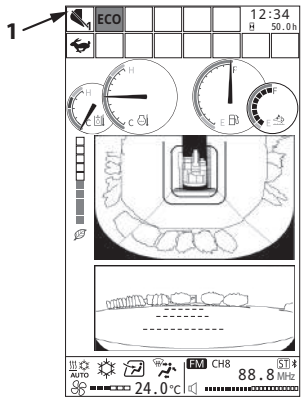

MDFY-MT-136-1 ja

Raising the Front Part of the Undercarriage by Pressing Down the Breaker May Cause Damage to the Front Attachment

Never raise the front edge (A) of the undercarriage higher than 150 mm (6 in) by pressing the breaker down.

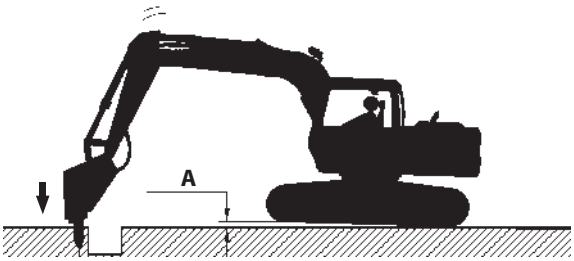

M147-05-016-3 ja

Machine storing position with breaker

After operating the machine, be sure to place the breaker horizontally on the ground. Do not leave cylinders at their stroke end position. Failure to do so may damage the cylinder.

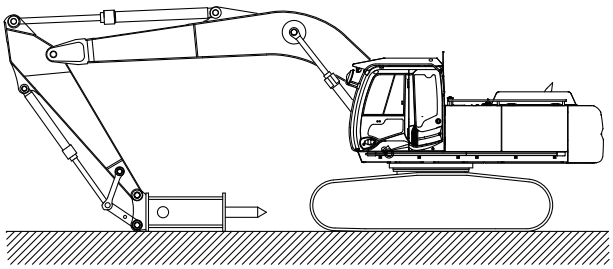

MJAD-05-001 ja

Change Hydraulic Oil and Replace Full-Flow Filter Element

Hydraulic breaker operation results in faster contamination of the hydraulic system, and faster deterioration of hydraulic oil.

Failure to comply with proper maintenance intervals may result in damage to the base machine and the breaker.

Change the hydraulic oil and the full-flow filter element in order to extend the service life particularly of the hydraulic pump. (Refer to the section "Hydraulic System" in the "MAINTENANCE" chapter.)

Change intervals differ depending on the brand of hydraulic oil used. Refer to the "Hydraulic System" in the "MAINTENANCE" chapter.

NOTE

Hydraulic oil filter restriction alam indicator is optional. If a filter-paper element is used, this indicator does not operate. (Refer to the section "Hydraulic System" in the "MAINTENANCE" chapter.)

Precautions for Crusher Operation

Heed the following points to avoid damage to the front-end and to prevent the machine from tipping over.

WARNING

When working with a crusher mounted, the machine becomes less stable because the attachment is heavy; this is the opposite of when using a bucket. It is extremely hazardous due to crushed material falling and scattering and the potential to tip over. In addition to normal safety measures, follow the precautions below and work safely.

- Do not lift the machine when the bucket cylinder is in its fully extended or retracted positions. Doing so may damage the parts of the front. The bucket cylinder is particularly susceptible to damage when fully extended.
  Be particularly careful during work like demolition of foundations with a crusher.
- Do not lift the machine when the arm cylinder is fully extended. Doing so will damage the arm cylinder.
- Do not make abrupt start or stop operations with the front-end when a heavy attachment like a crusher is mounted on it. Doing so may damage the parts of the front.
- Work in the forward/reverse direction of the tracks. Working lateral to the track makes the machine unstable and may cause it to tip over.

MZX5-13-008 ja

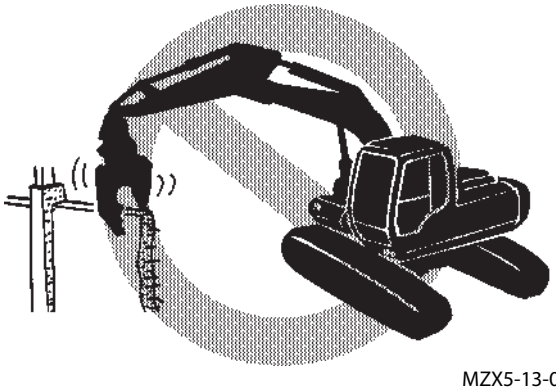

MZX5-13-009 ja

- Be careful when crowding the crusher as it may hit the boom.

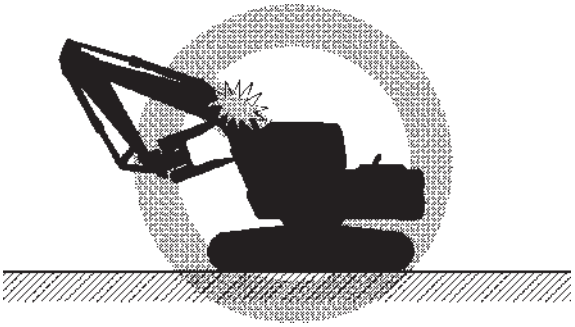

Warning about Touching the Boom or Cab

MZX5-13-010-2 ja

- When crushing high places, such as a ceiling, take care that crushed material does not fall on the machine.

MZX5-13-011 ja

- Before working on the floor of a building, check and make sure it is strong enough.
  Some working methods result in a greater load on the floor than the machine's own weight.
- Keep the body horizontal and stabilize its footing while working. Do not drive onto glass or work on a slope.
- Do not use the crusher to move or load crushed materials.
- Hydraulic oil tends to get contaminated when changing attachments, such as crusher and bucket, or hydraulic breaker and another attachment. Change the hydraulic oil and full-flow filter element at the same frequency (hours) as the hydraulic breaker.

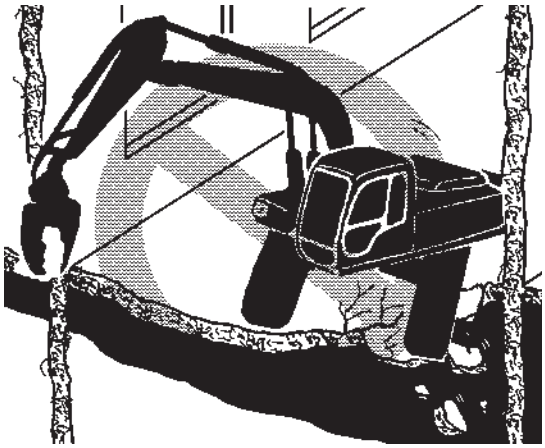

MZX5-13-012 ja

- Remove the crusher from the machine during transport. Do not leave the bucket cylinder fully extended during transport. (Vibration during transport causes the same conditions as the posture when lifting the machine, which damages the front.)

Never Use a Hydraulic-Driven Attachment (Breaker, Crusher, etc.) for Slinging Work

Before doing slinging work, detach the hydraulic-driven attachment (breaker, crusher, etc.).

The attachment may operate suddenly during slinging work, resulting in personal injury.

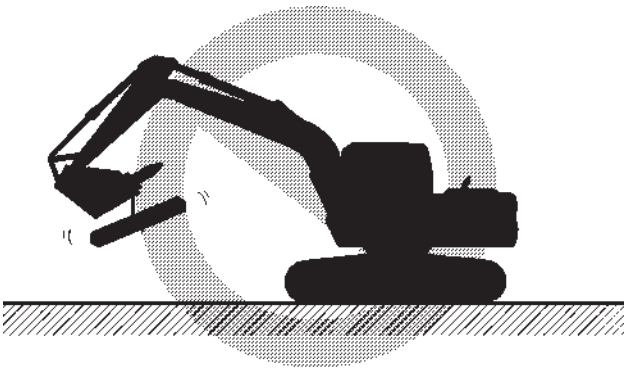

MZX5-13-022 ja

Attachment

Allowable Weight Limits of Installed Attachment

WARNING

- **Before installing attachments such as hydraulic breaker, crusher (concrete crusher), or pulverizer, and quick coupler, take machine controllability into account when selecting the weight of the attachment by referring to the table below.**
- **When an attachment other than the standard bucket is installed on the machine, the machine stability will be different.**
  If a heavy attachment is used, not only will controllability be affected but also machine stability will be reduced, possibly causing safety hazard.
- **According to the specifications of installed attachment and the base machine, the machine weight may exceed the allowable maximum operating weight of the ROPS, making the ROPS unable to assure the protective function for operator. Refer to the ROPS certification affixed in the cab for the allowable maximum operating weight.**

(Unit: kg)

Specification	Base Machine		Breaker		Crusher/Pulverizer	
	Model	Arm	Std.Weight	Max.Weight	Std.Weight	Max.Weight
Std. Model	ZX130-7, 130LCN-7	Std.	1000	1150	1250	1450
	ZX160LC-7	Std.	1250	1350	1500	1750
	ZX180LC-7	Std.	1400	1550	1700	2000
	ZX180LCN-7	Std.	1300	1450	1600	1850
	ZX210LCN-7, 240N-7	Std.	1550	1750	1900	2200
	ZX210LC-7	Std.	1750	1950	2100	2450
	ZX250LCN-7	Std.	1950	2150	2350	2700
	ZX250LC-7	Std.	2150	2400	2600	3050
	ZX300LCN-7	Std.	2350	2600	2850	3300
	ZX300LC-7	Std.	2400	2650	2900	3400
	ZX350LCN-7	Std.	2600	2850	3100	3600
	ZX350LC-7	Std.	2650	2900	3150	3700

- Breaker operation speed is faster than crusher operation, so the recommended maximum weights for breakers are lower than those for crushers.
- Weight is not the only factor to be considered when selecting a breaker. Select manufacturer's breaker models referring to the table on the next page.
- Avoid installing an attachment with a long overall length. Damage to the front attachment may result.
- When an attachment of the maximum weight is installed, always operate the attachment over the front or rear side of the machine. Avoid operating the attachment at maximum reach.
- Crushers are heavier than breakers. Slowly move the control lever when operating a crusher.
- Always contact your authorized dealer before installing attachments of other manufacturers.

Attachment Connections

This describes the connection parts between arm tip pipes and the pipes of each attachment.

When attachments are removed, always put cap (1) or plug (2) on the ends of the arm tip pipe and attachment pipe, to prevent dirt from getting on or in them.

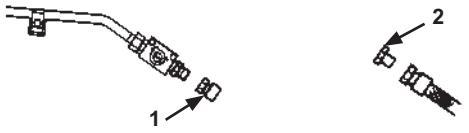

M175-05-005-3 ja

	Bolt Dia	Tightening Torque
G1	JIS B2351 O-type G1	210 N·m (21 kgf·m)
G1-1/4	JIS B2351 O-type G1-1/4	340 N·m (34 kgf·m) (ZX330-7 class, right-side piping only)

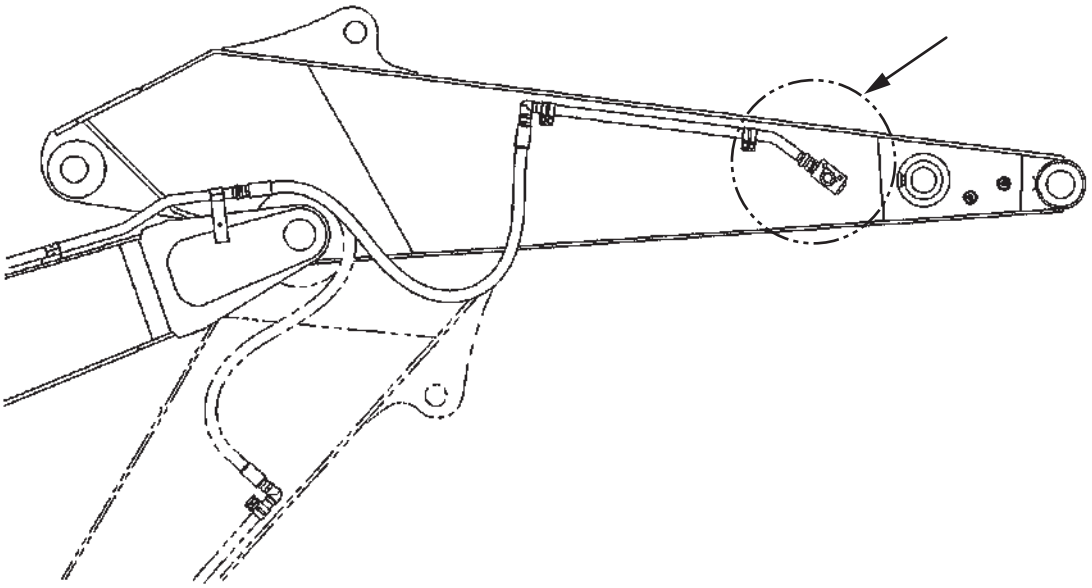

MDFY-13-015-1 ja

Table of Parts Numbers (Put the parts number of the maker of the attachment being used in the empty spaces.)

	Adapter Size	Adapter	Cap	Plug	Hose
Part Shape	G-UNF Male-Type	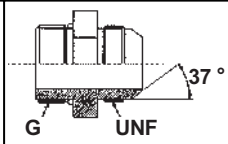	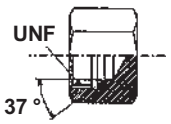	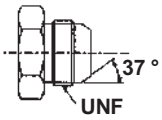	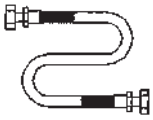
Left-side piping	G1X1-5/16UN	4214444	4222712	4222265	
ZX330-7 class right-side piping	G1-1/4X1-5/16UN	4314094			
Part Shape	G-G30° Female-Type	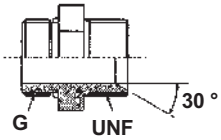	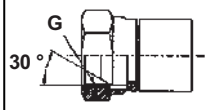	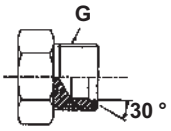	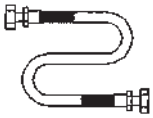
Left-side piping	G1XG1	4042034	9718917	4168177	
ZX330-7 class right-side piping	G1-1/4XG1	4317614			
Part Shape	G-G30° Male-Type	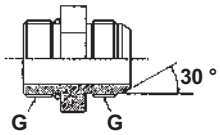	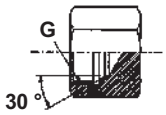	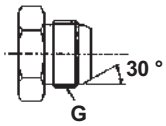	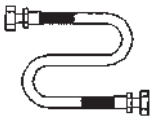
Left-side piping	G1XG1	4456118	4222716	4222045	
ZX330-7 class right-side piping	G1-1/4XG1	4653961			

Precautions when Retracting the Arm and Bucket

When an attachment whose overall length is longer than a standard bucket is attached

WARNING

When an attachment (such as breaker, crusher, quick coupler, etc.) whose overall length is longer than a standard bucket is attached, the attachment may interfere with the cab or boom. Be careful not to hit the cab or boom with the tip of the attachment when retracting the arm.

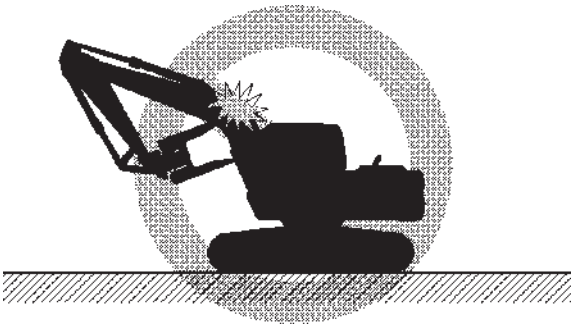

MZX5-13-010-2 ja

Automatic Refueling Device

Operating the Automatic Refueling Device

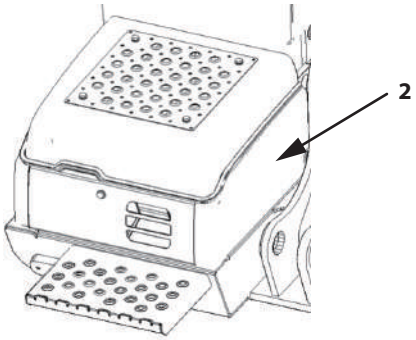

ZX120-7 class

MDFY-13-026-1 ja

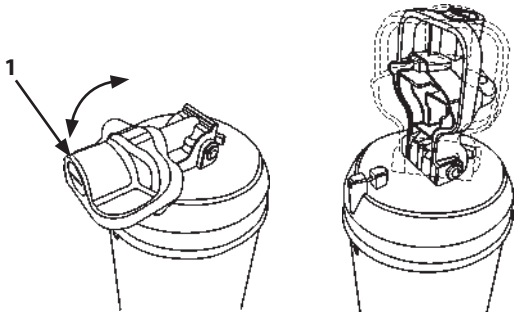

MDFY-13-007-1 ja

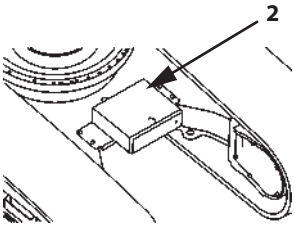

ZX210LCN-7, 240N-7

MDC1-13-018-1 ja

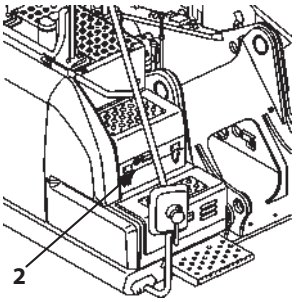

ZX160-7, 180-7, 200-7(except ZX210LCN-7, 240N-7), 240-7, 300-7, 330-7 class

MDFY-13-008-1 ja

1. Stop the engine.

WARNING

CAUTION: Handle fuel carefully. Stop the engine before refueling. Keep flame away from the area when refueling or working on the fuel system.

2. Raise handle (1) of the fuel tank cap upright.

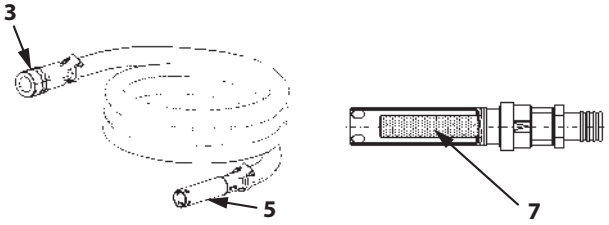

MDFY-13-002-1 ja

IMPORTANT

- **Raising the handle upright releases the pressure inside the tank. Failure to raise the handle upright makes it difficult to suck fuel in due to the pressure inside the tank. It also shortens the life of the pump and the filter.**

3. Remove the refueling hose stored in tool box (2) on the side of the chassis and attach coupler body (3) to coupler nose (4) on the machine. Insert strainer (5) of the refueling hose into the drum can.
4. Turn pump switch (6) of the automatic refueling device ON and start refueling.

IMPORTANT

- **Do not run the pump for 30 seconds or more without fuel. Lubrication inside the pump may fail and it causes damage to the pump.**
- **If refueling fails after turning pump switch (6) ON, check whether the switch box fuse (10A) is blown. If blown, replace it with a new fuse.**
- **If suction is poor during refueling, clean filter (7) of strainer (5) of the refueling hose with fuel.**
- **If suction is poor during refueling, check the needle of the indicator (8) to see if the filter is clogged. If the needle indicates 0.1 MPa or higher during refueling, replace the filter.**

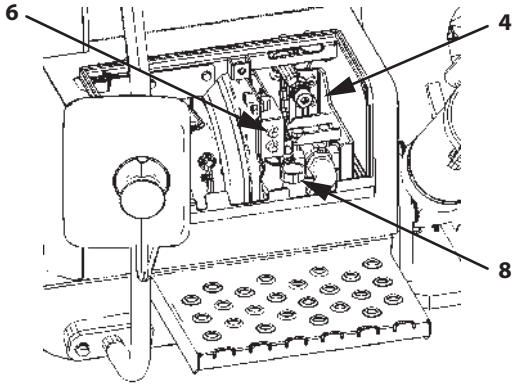

ZX160-7, 180-7 class

MDFY-01-168-1 ja

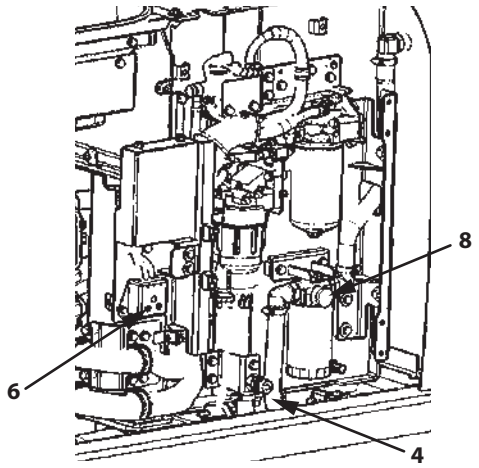

ZX210LCN-7, 240N-7

MDFY-01-177-1 ja

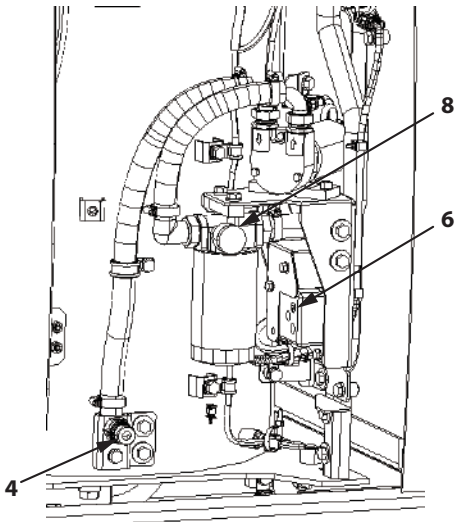

ZX200-7(except ZX210LCN-7, 240N-7), 240-7, 300-7, 330-7 class

MDFY-13-009-1 ja

5. The pump stops automatically when the fuel reaches the specified oil level (95% of tank capacity).
6. Store the refueling hose in the tool box, lower handle (1) of the fuel tank cap and lock it.

IMPORTANT

- **Take care not to contaminate the fuel with water, dirt, etc. during refueling. Thoroughly wipe off any spilled fuel.**

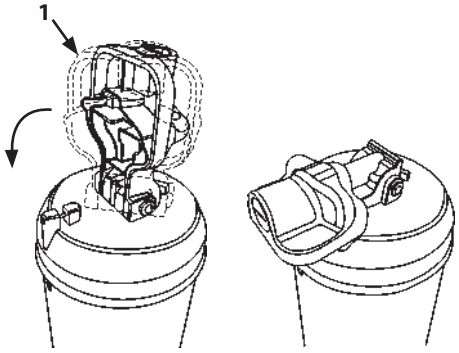

MDFY-13-010-1 ja

Inspection and Maintenance of the Automatic Refueling Device

IMPORTANT

- **If the needle of the indicator (8) points to 0.1 MPa or higher, replace the filter cartridge (9).**

Filter Cartridge Replacement Procedure

1. Stop the engine.
2. Check that the pump switch (6) of the automatic refueling device is OFF.
3. Put the filter wrench (special tool) on the filter cartridge (9) and adjust the belt diameter of the filter wrench.

   NOTE

   - *Adjust the belt diameter via the hole positions in the belt of the filter wrench.*

4. Use the filter wrench (special tool) to turn and remove the filter cartridge (9).
5. Turn a new filter cartridge by hand until it touches the contact surface.
6. From this point, use the filter wrench (special tool) to tighten to 20 N·m.

   ## IMPORTANT

   - **Thoroughly wipe off any spilled fuel.**

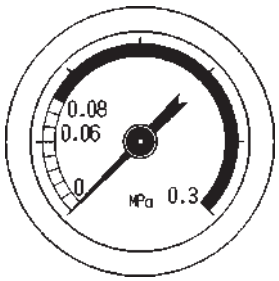

Indicator

MDFY-13-003 ja

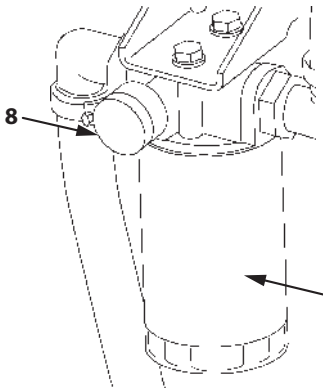

MDFY-13-004-1 ja

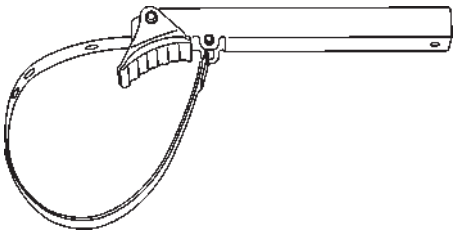

MDFY-13-005 ja

MEMO

INDEX

Symbols

12/24V Power Socket.....1-146
12V Power Socket.....1-146
24V Power Socket.....1-147

A

About Aftertreatment Device.....1-3
Actual Operation.....1-58
Adjust the Operator's Seat.....S-6
Adjusting Console Height.....1-174
Adjusting Operator's Seat and Console.....1-174
Adjusting the Operator's Seat (Air Suspension Type).....1-175
Aerial Angle.....1-180,7-222
Aftertreatment Device.....1-28
Aftertreatment Device Condition Indicator.....1-28
Aftertreatment Device Manual Regeneration Request.....1-29
Aftertreatment Device Regeneration Inhibit.....1-86
Air Conditioner Compressor ON/OFF Switch.....1-104
Air Conditioner ON/OFF.....1-98
Air Conditioner Operation (Monitor).....1-94
Air Conditioner Operation (When Operating with Monitor).....1-97
Air Conditioner Operation (When Operating with Switches).....1-95
Alarm Display and Description of Alarms.....1-20
Alarms Occurrence Screen.....1-20
Allocation to Numeric Keypad (Monitor).....1-120
AM/FM Switching.....1-116
Angle Adjustment of Seat Surface.....1-177
Armrest (Optional).....1-178
as required.....7-160
Attachment Adjustment.....1-36
Attachment Connections.....13-63
Attachment Name Input.....1-88
Attachment Operation.....1-56
Attachment Operation Sensitivity Adjustment (Except ZX160-7, 180-7, 200-7, 240-7, 300-7, 330-7 class).....1-50
Attachment Pedal.....13-46
Attachment Selection.....1-35
Attachment Settings.....5-20
Attachments.....1-35,5-15
Attachments Display (1).....1-17
Audio Operation.....1-107
AUTO Setting.....1-103
Auto Shut-Down.....1-84,5-8
Auto-Idle ON/OFF.....5-7
Auto-Idle Switch.....1-131
Auto-Presetting Stations (AM/FM).....1-118
AUTO/OFF Switch.....1-95
AUX Function Lever 1 (Standard).....1-142
AUX Function Lever 2 (Optional).....1-143
Avoid Accidents from Reversing and Swing Operation.....S-16
Avoid Applying Heat to Lines Containing Flammable Fluids.....S-35
Avoid Heating Near Pressurized Fluid Lines.....S-35
Avoid High-Pressure Fluids.....S-31
Avoid Injury from Attachment Falling Accident.....S-29
Avoid Injury from Rollaway Accidents.....S-15
Avoid Power Lines.....S-20
Avoid Tipping.....S-18
Avoid Undercutting.....S-18

B

Back Switch (Monitor).....1-10
Backrest Adjustment.....1-178
Basic Operation of Multi-Function Monitor.....1-9
Basic Screen (Illustration Content).....1-16
Battery.....7-124
Battery Disconnect Switch.....1-190
Before Starting the Engine.....3-3
Beware of Asbestos and Silica Dust and Other Contamination.....S-36
Beware of Exhaust Fumes.....S-34
Bleed Air from Hydraulic System.....7-74
Bleeding Air from the Fuel System.....7-93
Bluetooth® Connection.....1-126
Boom Raise Speed Priority.....1-42,5-20
Brand Names of Recommended Hydraulic Oil.....7-27
Breaker Operation.....1-55
Breaker Valve Relief Pressure Adjustment.....13-50
Brightness Adjustment Procedure.....1-73
Bucket Types and Applications ZX120-7 class.....12-6
Bucket Types and Applications ZX160LC-7.....12-13
Bucket Types and Applications ZX180LC-7, 180LCN-7.....12-14
Bucket Types and Applications ZX200-7 class.....12-23
Bucket Types and Applications ZX250LC-7, 250LCN-7.....12-30
Bucket Types and Applications ZX300LC-7, 300LCN-7.....12-37
Bucket Types and Applications ZX350LC-7, 350LCN-7.....12-44

C

Cab Door Release Lever.... 1-162
Camera Direction Guide Icons.... 1-185
Caution with an Overhead Obstacle.... S-20
Change Coolant.... 7-114
Change Engine Oil.... 7-52
Change Hydraulic Oil.... 7-72
Check Aftertreatment Device and Related Sensors and Actuators.... 7-174
Check Air Conditioner.... 7-169
Check and Adjust V-belt Tension.... 7-112
Check and Clean EGR Valve.... 7-173
Check and Clean Injector.... 7-174
Check Camera Images Used to Compose the Aerial Angle.... 7-223
Check ECM and Related Sensors and Actuators. 7-174
Check for Oil Leaks:.... S-32
Check for Short circuits:.... S-32
Check Gas Damper.... 7-174
Check Heat Shields:.... S-33
Check Hydraulic Oil Level.... 7-71
Check Key Switch:.... S-33
Check Reed Valve.... 7-174
Check Starter and Alternator.... 7-173
Check the Blowby Hose.... 7-58
Check Turbo Charger.... 7-173
Check Windshield Washer Fluid Level.... 7-160
Check, Clean and/or Replace Filter of Aftertreatment Device.... 7-208
Choosing Tracks with Bluetooth®.... 1-128
Circulating/Fresh Air Control Switch.... 1-96
Circulation Air Mode.... 1-100
Clean Air Conditioner Condenser.... 7-122
Clean and Replace Air Conditioner Filter.... 7-166
Clean Cab Floor.... 7-172
Clean Drink Holder.... 7-153
Clean Filler Port Strainer.... 7-217
Clean Fuel Oil Cooler.... 7-122
Clean Mobile Phone (Smartphone) Holder.... 7-152
Clean Oil Cooler, Radiator and Intercooler Front Screens.... 7-121
Clean Radiator, Oil Cooler and Intercooler Core. 7-117
Clean Rain Visor.... 7-158
Clean Storage Pocket.... 7-154
Clean up Flammable Materials:.... S-33
Clock (2).... 1-18
Confirm Direction of Machine Travel.... S-12
Console and Seat Fore-aft Adjustment (Optional).... 1-175
Control Lever.... 1-142
Control Lever (ISO Pattern).... 5-1
Control Lever Auto-Lock.... 1-151
Coolant Temperature Gauge.... 1-19
Cooling System.... 7-107
Correct Maintenance and Inspection Procedures... 7-1

D

Daily Check of Camera Images used to Compose the Aerial Angle.... 7-222
Date and Time.... 1-68
Date Setting Procedure.... 1-70
DEF Gauge.... 1-19
DEF Level Alarm.... 1-19
Designated Fuel.... 7-87
Dig with Caution.... S-19
Dimensions ZX120-7 class.... 12-2
Dimensions ZX160-7, 180-7 class.... 12-8
Dimensions ZX210LC-7.... 12-17
Dimensions ZX210LCN-7,240N-7.... 12-18
Dimensions ZX250LC-7,250LCN-7.... 12-26
Dimensions ZX300LC-7,300LCN-7.... 12-33
Dimensions ZX350LC-7,350LCN-7.... 12-40
Discrepancies between Image and Actual Road Surface.... 1-186
Display.... 1-67
Display Language List.... 1-76
Display of Other Errors.... 1-27
Displaying the Basic Screen.... 1-11
Dispose of Waste Properly.... S-38
Drain Fuel Tank Sump.... 7-90
Drink Holders.... 1-154
Drive Machine Safely.... S-13

E

Eco Gauge.... 1-81
EGR Cooler Cleaning.... 7-173
Electrical Main Switch.... 1-141
Emergency Exit.... 1-189
Engine Auto-Stop at Extremely Low Temperatures.... 3-16
Engine Control Dial.... 1-131
Engine Output Restriction Suspend.... 1-33
Engine Speed Control.... 5-5
Engine Stop Switch.... 1-153
Ensure Safety Before Rising from or Leaving Operator's Seat.... S-6
Evacuating in Case of Fire.... S-34
Explanation of Displayed Items.... 1-111
Extending the Password Duration Time.... 1-13

F

Facilities in Operator's Station..... 1-146
Fan Level.....1-101
Fan Switch..... 1-96
Fasten Your Seat Belt.....S-6
Fastening the Machine for Transport.....6-5
Follow Safety Instructions.....S-2
For Rapid Cooling.....1-105
Fore-Aft Adjustment of Seat Surface..... 1-177
Front Speed Adjustment for Heavy Load.....5-20
Front Speed Adjustment for Heavy Load (ECO) (PWR)(H/P).....1-48
Fuel Consumption..... 1-54
Fuel Gauge..... 1-18
Fuel System.....7-87
Fuse Box.....1-155

G

Gear Oil in Travel Device..... 7-67
General Precautions for the Cab.....S-5
Getting ON and OFF the Machine.....1-2
Going Forwards and Backwards through DAB Channels.....1-125
Grease Cab Door Hinge.....7-158
Grease Console Height Adjustment Pin.....7-159

H

Handle Chemical Products Safely..... S-38
Handle Fluids Safely–Avoid Fires.....S-24
Handling the Cab Door and Window.....1-162
Home Switch (Monitor)..... 1-10
Horn Switch.....1-144
Hour Meter (1).....1-18
How to Lower Boom in Case of Emergency and When Engine Stops (Without hose-rupture safety valve).....5-28
How to Lower Front Equipment and Attachment in Case of Emergency and When Engine Stops (With hose-rupture safety valve) 5-30
How to Use Quick Couplers.....13-51
Hydraulic Oil Temperature..... 1-82
Hydraulic System..... 7-69

I

Image to Left Side + Image to Right Side + Image to Rear..... 1-185
Image to Right Side + Image to Rear..... 1-185
Information..... 1-52
Input Password..... 1-12
Inspect and Adjust Valve Clearance..... 7-173
Inspect Machine..... S-4
Inspect Machine Daily Before Starting..... 1-66,3-1
Inspect V-belt.....7-111
Inspection and Maintenance Intervals.....7-4
Install OPG Guard.....S-11
Installation and Adjustment of Mirrors..... 1-187
Installing a Fire Extinguisher (Optional).....1-161
Intended Use.....1

J

Jump Starting..... S-8

K

Keep People Clear from Working Area.....S-17
Keep Riders off Machine.....S-8
Key Switch.....1-136

L

Language Setting Procedure.....1-75
Layout.....7-3
Layout of Equipment in Operator's Station (Illustration Contents).....1-5
Lifting the Machine..... 6-7

M

Magazine Rack.....1-153
Main Menu Display..... 1-15
Maintenance.....1-59
Maintenance Guide Table..... 7-4
Maintenance Notice.....1-60
Manual Regeneration Procedure..... 1-30
Measure Engine Compression Pressure.....7-173
Meter..... 1-79
Mirror Installation Locations..... 1-188
Mode Switch.....1-95
Monitor Display.....1-110
Monitoring..... 1-65
Move and Operate Machine Safely.....S-7
Multi Function Monitor..... 1-7

N

name of components.....1-93
Name of Components..... 1-1
Name of Components and Control Guide (Switches).....1-108
Net-Use Hook.....1-153
Never Move an Object Sideways with the Bucket 5-25

Never Position the Bucket Over Anyone..... S-17
Never Ride Attachment..... S-39
Never Undercut a High Bank..... S-19
Never use Wide Track Shoes on Rough Ground.... 5-26
Notes on Aftertreatment Device..... S-39
Notes on Protection by Operator's Station when the Machine Rolls Over..... S-41
Numeric Keypad.....1-10
Numeric Keypad Allocation (Switches)..... 1-109

O

Object Handling.....S-21
Off-Season Air Conditioner Maintenance..... 1-106
Open and Closing the Ceiling Sunshade..... 1-170
Opening and Closing the OPG Front Guard (Optional).....1-172
Opening and Closing the OPG Head Guard (Optional).....1-173
Opening and Closing the Overhead Window (Clear Hatch)..... 1-171
Opening and Closing the Roll Screen (for Front and Right Windows) (Optional).....1-167
Opening and Closing the Roll Screen (for Rear Window) (Option)..... 1-170
Opening and Closing Upper Front Window.....1-163
Opening Side Window..... 1-166
Opening/Closing and Removing Cab Inside Window.....1-163
Operating Backhoe..... 5-21
Operating in Water or Mud.....4-7
Operating the Audio System from the Multi-Monitor..... 1-112
Operation Information.....1-53
Overload Alarm Switch (Optional)..... 1-140

P

Pairing with Bluetooth® Device.....1-126
Park Machine Safely..... S-23
Parking..... 4-8
Parking the Machine on Slopes.....4-8
Password Change (Optional)..... 1-90
PBLI (Push Button Low Idle)..... 1-83
Perform Job Site Risk Assessment Beforehand.....S-10
Perimeter Lights Switch (Optional).....1-139
Periodic Replacement of Parts..... 7-24
Pilot Accumulator Functions..... 5-27
Pilot Shut-off Lever..... 1-150
Pilot Shut-Off lever.....5-2
Piping for Breaker and Crusher (Demolition Machine) (Std Machine Option).....13-49
Power Boost Switch..... 1-144,5-18
Power Mode.....5-19
Power Mode Switch.....1-132
Practice Maintenance Safely.....S-26
Precautions for After Operations..... 5-31
Precautions for Communication Terminal.....S-39
Precautions for Communication Terminal Equipment S-40
Precautions for Crusher Operation..... 13-60
Precautions for Handling Accumulator and Gas Damper.....S-36
Precautions for Lightning..... S-21
Precautions for Operations.....S-9
Precautions for Welding and Grinding.....S-35
Precautions when Retracting the Arm and Bucket.....13-65
Preparation for Inspection and Maintenance..... 7-8
Prepare for Emergencies.....S-3
Prevent Battery Explosions.....S-37
Prevent Burns..... S-30
Prevent Fires..... S-32
Prevent Parts from Flying.....S-29
Priority (Arm Roll-In)..... 1-38
Priority (Arm Roll-Out) (Except ZX330-7 Class)..... 1-40
Priority (Swing- Arm Roll-Out) (Except ZX200-7, 240-7, 300-7, 330-7 class).....1-44
Priority (Swing-Arm Roll-In)(Except ZX200-7, 240-7, 300-7, 330-7 class).....1-46
Procedure for Setting Display Mode.....1-71
Product Identification Number..... 1
Prohibition of Sudden Control Operations when Traveling at High Speed..... 4-9
Prohibition of Traveling for Long Periods.....4-9
Protect Against Flying Debris and Falling Object. S-22
Protect Against Noise..... S-4
Provide Signals for Jobs Involving Multiple Machines.....S-11
Pump Flow Rate Adjustment.....1-36
Pump Transmission.....7-63

Q

Quick Coupler Switch.....1-140
Quick Wiper..... 1-145

R

Raising One Track Using the Boom and Arm..... 4-5
Rear Light Switch (Optional)..... 1-139
Recognize Safety Information..... S-1
Recommended Engine Oil.....7-25
Recommended Grease..... 7-25

Recommended Oil Viscosity..... 7-28
Recommended Transmission Oil..... 7-26
Reference Information.....7-225
Refueling.....7-88
Remaining Time and Maintenance Interval..... 1-62
Remove Paint Before Welding or Heating..... S-36
Removing and Storing Lower Front Window.....1-165
Replace DEF Tank Water Supply Inlet Filter..... 7-221
Replace Engine Oil Filter.....7-52
Replace Oil Separator Element..... 7-60
Replace Pilot Oil Filter..... 7-79
Replace Rubber Hoses Periodically..... S-31
Replacing the Battery..... 7-128
Restriction of Attachment Installation.....S-11
Retighten Engine Cylinder Head Bolt..... 7-173
Retracting the Arm and Bucket.....5-25,13-66
Retrieval.....4-6
Room Light Switch.....1-149
Rotating Lamp Switch (Optional)..... 1-139

S

Safety Signs.....S-88
Screen Description.....1-183
Seat Belt.....1-179
Seat Heater Switch.....1-138
Seat Height and Angle Adjustment.....1-175
Seat Only Fore-Aft Adjustment..... 1-176
Security Functions (Optional).....1-12
Selecting DAB Channel (by Genre)..... 1-123
Selecting DAB Channel (from Channel List) 1-122
Selecting Stations from Channel List (AM/FM)....1-119
Selecting the Air Vents.....1-99
Selector/Set Switch..... 1-10
Service Air Conditioning System Safely.....S-37
Setting Aftertreatment Device Regeneration Inhibit.....1-86
Settings.....1-78
Shoe Types and Applications ZX130-7.....12-4
Shoe Types and Applications ZX130LCN-7..... 12-5
Shoe Types and Applications ZX160LC-7..... 12-10
Shoe Types and Applications ZX180LC-7..... 12-11
Shoe Types and Applications ZX180LCN-7..... 12-12
Shoe Types and Applications ZX210LC-7..... 12-20
Shoe Types and Applications ZX210LCN-7..... 12-21
Shoe Types and Applications ZX240N-7..... 12-22
Shoe Types and Applications ZX250LC-7..... 12-28
Shoe Types and Applications ZX250LCN-7..... 12-29
Shoe Types and Applications ZX300LC-7..... 12-35
Shoe Types and Applications ZX300LCN-7..... 12-36
Shoe Types and Applications ZX350LC-7..... 12-42
Shoe Types and Applications ZX350LCN-7..... 12-43
Shovel.....5-22
Skylight Wiper/Washer Switch (Optional)..... 1-135
Source Selection and Audio Screen Display.....1-113
Specifications ZX120-7 class.....12-1
Specifications ZX160-7, 180-7 class..... 12-7
Specifications ZX210LC-7.....12-15
Specifications ZX210LCN-7,240N-7..... 12-16
Specifications ZX250LC-7, 250LCN-7..... 12-25
Specifications ZX300LC-7, 300LCN-7..... 12-32
Specifications ZX350LC-7, 350LCN-7..... 12-39
Start the Engine Only from Operator's Seat..... S-7
Stay Clear of Moving Parts.....S-28
Storing the Machine..... 10-1
Sub Meter Selection.....1-79
Summary..... 1-7
Support Machine Properly..... S-28
Surrounding Image..... 1-183
Surrounding Image + Image to Rear.....1-184
Surrounding Image + Image to Right Side + Image to Rear..... 1-184
Suspension Adjustment.....1-176
Swing Reduction Gear..... 7-65
Switch Operation.....1-191
Switch Operation Guide.....1-108
Switch Panel (for Optional Equipments).....1-137
Switch Panel (Illustration Content)..... 1-130
Switches for Multi-Function Monitor Operation.....1-9
Switching the Monitor Display.....1-182

T

Table of Alarm Descriptions.....1-21
Temperature Control.....1-102
Temperature Control Switch.....1-95
Tightening and Retightening Torque of Bolts and Nuts..... 7-175
Time Adjustment Procedure.....1-68
Timing Belt..... 7-62
Timing Belt Cover.....7-62
Tips for Optimal Air Conditioner Usage..... 1-105
Toggling Auto Shut-Down ON/OFF and Changing the Setting Time.....1-85
Tone Control.....1-116
Transport Safely.....S-25
Travel Mode Switch..... 1-131,4-3
Travel Operation.....1-57
Traveling on Soft Ground..... 4-4
Troubleshooting.....1-64
Tuning (AM/FM)..... 1-117

U

Understand Signal Words.....S-1
Unit Setting Procedure..... 1-77
Unloading..... 6-6
Updating DAB Channel List..... 1-121
Urea SCR System.....7-209
Urea SCR System and EGR Device Alarm List.....1-26
USB Power Supply.....1-148
Use Handrail and Steps..... S-5
Using Booster Battery.....3-11
Using DAB..... 1-121
Using the Auto Air Conditioner..... 1-92
Using the Seat Belt.....1-179
Using the Towing Hole on the Track Frame..... 5-26

V

Volume Control..... 1-115

W

Warming-Up Operation..... 5-3
Warn Others of Service Work.....S-27
Wear Protective Clothing.....S-3
When Windows Become Clouded.....1-105
Wide View Wiper Maintenance..... 7-155
Wiper/Washer Switch.....1-133
Work Light Switch..... 1-132
Working Ranges ZX120-7 class.....12-3
Working Ranges ZX160-7, 180-7 class.....12-9
Working Ranges ZX200-7 class..... 12-19
Working Ranges ZX250LC-7, 250LCN-7.....12-27
Working Ranges ZX300LC-7, 300LCN-7.....12-34
Working Ranges ZX350LC-7, 350LCN-7.....12-41

CONFORMITY

EU Declaration of Conformity*

Manufacturer;

Hitachi Construction Machinery (Europe) N.V.

- Amsterdam
  Siciliëweg 5, 1045 AT, Amsterdam, The Netherlands
- Oosterhout
  Souvereinstraat 16, 4903 RH, Oosterhout, The Netherlands

Hitachi Construction Machinery Co.,Ltd.

- Tokyo
  16-1, Higashiueno 2-chome, Taito-ku, Tokyo, Japan
- Tsuchiura
  650 Kandatsu-machi, Tsuchiura-shi, Ibaraki, Japan

Position and address of the person authorised to compile the technical file

General Manager, Engineering
Siciliëweg 5, 1045 AT, Amsterdam, The Netherlands

Legal Provisions;

Herewith we declare that the machine is in conformity with the relevant provisions of:
2006/42/EC Machinery Directive
2014/53/EU Radio Equipment Directive
2000/14/EC Outdoor Noise Directive

Notified body for 2000/14/EC**
TÜV SÜD Industrie Service GmbH
Westendstraße 199, 80686 München
Conformity assessment procedure followed; Annex VI

The EU Declaration of Conformity will lose its validity for any modification of the machine without approval.

*The EU Declaration of Conformity includes the machine without accessory, unless fitted with accessories approved by Hitachi Construction Machinery.
**For the Notified Body applicable to the machine, refer to the EU Declaration of Conformity for individual machine.

Vibration levels

The level of vibrations transmitted from the machine to the operator depends mainly upon the ground conditions on which the operations take place, the mode of operation of the machine and the equipment used. Exposure to vibrations can be considerably reduced when taking into account the following recommendations:

- Select the right type and size of machine. Use equipment and tools compatible with the machine and suitable for the type of work to be done;
- Adjust the seat to the weight and size of the operator and lock the seat in the correct position;
- Inspect regularly the suspension of the seat. Adjust and repair if necessary;
- Perform maintenance of the machine at the prescribed intervals;
- Operate the equipment in a smooth way, preventing, as far as possible, aggressive movements or excessive loads;
- Adapt travelling speed and –route if necessary and avoid, as far as possible, rough terrain or hitting obstacles to prevent bouncing.
- Keep the terrain in good condition. Remove large obstacles and fill any ditched and holes.

This machine is equipped with an operator's seat, limiting the exposure of the operator's body to vibrations in accordance with ISO 7096:2008 when the machine is used as intended. The operator's seat has been tested in accordance with EM6 input spectral class and a SEAT transmissibility factor <0.7.

The average acceleration value to which the operator's arms are subjected does not exceed 2.5 m/s^2.

The average acceleration value to which the operator's body is subjected does not exceed 0.5 m/s^2.

The results were obtained using an accelerometer during excavating operations.

Note:

The vibration exposure values have been determined under particular operating and terrain conditions and therefore may not be representative for all possible operating conditions within the intended use of the machine.
Consequently, this single Whole-Body vibration emission value is not intended to determine the Whole-Body vibration exposure as required by European Directive 2002/44/EC.
For this purpose it is recommended to conduct measurements under actual working conditions. If this is not feasible, information provided in the table below, taken from ISO/TR 25398:2006(*1), to estimate the daily vibration exposure is recommended.
For regular operating activities, use the typical vibration levels as the estimated level.
With an experienced operator and/or smooth terrain, subtract the standard deviation from the typical vibration level in order to obtain the estimated vibration level.
For aggressive operations and/or rough terrain, add the standard deviation to the typical vibration level in order to obtain the estimated vibration level.

Operating activity	Typical vibration level [m/s^2]			Standard deviation [m/s^2]		
	$1.4*a_{w,eqx}$	$1.4*a_{w,eqy}$	$a_{w,eqz}$	$1.4*s_x$	$1.4*s_y$	s_z
Excavating	0.44	0.27	0.30	0.24	0.16	0.17
Hydraulic breaker application	0.53	0.31	0.55	0.30	0.18	0.28
Mining	0.65	0.42	0.61	0.21	0.15	0.32
Travelling	0.48	0.32	0.79	0.19	0.20	0.23

(*1) ISO/TR 25398:2006 Mechanical vibrations – Guidelines for assessment of exposure to whole-body vibration of ride-on machine – Use of harmonized data measured by international institutes, organizations and manufacturers.

CONFORMITY

Information on the fluorinated greenhouse gas contained in the machine

Label on the machine

1. Text showing this machine contains fluorinated greenhouse gases.
2. Type of Refrigerant: HFC-134a
3. Amount of refrigerant in kilogram
4. 'global warming potential (GWP)' means a climatic warming potential of a greenhouse gas relative to that of carbon dioxide.
5. 'tonne(s) of CO_2 equivalent (CO_2e)' means a quantity of greenhouse gases, expressed as the product of the weight of the greenhouse gases in metric tonnes and of their global warming potential.
6. CO_2e in tonnes

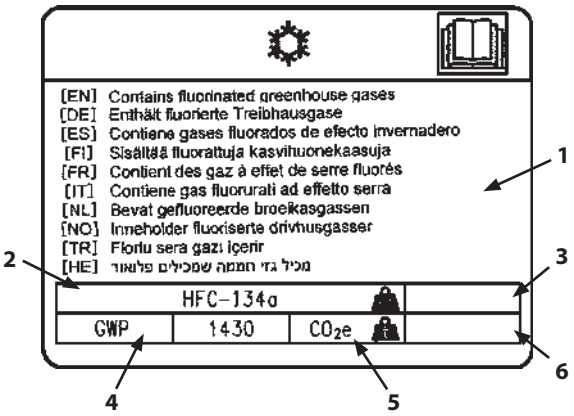

MPD8-00-001-1 ja

*Immediately resolve any leakage to limit the environmental impact.

*For the refrigerant and CO_2e amount, please refer to the maintenance page for the Air Conditioner.

*Filling and retrieval should be performed by qualified personnel and waste refrigerant should be disposed in accordance with local regulations.

Engine Importer information

The engine was placed on the EU market by:
Hitachi Construction Machinery (Europe) NV
Souvereinstraat 16, 4903RH Oosterhout, The Netherlands

CONFORMITY

Electric Fans

We consider our products exempted from EU regulation 327/2011, implementing EU directive 2009/125/EC, based on the fact that the fans are considered battery powered because the energy supply recharging the battery is not continuous nor at a constant level.

Sound Level Results

(2000/14/EC)
(2006/42/EC)
LwA: guaranteed sound power level of airborne noise (ISO 6395: 1988)
LpA: sound pressure level at operator's station (ISO 6396: 2008) Unit: dB(A)

Unit: dB(A)

	LwA	LpA
ZX120-7 class	98	69
ZX160-7 class	100	70
ZX180-7 class	100	69
ZX210LC-7	101	70
ZX210LCN-7, 240N-7	102	70
ZX240-7 class	102	67
ZX300-7 class	104	69
ZX330-7 class	105	71

This version is in effect as of October 1, 2014.

Hitachi Construction Machinery Europe N.V. (HCME) Limited Warranty

This limited warranty ("Warranty") applies only to the Product specified in this Operator's Manual.

This Warranty applies only to the Product manufactured and/or sold by Hitachi Construction Machinery (Europe) N.V. ("HCME") or through its authorized Distributor in the European Union, Switzerland, Iceland and Norway.

This Warranty does not apply to the Product operating in the countries outside the European Union with the exception of Switzerland, Iceland and Norway. (In other areas different warranties may apply. Copies of applicable warranties may be obtained by written request to Hitachi Construction Machinery Co., Ltd.)

HCME warrants the new Product will comply in all material respects with HCME's specifications thereof and will be free of defects proved to have been caused by defective materials and/or faulty workmanship, in the sole judgment of HCME during the following period:

Warranty Period

Twelve (12) months, unlimited hours of operation after the date of delivery to the first User.

This Warranty is subject to the following terms and conditions:

HCME's Obligations & Responsibilities

- Repair the Product in the sole judgment of HCME;
- Repair or provide replacement parts in the sole judgment of HCME (either new, remanufactured, repaired or by HCME approved parts) needed to correct the defects;
- The replaced parts become the property of HCME;
- The replaced parts provided under this Warranty are warranted for the remaining Warranty Period applicable to the Product in which they were installed;
- Provide reasonable and customary labour necessary for the Warranty works through its authorized Distributor at the place of business of HCME or its authorized Distributor during normal working hours.

User's Obligations & Responsibilities

- Operate the Product in accordance with the Operator's Manual and the designated specification of fuel and perform the required maintenance as indicated in the Operator's Manual;
- Provide proof of a delivery inspection to the first User, periodical maintenance compliance (receipts, copies of work orders, invoices and periodical inspection results);
- Pay for travel expenses of HCME or HCME's authorized Distributor (as the case may be) to a job site and transportation expenses;
- Labour costs in excess of those provided under "HCME Obligations & Responsibilities" including but not limited to premium or overtime labour costs;
- Pay for parts shipping charges in excess of those that are considered usual or customary;
- Pay for local taxes and duties if applicable;
- Pay for costs to investigate complaints, unless the problem is caused by a defect in HCME material or workmanship;
- Give a prompt notice (within five (5) working days) of a warrantable failure and/or potential problem;
- Promptly make the Product available for Warranty works;
- Permit HCME and/or its authorized Distributor to get access to all relevant information in order to investigate and/or repair the failure.

Limitations

This Warranty does not apply to service parts, wear parts, consumable parts such as lamps, fuses, V-belts, brake clutch lining, brake disc, clutch disc, ground engaging parts, track, tires, wire ropes, filter elements, oil, grease, grease nipples, etc., unless these parts fail as a result of a failure of a warranted part of the Product. Moreover, this Warranty shall not be applicable in the following cases:

- Failures resulting from unauthorized repair or adjustments in the Product;
- Failures resulting from the attachments, and/or parts, not manufactured and/or sold or approved by HCME;
- Failures resulting from using fuel and/or lubricant other than the type designated by HCME;
- Failures resulting from operation in disregard of the Operator's Manual and/or catalogues and/or such instructions as are issued by HCME for the Product;
- Failures resulting from any abuse, neglect, improper handling and/or insufficient or erroneous maintenance of the Product;
- Failures resulting from floods, lightning, storms, fires, and other Acts of God;
- Failures resulting from the User's delay in prompt repair of the initial problem;
- Failures resulting from any use and/or installation that HCME judges improper;
- Minor change of colour and/or rust on the Product ascribable to normal wear and tear;
- Such phenomena as normal noise, vibration, etc. which will not affect the function of the Product;
- Minor adjustments such as re-torque and tightening of nuts, bolts, hoses, hydraulic lines, fittings and troubleshooting.

THIS WARRANTY IS EXCLUSIVE AND IN LIEU OF ALL OTHER WARRANTIES AND THERE IS NO IMPLIED WARRANTY OF MERCHANTABILITY OR FITNESS FOR A PARTICULAR PURPOSE. THIS WARRANTY CONSTITUTES USER'S SOLE RIGHT AND REMEDY AND HCME'S SOLE OBLIGATIONS & RESPONSIBILITIES IN RESPECT OF ANY DEFECTIVE OR MALFUNCTIONING PRODUCTS AND IS SUBJECT TO ANY LIMITATIONS OF LIABILITY THAT ARE PART OF ANY SALES AGREEMENT WITH HCME.

FOR THE AVOIDANCE OF DOUBT AND WITHOUT PREJUDICE TO THE FOREGOING, HCME WILL NOT BE LIABLE FOR ANY DIRECT OR INDIRECT DAMAGES (INCLUDING BUT NOT LIMITED TO ANY CONSEQUENTIAL DAMAGES, LOSS OF REVENUES, LOSS OF PROFITS OR BUSINESS INTERRUPTION LOSSES) UNLESS THE DAMAGE IS THE RESULT OF HCME'S WILFULL MISCONDUCT OR GROSS NEGLIGENCE.

EXCEPT AS EXPRESSLY STATED HEREIN, THERE ARE NO WARRANTIES, EXPRESS OR IMPLIED, BY OPERATIONS OF LAW OR OTHERWISE, PERTAINING TO THE PRODUCTS.

This version is in effect as of October 1, 2014.

Hitachi Construction Machinery Europe N.V. (HCME) Limited Warranty

IF THIS WARRANTY IS ALSO TRANSLATED INTO ANOTHER LANGUAGE, DIFFERENT FROM ENGLISH, IN CASE OF DISCREPANCIES BETWEEN THE TEXTS, THE TEXT IN ENGLISH LANGUAGE SHALL PREVAIL.

THIS WARRANTY SHALL BE GOVERNED BY AND IS CONSTRUED IN ACCORDANCE WITH THE LAW OF THE NETHERLANDS WITH THE EXCLUSION OF THE UN CONVENTION ON CONTRACTS FOR THE INTERNATIONAL SALE OF GOODS (CISG). ALL CLAIMS AND DISPUTES ARISING OUT OF OR IN CONNECTION WITH THIS WARRANTY SHALL BE SETTLED BY THE COMPETENT COURT IN AMSTERDAM, THE NETHERLANDS. HOWEVER, HCME SHALL HAVE THE RIGHT TO SUBMIT ANY CLAIM OR DISPUTE TO A COURT THAT WOULD HAVE JURISDICTION IN THE ABSENCE OF THE FOREGOING STIPULATION. AS AN EXCEPTION, IF THE USER IS DOMICILED OUTSIDE THE EUROPEAN UNION, SWITZERLAND, NORWAY OR ICELAND, UPON COMMENCEMENT OF PROCEEDINGS ALL CLAIMS AND DISPUTES ARISING OUT OF OR IN CONNECTION WITH THIS WARRANTY, SHALL BE FINALLY SETTLED IN ACCORDANCE WITH THE ARBITRATION RULES OF THE NETHERLANDS ARBITRATION INSTITUTE (NAI). THE ARBITRAL TRIBUNAL SHALL BE COMPOSED OF THREE ARBITRATORS WHO SHALL DECIDE IN ACCORDANCE WITH THE RULES OF DUTCH LAW. THE PLACE OF ARBITRATION SHALL BE AMSTERDAM, THE NETHERLANDS. THE ARBITRAL PROCEDURE SHALL BE CONDUCTED IN THE ENGLISH LANGUAGE.

Claims under this Warranty should be submitted to a place of business of an authorized HCME's Distributor or directly to HCME. For the information concerning either the address to submit the claims or HCME as the issuer of this Warranty, please write to: Hitachi Construction Machinery (Europe) N.V., Sicilieweg 5, 1045 AT, Amsterdam, The Netherlands.

Hydraulic Excavator ZX120-7 class/ZX160-7 class/ZX180-7 class/ZX200-7 class/ZX240-7 class/ZX300-7 class/ZX330-7 class

Operator's Manual (Original Instruction)

Manual part number : ENMDFY-EN2-3

Hitachi Construction Machinery (Europe) N.V.
Address : Siciliëweg 5, 1045 AT, Amsterdam, The Netherlands
URL : http://www.hitachi-c-m.com