Hitachi Construction Machinery Co., Ltd.

URL:https://www.hitachicm.com/global/

PRINTED IN JAPAN (E) 2023, 12

ZW140-7 • 160-7 • 160PL-7 WHEEL LOADER OPERATOR'S MANUAL

ENMNTL-2-1

PART NO. ENMNTL-2-1

HITACHI

Reliable Solutions

Operator's Manual

ZW 140-7 160-7 160PL-7

Wheel Loader

Serial No. 20101 and up

CALIFORNIA

Proposition 65 Warning

Diesel engine exhaust and some of its constituents are known to the State of California to cause cancer, birth defects, and other reproductive harm.

INTRODUCTION

Read this manual carefully to learn how to operate and service your machine correctly. Failure to do so could result in personal injury or machine damage.

This standard specification machine can be operated under the following conditions without being modified. Atmospheric Temperature: –20 °C to 45 °C (–4 °F to 113 °F) Altitude: 0 m to 2000 m (0 ft to 6600 ft)

In case the machine is used under conditions other than described above, consult a dealer authorized bu Hitachi Construction Machinery ("Authorized Dealer").

This manual should be considered a permanent part of your machine and should remain with the machine when you sell it.

This machine is of metric design. Measurements in this manual are metric. Use only metric hardware and tools as specified.

Right-hand and left-hand sides are determined by facing in the direction of forward travel.

Write product identification numbers in the Machine Numbers section. Accurately record all the numbers to help in tracing the machine should it be stolen. Authorized Dealer also needs these numbers when you order parts. If this manual is kept on the machine, also file the identification numbers in a secure place off the machine.

Be sure to use fuel that complies with JIS K-2204, EN-590 or ASTM D-975. Also use fuel that complies with solid contamination level of class 18/16/13 of ISO4406-1999 (solid contamination includes dust). If the fuel specified above is not used, exhaust gas that exceeds the regulation values may be discharged, causing serious problem on the engine. Consult Authorized Dealer.

Warranty is provided as a part of Hitachi Construction Machinery's support program for customers who operate and maintain their equipment as described in this manual. The warranty is explained on the warranty certificate which you should have received from Authorized Dealer.

This warranty provides you the assurance that Hitachi Construction Machinery will back its products where defects appear within the warranty period. In some circumstances, Hitachi Construction Machinery also provides field improvements, often without charge to the customer, even if the product is out of warranty. **Should the equipment be abused, or modified to change its performance beyond the original factory specifications, the warranty will become void and field improvements may be denied.** Setting fuel delivery above specifications or otherwise overpowering machines will result in such action.

Only qualified, experienced operators officially licensed (according to local law) should be allowed to operate the machine. Moreover, only officially licensed personnel should be allowed to inspect and service the machine.

PRIOR TO OPERATING THIS MACHINE, INCLUDING COMMUNICATION SYSTEM, IN A COUNTRY OTHER THAN A COUNTRY OF ITS INTENDED USE, IT MAY BE NECESSARY TO MAKE MODIFICATIONS TO IT SO THAT IT COMPLIES WITH THE LOCAL REGULATORY STANDARDS (INCLUDING SAFETY STANDARDS) AND LEGAL REQUIREMENTS OF THAT PARTICULAR COUNTRY. PLEASE DO NOT EXPORT OR OPERATE THIS MACHINE OUTSIDE OF THE COUNTRY OF ITS INTENDED USE UNTIL SUCH COMPLIANCE HAS BEEN CONFIRMED. PLEASE CONTACT HITACHI CONSTRUCTION MACHINERY CO., LTD. OR ANY OF OUR AUTHORIZED DISTRIBUTOR OR DEALER IF YOU HAVE ANY QUESTIONS CONCERNING COMPLIANCE.

In this manual, urea water is indicated as DEF/ AdBlue®.

"DEF" stands for the Diesel Exhaust Fluid.

AdBlue® is a registered trademark of the Verband der Automobilindustrie e.V. (VDA).

The Bluetooth® word mark and logos are registered trademarks owned by Bluetooth SIG, Inc. and any use of such marks by Hitachi Construction Machinery Co., Ltd. is under license. Other trademarks and trade names are those of their respective owners.

All information, illustrations and specifications in this manual are based on the latest product information available at the time of publication. The right is reserved to make changes at any time without notice.

©2023 Hitachi Construction Machinery Co., Ltd.
All rights reserved.

MEMO

INDEX

MACHINE NUMBERS
INTENDED USE
SAFETY
BEFORE OPERATION
OPERATOR'S STATION
BREAK-IN
OPERATING THE ENGINE
DRIVING THE MACHINE
OPERATING THE MACHINE
TRANSPORTING
MAINTENANCE
MAINTENANCE UNDER SPECIAL ENVIRONMENTAL CONDITIONS
STORAGE
TROUBLESHOOTING
SPECIFICATIONS
OPTIONAL ATTACHMENTS AND DEVICES
INDEX

MEMO

CONTENTS

MACHINE NUMBERS 1

INTENDED USE 5

Intended Use 5

SAFETY S-1

Recognize Safety Information S-1
Understand Signal Words S-1
Follow Safety Instructions S-2
Prepare for Emergencies S-3
Wear Appropriate Clothing S-3
Inspect Machine S-4
General Precautions for the Cab S-5
Use Handrail and Steps S-5
Adjust the Operator's Seat S-6
Ensure Safety Before Leaving or Standing up from Operator's Seat S-6
Fasten Your Seat Belt S-7
Move and Operate Machine Safely S-7
Handle Starting Aids Safely S-8
Start the Engine Only from Operator's Seat S-8
Jump Starting S-9
Precautions for Operations S-9
Investigate Job Site Beforehand S-10
Precautions about Operator’s Seat Protections for Falling Objects and when Overturned S-11
Provide Signals for Jobs Involving Multiple Machines S-12
Keep Riders off Machine S-12
Caution with an Overhead Obstacle S-12
Drive Safely S-13
.....S-13
Drive Machine Safely (Work Site) S-14
.....S-15
Travel on Public Roads Safely S-16
Avoid Injury from Roll Away Accidents S-16
Avoid Accidents from Backing Up and Turning S-17
Avoid Positioning Bucket or Attachment Over Anyone S-17
Avoid Tipping S-18
Never Undercut a High Bank S-19
Dig with Caution S-19
Perform Truck Loading Safely S-20
Avoid Power Lines S-20
Precautions for Lightning S-21
Object Handling S-21
Protect Against Flying Debris and Falling Object S-22
Park Machine Safely S-23
Handle Fluids Safely–Avoid Fires S-23
Transport Safely S-24
Practice Maintenance Safely S-25
Warn Others of Service Work S-27
Support Machine Properly S-27
Stay Clear of Moving Parts S-28
Support Maintenance Properly S-29
Prevent Parts from Flying S-30
Avoid Injury from Attachment Falling Accident S-30
Prevent Burns S-31
Replace Rubber Hoses Periodically S-31
Avoid High-Pressure Fluids S-32
Prevent Fires S-33
Check for Oil Leaks: S-33
Check for Short circuits: S-33
Clean up Flammable Materials: S-34
Check Key Switch: S-34
Check Heat Shields: S-34
Evacuating in Case of Fire S-35
Beware of Exhaust Fumes S-35
Precautions for Welding and Grinding S-36
Avoid Heating Near Pressurized Fluid Lines S-36
Avoid Applying Heat to Lines Containing Flammable Fluids S-36
Precautions for Handling Accumulator and Gas Damper S-37
Precautions for Diesel Exhaust Fluid (DEF) S-37
Remove Paint Before Welding or Heating S-38
Beware of Asbestos and Silica Dust and Other Contamination S-38
Prevent Battery Explosions S-39
Service Air Conditioning System Safely S-39
Handle Chemical Products Safely S-40
Dispose of Waste Properly S-40
Never Ride Attachment S-41
Notes on Aftertreatment Device S-41
Precautions for Communication Terminal S-41
Precautions for Communication Terminal Equipment S-42
Precautions for Aerial Angle (If Equipped) S-43
Precautions for Rear Obstacle Detection System (If Equipped) S-43
Visibility Map for Machine Model ZW140-7 Personal Hazard S-44
Conditions: Driver's visibility on 1mRB and VTC are evaluated under ISO 5006. .....S-44
Visibility Map for Machine Model ZW160-7 Personal Hazard S-45
Conditions: Driver's visibility on 1mRB and VTC are evaluated under ISO 5006. .....S-45
Visibility Map for Machine Model ZW160PL-7 Personal Hazard S-46
Conditions: Driver's visibility on 1mRB and VTC are evaluated under ISO 5006. .....S-46
Visibility Map for Machine Model ZW140-7, 160-7, 160PL-7 Aerial Angle (Surround View) (Optional) S-47
Area where a person is recognizably displayed on the monitor S-47

CONTENTS

Visibility Map for Machine Model ZW140-7, 160-7, 160PL-7 Rear Obstacle Detection Sensor (Optional) S-49
ROD Sensor Detection Zone S-49
Safety Signs S-50

BEFORE OPERATION 1-1

Name of Components 1-1
Getting ON and OFF the Machine 1-2
About Aftertreatment Device 1-3
Aftertreatment Device Condition Indicator 1-5
Aftertreatment Device Manual Regeneration Request 1-6
Aftertreatment Device Manual Regeneration Procedure 1-7

OPERATOR'S STATION 1-10

layout of equipment in operator's station (illustration contents) 1-10
Layout (Right Console) (Illustration Contents) 1-12
Multi-Function Monitors 1-13
Summary 1-13
Monitor Panel (Main Monitor) 1-14
Main Monitor Indicator Lights (Illustration Contents) 1-14
Main Monitor Basic Screen 1-27
Main Monitor Basic Screen Displayed Items 1-28
DEF/SCR System Alarm 1-32
Displaying Main Monitor Main Menu 1-36
Main Monitor Menu Configuration 1-37
Configuring Sub Meters 1-38
Display 1-39
Unit Selection 1-40
Date and Time 1-41
Setting the Clock 1-41
Date Settings 1-43
Display Format Settings 1-45
Language Settings 1-47
Display Language List 1-48
Brightness Adjustment 1-49
Aftertreatment Device Regeneration Inhibition 1-50
Troubleshooting 1-52
Maintenance 1-54
Maintenance Notices 1-56
Remaining Time and Maintenance Interval 1-57
Monitoring 1-59
Sub Monitor 1-60
Sub Monitor Controller 1-60
Checking Panel Switch Settings 1-61
Display Items 1-62
Rear View Camera Display Modes 1-64
Displaying Sub Monitor Basic Screen 1-65
Operator Setting Selection (At Startup) 1-66
Sub Monitor Basic Screen Configuration 1-67
Sub Monitor Basic Screen Displayed Items 1-68
Displaying Sub Monitor Main Menu 1-75
Sub Monitor Menu Configuration 1-76
Alarm List 1-77
Remedy 1-78
Operator Settings Screen 1-81
Changing Operator Settings 1-83
Select Material (ZW140-7, 160-7 only) 1-84
Select Target Load (ZW140-7, 160-7 only) 1-84
Payload Checker (ZW140-7, 160-7 only) 1-84
Ride Control Drive Speed Settings 1-85
Auto Leveler Settings 1-86
Lift Arm Height Kick Out ON/OFF, Stop Height Settings 1-87
Lift Arm Lower Kick Out ON/OFF, Stop Height Settings 1-89
Bucket Kick Out ON/OFF, Stop Angle Settings 1-91
Settings Menu 1-93
Auto Shut-Down Time Setting 1-93
Displaying Control Lever Setting Menus 1-95
Lift Arm Lever Characteristic Mode 1-96
Bucket Lever Characteristic Mode 1-97
3rd/4th Lever Characteristic Mode (Optional) 1-98
Cylinder End Soft Stop 1-99
3rd/4th Lever Detent Setting (Optional) 1-100
Bucket Dump Stopper Contact Cylinder Length Learning 1-102
Bucket Tilt Stopper Contact Cylinder Length Learning 1-103
Payload Checker Non-Load Learning (ZW140-7,160-7 only) 1-104
Rear Obstacle Alarm Settings ON/OFF (Optional) 1-108
Warming Up Settings ON/OFF 1-110
Displaying the Display Menu 1-111
Brightness Adjustment Procedure 1-112
Rear View Camera Monitor Reverse Interlocking Setting (Optional) 1-113
Displaying Information Menu 1-115
Operation Information 1-116
Troubleshooting 1-117
Inspect Machine Daily Before Starting 1-119
Switch Panel (Illustration Content) 1-122
Deceleration Mode Switch 1-124
Auto Shut-Down ON/OFF (Optional) 1-125
Traction Control Switch 1-127
Fan Reverse Rotation Switch (Optional) 1-128
Forward/Reverse Selector Switch 1-130
Approach Speed Control Switch 1-132
Power Mode ON/OFF Switch 1-133
Aftertreatment Device Regeneration Inhibit Switch 1-134
Aftertreatment Device Regeneration Switch 1-135
Ride Control Switch 1-136
Front/Rear Wiper Switches 1-137

CONTENTS

Front/Rear Washer Switch 1-139
Front Console Switches (Illustration Contents) 1-140
Parking Brake Switch 1-141
Work Light Switch 1-143
Hazard Switch 1-144
Shift Switch 1-145
Horn Switch 1-146
Light Switch 1-147
High-Low Beam Switch 1-148
Key Switch 1-149
1st Speed Limit Switch 1-150
Emergency Steering Operation Check Switch(Machine Equipped with Emergency Steering System) 1-151
Right Console and Control Lever Switches (Illustration Contents) 1-152
Control Lever Lock Switch 1-153
Quick Wiper 1-154
Sub Monitor Controller 1-155
Quick Power Switch 1-156
Quick Coupler Switch (ZW140-7, 160-7) (Optional) 1-157
3rd/4th Spool Control Switch (Optional) 1-158
Armrest Adjustment 1-159
Front Attachment Control Lever 1-160
Multi-Function Joystick Lever 1-160
Operator's Station Equipment 1-162
24 V Power Supply Socket 1-162
Rear Tray 1-163
External Power Supply (12 V) 1-163
Glove Compartment (Air Conditioner Cooled/ Heated Box) 1-164
Tray and Drink Holder 1-164
USB Power Supply 1-165
Adjusting the Operator's Seat 1-166
Seat Belt 1-171
Seat Pocket 1-171
Auto Air Conditioner 1-172
Features 1-172
Name of Components 1-173
Control Name and Function 1-174
Defroster Operation 1-177
Cool Head/Warm Feet Mode 1-177
Tips for Optimal Air Conditioner Usage 1-178
Digital Radio 1-180
Control Panel 1-180
LCD Screen 1-182
Basic Operations 1-184
Digital Audio Broadcasting (DAB) 1-187
Using the AM/FM Radio 1-192
Bluetooth® Connections 1-196
USB Device Connections 1-200
Setting Screens 1-203
Aerial Angle Function (Optional) 1-214
Switching the Monitor Display 1-216
Machine Icon 1-217
Surrounding Image + Rear Image 1-217
Camera Guide Icon 1-217
Discrepancies between Images and Actual Road Surface 1-218
ROPS Cab 1-219
Cab Light 1-221
Emergency Evacuation Hammer 1-221
Coat Hook 1-221
Sun Visor 1-222
Overhead Switch Panel (Optional) 1-224
Left Cab Door 1-225
Left Door Open/Close Lever 1-226
Window Lock Levers 1-226
Fully Opening the Left Door 1-227
Cab Door Release Lever 1-227
Right Cab Door 1-228
Right Door Open/Close Lever 1-228
Right Door Lock 1-228
Rear View Mirror 1-229
Inside Rear View Mirror 1-229
Outside Rear View Mirror 1-229
Rear View Mirrors Angle Adjustment Switch (Optional) 1-230
Installation and Adjustment of Mirrors 1-231
Mirror Installation Diagram 1-231
Steps 1-233
Cab Top Rails 1-233
Fuse Box 1-234
Battery Disconnect Switch 1-237
Switch Operation 1-238
Articulation Lock Bar 1-239
Inspection/Maintenance Access Side Cover 1-240
Tool Box 1-241
Towing Pin 1-241
Rear Obstacle Detection Sensor 1-242
Rear Obstacle Detection System (Automatic Speed Reduction) Assist System (Optional) 1-243
Vandal-Proofing Equipment 1-244

BREAK-IN 2-1

Observe Engine Operation Closely 2-1
Every 8 Hours or Daily 2-1
After the First 50 Hours 2-1
After the First 100 Hours 2-1

OPERATING THE ENGINE 3-1

Inspect Machine Daily Before Starting 3-1
Before Starting Engine 3-3
Starting the Engine 3-7
Starting the Engine at Normal Temperature 3-7
Starting in Cold Weather 3-9
Preheating 3-9
Check Instruments After Starting 3-10
Checking Monitor Functions 3-10
Check Engine Noise and Exhaust Gas Color 3-10

CONTENTS

Selecting Operator's Setting 3-11
Checking Maintenance Items 3-11
Using Booster Cables 3-12
Connecting Booster Cables 3-13
Disconnecting the Jumper Cables 3-14
Warm-Up Operation 3-15
Warm-Up Procedure in Cold Weather 3-16
Stopping the Engine 3-18

DRIVING THE MACHINE 4-1

Driving Guidance Info 4-1
Shifting 4-2
Steering 4-3
Direction Indicator Lever 4-4
Shift Switch 4-5
Forward/Reverse Selector Switch 4-6
Switch Operation 4-7
Accelerator Pedal 4-8
Brake Pedal 4-8
Tilt, Telescopic Lever/ Steering Column Pop-up Pedal 4-9
Parking Brake Switch 4-10
Power Mode ON/OFF 4-11
Ride Control ON/OFF 4-12
Starting Off 4-13
Selecting Forward/Reverse 4-16
Emergency Steering (Machine Equipped with Emergency Steering) 4-17
Stopping the Machine 4-18
Temporary Stopping and Restart of Driving 4-20
Parking 4-21
Emergency Situations 4-22
When the Engine Stalls while Traveling 4-22
Precautions for Traveling 4-23
Traveling in Water or on Muddy Terrain 4-24
Precautions for Traveling on Slopes 4-25
Precautions to be Taken if Machine Failure Occurs 4-26

OPERATING THE MACHINE 5-1

Front Attachment Control Lever 5-1
Control Lever Lock 5-2
Approach Speed Control Switch 5-3
Adjusting the Dual Lift Arm Auto Leveler 5-4
Auto Shut-Down (Optional) 5-5
Auto Shut-Down Operating Conditions 5-6
Aftertreatment Device Manual Regeneration 5-7
Before Operation 5-10
Ensure Safety when Operating on Road Shoulders 5-10
Avoid Reckless Digging Practices 5-11
Avoid Sudden Steering Changes and/or Sudden Braking 5-11
Avoid Operating with Unbalanced Loads 5-11
Avoid Frequent Bucket Shaking 5-11
Excavation 5-12
Digging and Loading Accumulated Soil 5-12
Digging and Loading Level Ground 5-13
Grading 5-14
Loading 5-15
Dozing 5-18
Scooping 5-18
Removing Snow 5-19
Lifting Wheel Loader 5-19
Precautions for After Operations 5-20
Payload Checker (ZW140-7, 160-7 only) 5-21
Introduction 5-21
Function Button Switch 5-22
Payload Checker Monitor Display 5-23
Display Ranges and Default Values 5-32
Weighing Flowchart 5-35
Payload Checker Related Menu Screen Structure 5-39
Payload Checker Menu Operation 5-40
Payload Checker Function Mode 5-74

TRANSPORTING 6-1

Transporting by Road 6-1
Transporting by Trailer 6-1
Loading / Unloading on Trailer 6-2
Fastening the Machine for Transport 6-4
Transporting Wheel Loader (Urgent Situation) 6-6
Precautions for Self-Traveling 6-6
Precautions for Towing 6-7
Hydraulic Circuit Bypass 6-8
Releasing the Parking Brake 6-9
Towing Method 6-11
Lifting Machine 6-12
Length and Load of Wire Rope/Support bar 6-13

MAINTENANCE 7-1

Correct Maintenance and Inspection Procedures 7-1
Names of Components 7-3
ZW140-7,160-7 7-3
ZW160PL-7 7-4
Check the Hour Meter Regularly 7-5
Maintenance Guide Table 7-5
Preparation for Inspection and Maintenance 7-8
Lock the Frame 7-11
Maintenance and Inspection Side Covers 7-12
Maintenance Guide 7-13
A. Greasing 7-13
B. Engine 7-14
C. Powertrain 7-14
D. Hydraulic System 7-15
E. Fuel System 7-16
F. Air Cleaner 7-16
G. Cooling System 7-17
H. Electrical System 7-17
I. Brake System 7-17
J. Tires 7-18

CONTENTS

K. Air Conditioner 7-18
L. Aftertreatment Device 7-19
M. Urea SCR System 7-19
N. Miscellaneous 7-20
Periodic Replacement of Parts 7-21
Kinds of Oils 7-23
Grease 7-23
Engine Oil 7-23
Transmission Oil 7-24
Recommended Axle Oil 7-24
Hydraulic Oil 7-25
Long-Life Coolant 7-25
List of Consumable Parts 7-26
A. Greasing 7-29
Bucket Pin 7-30
Bucket Link Pin 7-31
Guide Pin (ZW160PL-7) 7-31
Bucket Cylinder Pin 7-32
Bell Crank Pin 7-33
Link Pin (ZW160PL-7) 7-33
Lift Arm Cylinder Pin 7-34
Lift Arm Cylinder Rod Pin 7-35
Lift Arm Pivot Pin 7-36
Steering Cylinder Pin 7-36
Steering Cylinder Rod Pin 7-37
Frame Center Hinge Pin 7-37
Axle Support Pin 7-38
Front Propeller Shaft Universal 7-38
Propeller Shaft Center Support 7-38
Center Propeller Shaft Universal 7-39
Center Propeller Shaft Spline 7-39
Rear Propeller Shaft Universal 7-40
Brake Pedal 7-40
Brake Pedal Linkage 7-40
B. Engine 7-41
Engine Oil Level 7-41
Change Engine Oil 7-42
Replace Engine Oil Filter 7-42
Check Crankcase Breather Tube 7-44
C. Powertrain 7-45
Check Oil Level of Transmission Oil 7-45
Replace Transmission Oil 7-46
Clean the Transmission Strainer 7-46
Replace the Transmission Oil Filter 7-48
Replace Axle Oil 7-49
Check for Oil Leaks Around the Axle and Cover. 7-52
Clean the Transmission Air Breather 7-52
D. Hydraulic System 7-53
Check Oil Level of Hydraulic Oil Tank 7-54
Replace Hydraulic Oil/Clean Hydraulic Oil Tank. 7-55
Suction Filter Cleaning 7-58
Replace Pilot Filter 7-59
Replace Hydraulic Oil Tank Return Filter 7-61
Replace HST Charge Filter Element 7-63
Replace Air Breather Element 7-64
Check the Pilot Accumulator for Function, Gas Leakage, Looseness and Damage 7-65
Replace Pilot Accumulator 7-66
Check the Ride Control Accumulator for Function, Gas Leakage, Looseness and Damage 7-66
Check Gas Pressure in Ride Control Accumulator 7-67
Check Gas Pressure in Steering Accumulator 7-67
Check Hoses and Lines 7-68
E. Fuel System 7-73
Amount of Fuel in the Tank 7-73
Drain Fuel Tank of Water and Sediment 7-76
Drain Fuel Filter of Water 7-77
Replace Main Fuel Filter Element 7-80
Replace Fuel Pre-Filter Element 7-81
Clean Solenoid Fuel Pump Strainer 7-82
Check Fuel Hoses 7-84
F. Air Cleaner 7-85
Clean or Replace Air Cleaner Element 7-85
Check Air Intake System 7-86
G. Cooling System 7-87
Coolant Level 7-88
Check the Drive Belt 7-89
Check the Drive Belt Tension 7-90
Replace Coolant 7-91
Clean the Radiator and Oil Cooler 7-92
H. Electrical System 7-94
Battery 7-95
Monitor Functions, Instrument Operation 7-101
Lamps Light or Flash 7-102
Check Horn and Reverse Buzzer 7-102
Check Electrical Wiring and Fuses 7-103
I. Brake System 7-104
Check Braking (Left/Right Interlocked) 7-104
Check the Parking Brake 7-105
Check the Accumulator for Function, Gas Leakage, Looseness and Damage 7-106
Check Gas Pressure of the Accumulator 7-107
Replace Parking Brake Accumulator 7-107
Check Brake Discs (Service and Parking) 7-107
J. Tires 7-108
Check and Adjust Tire Pressure 7-108
Check for Damage to Tires 7-109
Retighten Wheel Bolts 7-110
Tire Removal and Mounting 7-113
K. Air Conditioner 7-114
Clean and Replace Air Conditioner Filters 7-114
Check Air Conditioner Unit 7-118
Check Lines 7-118
Check the condenser 7-119
Check the Drive Belt 7-119
Check Refrigerant Level 7-120
Replace the Air Conditioner Receiver Drier 7-121
Check the Compressor and Pulley 7-122

CONTENTS

L. Aftertreatment Device 7-123
Check and Clean Muffler Filter Element 7-123
Check and Clean Aftertreatment Device 7-123
M. Urea SCR System 7-124
Check DEF/AdBlue® 7-125
Change DEF/AdBlue® 7-127
Replace DEF Supply Module Main Filter 7-128
Replace DEF Tank Water Supply Inlet Filter 7-130
N. Miscellaneous 7-131
Check Bucket Teeth and Cutting Edge 7-131
Check and Replace the Seat and Seat Belt 7-132
Check ROPS Cab and Resin Cab Roof Damage, Loose Bolts 7-132
Check Level of Washer Fluid 7-133
Check the Amount of Play in Steering Wheel 7-134
Accelerator Pedal Operation, Color and Sound of Exhaust Gas 7-135
Damage or Looseness of Rear View Mirrors 7-136
Damage or Looseness of Steps, Handrails and Cab Top Rails 7-137
Clean Engine Compartment and Engine Cover 7-138
Clean Rear View Camera and Side Camera (Optional) 7-138
Inspect and Adjust Valve Clearance 7-139
Retighten the Front Axle Mounting Bolts and Rear Axle Support Mounting Bolts 7-139
Tighten and Retighten Nuts and Bolts 7-140
Daily Check of Camera Images for Aerial Angle (Optional) 7-156
Check Aerial Angle Camera Image (Optional) 7-157
Check and Clean Rear Obstacle Detection Sensor Face (Optional) 7-157
Check Rear Obstacle Detection Sensor System Operation (Optional) 7-158

MAINTENANCE UNDER SPECIAL ENVIRONMENTAL CONDITIONS 9-1

Maintenance Under Special Environmental Conditions 9-1
Operation in Freezing Weather 9-3

STORAGE 10-1

TROUBLESHOOTING 11-1

SPECIFICATIONS 12-1

Standard Specifications ZW140-7, 160-7 12-1
Standard Specifications ZW160PL-7 12-2
Noise Level Inside of Cab 12-3

OPTIONAL ATTACHMENTS AND DEVICES 13-1

Operation of Quick Coupler (Hydraulic Type) 13-1
Removal 13-1
Installation 13-4

INDEX 14-1

MACHINE NUMBERS

The manufacturing Nos. explained in this group is the individual number (serial No.) given to each machine and engine components. These numbers are requested when inquiring any information on the machine and/or components.
Fill these serial Nos. in the blank spaces in this group to immediately make them available upon request.

Machine

TYPE :
PRODUCT
IDENTIFICATION
NUMBER :

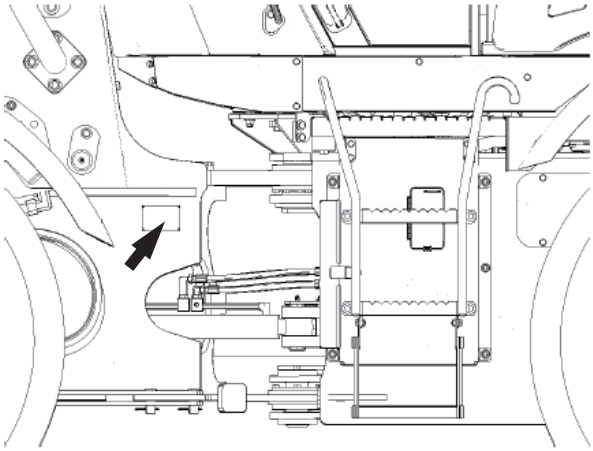

MNTL-00-005-1 ja

MACHINE NUMBERS

Engine

TYPE :

MFG. NO. :

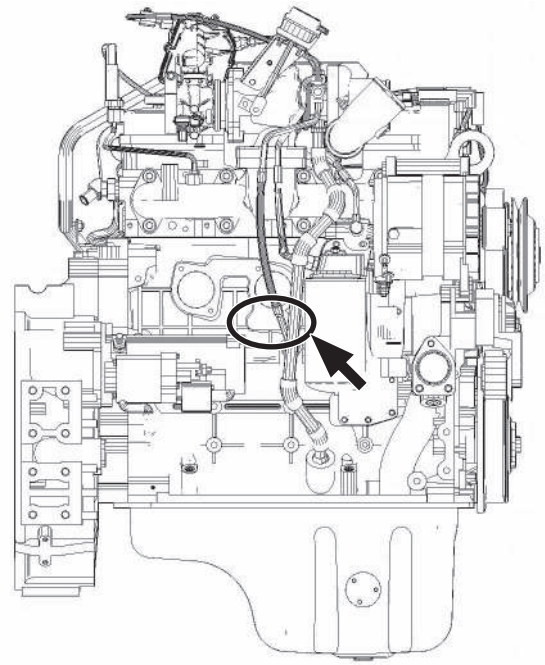

MNTL-00-002-1 ja

Aftertreatment Device

MFG. NO. :

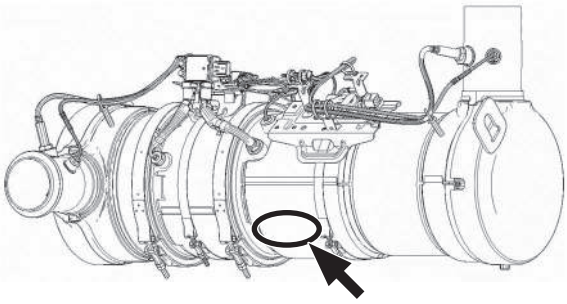

MNTL-00-003-1 ja

HST Pump

MFG. NO. :

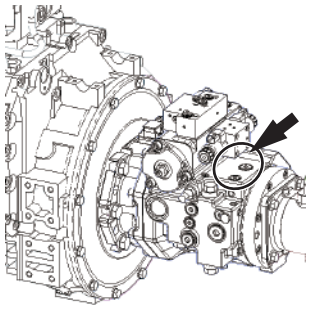

MNTL-00-006-1 ja

Transmission

MFG. NO. :

HST motor 1

MFG. NO. :

HST motor 2

MFG. NO. :

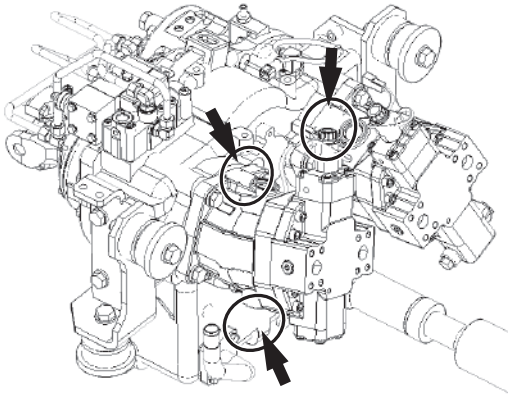

MNTL-00-007-1 ja

Rear Axle

TYPE :

MFG. NO. :

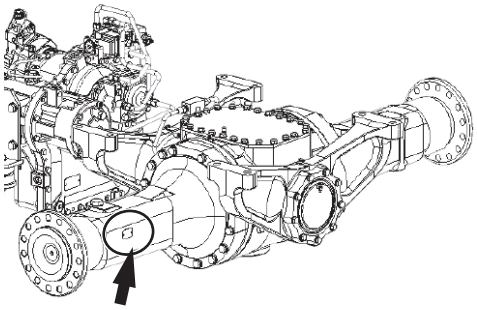

MNTL-00-008-1 ja

Front Axle

TYPE :

MFG. NO. :

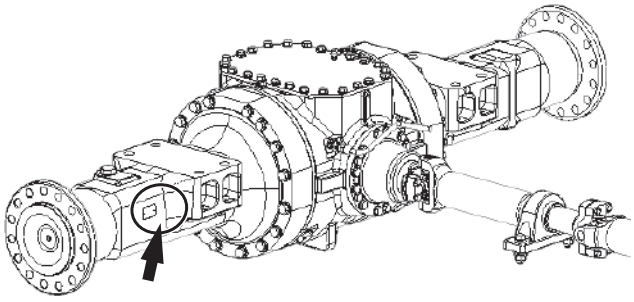

MNTL-00-009-1 ja

MACHINE NUMBERS

Cab

MFG. NO. :

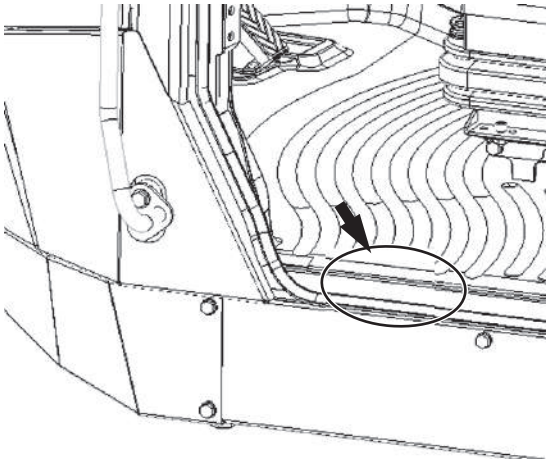

MNTL-00-010-1 ja

Bucket

MFG. NO. :

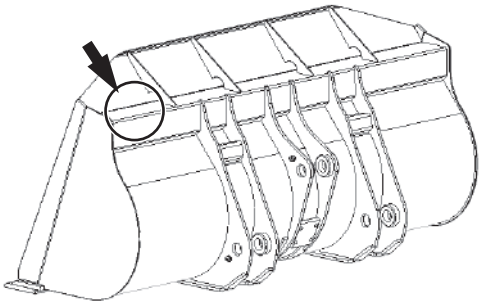

MNTL-00-011-1 ja

Intended Use

This machine is designed and intended to be used for excavating with a bucket or working with tools/attachments described in this manual or approved in writing by the manufacturer.
Risk assessment related to the specific application and working conditions of the machine may require additional safety measures such as protective guards, safety glazing, filtration of cabin air, etc. to be installed, enabling the machine to be operated safely under the specific conditions. Consult Authorized Dealer for further information on possibilities to adapt the machine accordingly.
This machine can be used for lifting applications that are within the lifting capacity of the machine. Use approved lifting points and lifting devices and follow the instructions provided in this manual.
Local regulations and instructions must be respected when using the machine. Using this machine and its equipment for operations other than those intended or approved by the manufacturer, are prohibited.

Modifications

No modification affecting the intended use or structural integrity and therefore safety of the machine should be made without written approval of the manufacturer. Modifications which are not approved include the use of unauthorized accessories, assemblies, parts or attachments, including but not limiting to those connected with a coupling device.
Any legal or natural person performing unapproved modifications to the machine assumes all liability directly or indirectly related to the modification.
The manufacturer reserves the right to reject any warranty claim arising from or related to unapproved modifications.

MEMO

Recognize Safety Information

- These are the **SAFETY ALERT SYMBOLS**.
  - When you see these symbols on your machine or in this manual, be alert to the potential for injury to persons.
  - Follow recommended precautions and safe operating practices.

SA-2644 ja

Understand Signal Words

- On machine safety signs, signal words designating the degree or level of hazard - DANGER, WARNING, or CAUTION are used with the safety alert symbol.
  - **DANGER** indicates an imminently hazardous situation which, if not avoided, will result in death or serious injury.
  - **WARNING** indicates a potentially hazardous situation which, if not avoided, could result in death or serious injury.
  - **CAUTION** indicates a potentially hazardous situation which, if not avoided, may result in minor or moderate injury.
  - **DANGER or WARNING safety signs** are located near specific hazards. General precautions are listed on **CAUTION safety signs**.
  - Some safety signs are occasionally used on this machine that do not use any of the designated signal words mentioned above after the safety alert symbol.
- To avoid confusing machine protection with personal safety messages, a signal word IMPORTANT indicates a situation which, if not avoided, could result in damage to the machine.

SA-632 en_GB

- NOTE: Indicates an additional explanation for a piece of information.

Follow Safety Instructions

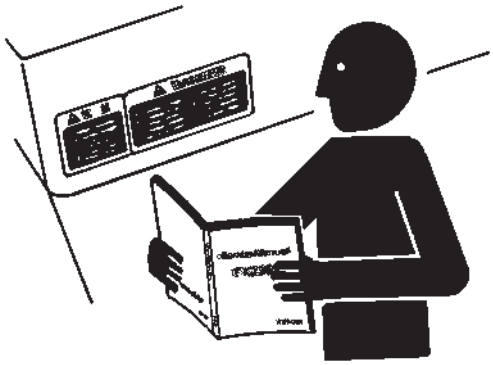

SA-003 ja

- Carefully read and follow all safety instructions on the machine and in this manual.
- Safety signs should be readable and replaced when necessary.
  - If a safety sign or this manual is damaged or missing, order a replacement from Authorized Dealer in the same way you order other replacement parts (be sure to state machine model and serial number when ordering).
- Learn how to operate the machine and its controls correctly and safely.
- Only trained, qualified and authorized personnel should operate the machine.
- Keep your machine in proper working condition.
  - Unauthorized modifications of the machine may impair its function and/or safety and affect machine life.
  - Do not modify any machine parts without authorization. Failure to do so may deteriorate the safety, function, and/or service life of the machine and will void Hitachi Construction Machinery Warranty.
  - Never attempt to modify or disassemble the inlet/exhaust parts of the engine and the aftertreatment device. Avoid shocks to the aftertreatment device, such as striking or dropping objects onto the device. Failure to do so may affect the exhaust gas purifying function, possibly damaging it or lowering its performance.
- Attachments and/or optional parts or equipment not matching machine characteristics and -capacities may cause injuries to persons, machine trouble and/or damage to material. If you are not sure of the suitability of attachments, optional parts, and/or equipment, contact Authorized Dealer. The safety messages in this SAFETY chapter are intended to illustrate basic safety procedures when working with machines. However, it is impossible to cover every hazardous situation you may encounter in these safety messages. Adequate measures resulting from job site risk assessment allow safe operation of machines. If you have any questions, you should first consult your supervisor and/or Authorized Dealer before operating or performing maintenance work on the machine.

Prepare for Emergencies

- Be prepared for a fire or an accident.
  - Keep a first aid kit and fire extinguisher on hand.
  - Thoroughly read and understand the label attached on the fire extinguisher to use it properly.
  - To ensure that a fire extinguisher can be always used when necessary, check and service the fire extinguisher at the recommended intervals as specified in the fire extinguisher manual.
  - Establish emergency procedure guidelines to cope with fires and accidents.
  - Keep emergency numbers for doctors, ambulance service, hospital, and fire department posted near your telephone.

SA-437 ja

Wear Appropriate Clothing

- Wear close fitting clothing and safety equipment appropriate to the job.

  You may need:
  - A hard hat
  - Safety shoes
  - Safety glasses, goggles, or face shield
  - Hand protection
  - Personal fall protection equipment
  - Hearing protection
  - Reflective clothing
  - Wet weather gear
  - Respirator or filter mask

  Be sure to wear the correct equipment and clothing for the job.
  - Avoid wearing loose clothing, jewelry, or other items that can catch on control levers or other parts of the machine.
- Operating equipment safely requires the full attention of the operator. Do not wear radio or music headphones while operating the machine.

SA-438 ja

Inspect Machine

- Inspect your machine carefully each day or shift before you start operating it to ensure the machine is in full working order.
  - During the inspection be sure to cover all points described in the "Inspect Machine Daily Before Starting" section in the operator's manual.

SA-435 ja

General Precautions for the Cab

- Before entering the cab, thoroughly remove all dirt and/or oil such as mud, grease, soil or stones from the soles of your work boots. If a control such as a pedal is operated with dirt and/or oil on the soles of the operator's work boots, the operator's foot may slip off the pedal, potentially resulting in a personal accident.
- Keep your cabin clean. Parts, tools, soil, stones, cans or lunch box or other obstacles may fold up or turn over, potentially blocking control levers or pedals which may result in unintended movement of the machine with the risk of accidents in serious injury or death.
- Avoid storing transparent bottles in the cab. Do not attach any transparent type window decorations on the windowpanes as they may focus sunlight, possibly starting a fire.
- Refrain from listening to the radio or using music headphones or mobile telephones in the cab while operating the machine.
- Keep all flammable materials and/or explosives away from the machine.
- After using the ashtray, always cover it to extinguish the match and/or tobacco.
- Do not leave cigarette lighters in the cab. When the temperature in the cab increases, the lighter may explode.
- If a floor mat is used, use an original Hitachi Construction Machinery floor mat specific to the machine model. If a floor mat other than original Hitachi Construction Machinery mat is used, it may be displaced and interfere with pedal movement during operation, potentially resulting in serious injury or death.

Use Handrail and Steps

- Falling is one of the major causes of injury.
  - When you get on and off the machine, always face the machine and maintain a three-point contact with the steps and handrails.
  - Do not use any controls as hand-holds.
  - Never jump on or off the machine. Never mount or dismount a moving machine.
  - Before getting on or off the machine, check the condition of the steps and handrails for sticking of slippery material like grease or mud. Thoroughly remove such material if stuck.
  - Repair any damage to the steps and/or handrails before using the machine. Retighten loose bolts.
  - Never get on and off the machine with tools or other items in your hands.

SA-439 ja

Adjust the Operator's Seat

SA-378 ja

- A seat which is poorly adjusted for the individual operator, or the work to be undertaken, may quickly fatigue the operator leading to loss of focus and maloperation.
  - The seat should be adjusted whenever the operator of the machine changes.
  - The operator should be able to fully depress the pedals in any direction and to operate the control levers in any direction while his back remains against the seat back.
  - If not, adjust the seat and check again.
  - Depending on the work, the seat may need to be moved forward or backward to improve visibility into the working area. Do not stand up from your seat while operating the machine.
  - Adjust the mirrors to maximize visibility into areas without direct visibility, in particular areas close to the machine. For mirror adjustment, refer to the mirror adjustment section of this manual.

Ensure Safety Before Leaving or Standing up from Operator's Seat

- Before leaving the Operator’s Seat, be sure to first lower the front attachment to the ground and move the FNR lever to the neutral position (N), turn ON the parking switch, move the control lever lock switch or the lever locks to the LOCK position. Turn the key switch OFF to stop the engine. Leaving the Operator’s Seat without stopping the engine may allow the machine to unexpectedly move when a body part unintentionally comes in contact with a steering wheel, control lever and/or pedal, resulting in serious injury or death.
- Before standing up from the operator's seat to open or close a window or to adjust the seat position and so on, be sure to first lower the front attachment to the ground and move the FNR lever to the neutral position, turn ON the parking switch, move the control lever lock switch or the lever locks to the LOCK position. Failure to do so may allow the machine to unexpectedly move when a body part unintentionally comes in contact with a steering wheel, control lever and/or pedal, potentially resulting in serious injury or death.
- Before leaving the machine, close all windows, doors, and access covers and lock them.

Fasten Your Seat Belt

- Be sure to remain seated with the seat belt securely fastened at all times when the machine is in operation to minimize the chance of injury from an accident.
  - If the machine should overturn, the seat belt keeps the operator within the safe zone provided by the cabin- or canopy structure. Failure to use the seat belt may result in the operator being injured, thrown from the cab and subsequently crushed by the overturning machine, potentially resulting in serious injury or death.
  - Prior to operating the machine, thoroughly examine webbing, buckle and attaching hardware. If any item is damaged or worn, replace the seat belt or component before operating the machine.
  - We recommend that the seat belt is replaced every three years regardless of its apparent condition.

SA-237 ja

Move and Operate Machine Safely

- Be aware of bystanders.
  - Take extra care not to run over bystanders. Confirm the location of bystanders before moving or operating the machine.
  - Always keep the travel alarm and horn in working condition (if equipped). It allows you to warn people when you plan to start moving the machine.
  - Use a signal person when moving or operating the machine in confined areas. Coordinate hand signals before starting the machine.
  - Use appropriate illumination. Check that all lights are functioning correctly before operating the machine. If any faulty illumination is present, immediately repair it.

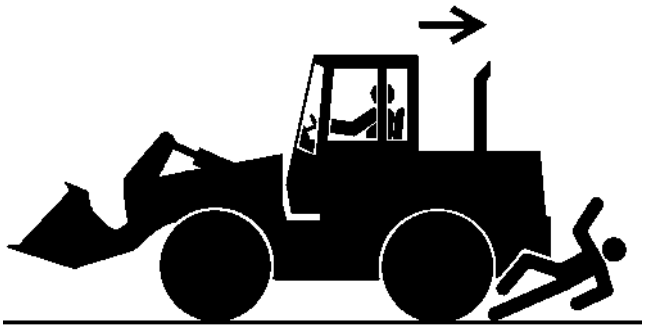

SA-398 ja

  - Ensure the cab door, windows, doors and covers are closed and securely locked.
  - Check the mirrors and the monitor in the cab for visibility.
    Keep mirrors, camera lenses and the monitor display clean. Repair or replace any defective part(s).
    Refer to Mirrors, Rear View Monitor, and Aerial Angle section for information on cleaning the camera lenses and the monitor display.

Handle Starting Aids Safely

- Starting fluid is highly flammable.
  - Keep all sparks and flame away when using it.
  - Keep starting fluid well away from batteries and cables.
  - Remove container from machine if engine does not need starting fluid.
  - To prevent accidental discharge when storing a pressurized container, keep the cap on the container, and store it in a cool, well-protected location.
  - Do not incinerate or puncture a starting fluid container.

SA-293 ja

Start the Engine Only from Operator's Seat

- Inappropriate engine starting procedures may cause the machine to run away, possibly resulting in serious injury or death.
  - Start the engine only while seated in the operator's seat.
  - Never start the engine while standing on the tire or ground.
  - Do not start engine by shorting across starter terminals.
  - Before starting the engine, confirm that all control levers are in neutral position.
  - Before starting the engine, confirm the safety around the machine and sound the horn to alert bystanders.

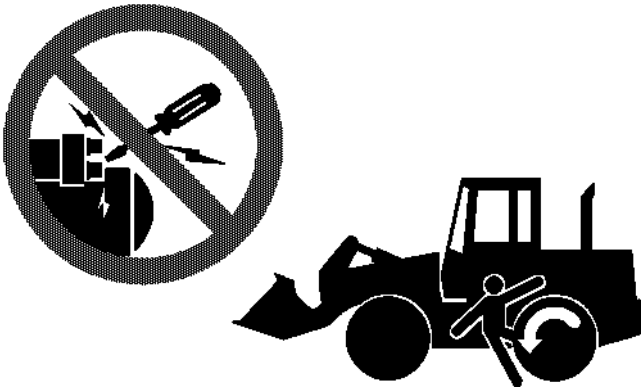

SA-431 ja

Jump Starting

- Battery gas can explode, resulting in serious injury.
  - If the engine must be jump started, be sure to follow the instructions shown in the "OPERATING THE ENGINE" chapter in the operator's manual.
  - The operator must be in the operator's seat so that the machine will be under control when the engine starts. Jump starting is a two-person operation.
  - If battery is frozen, warm and defrost before use.
  - Failure to follow correct jump starting procedures could result in a battery explosion or a runaway machine.

SA-032 ja

Precautions for Operations

- Investigate and perform job site risk assessment before starting operations.
  - Be sure to wear close fitting clothing and safety equipment appropriate for the job, when operating the machine.
  - Keep bystanders and obstacles clear from the area of machine operation. Keep bystanders away from areas where there is risk of, such as flying objects.
  - Always be aware of the surroundings while operating.

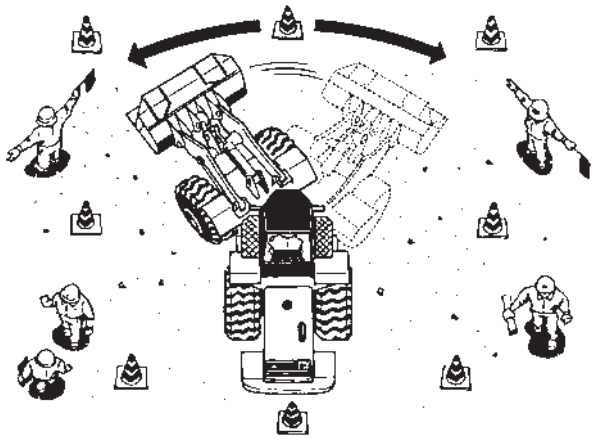

SA-2868 ja

Investigate Job Site Beforehand

SA-447 ja

- When working at a slope, the edge of an excavation or on a road shoulder, the machine could tip over, possibly resulting in serious injury or death.
- Investigate the configuration and ground conditions of the job site beforehand to prevent the machine from tipping over and to prevent the ground, stockpiles, or banks from collapsing.
- Perform a job site risk assessment and make a work plan to perform the work in a safe way. Use machines suitable for the work and job site.
- Reinforce ground, edges, and road shoulders as necessary. Keep the machine away from the edges of excavations and road shoulders.
- Ensure that the safety provisions installed on the machine are in good condition and sufficient for the work to be performed.
- Analyse the result of job site risk assessment considering the performance limitations of the machine's operator protective structures. In case potential residual risks are foreseen in a job site, take appropriate measures to mitigate the risks.
- When the ground footing is weak, reinforce the ground before starting work.
- When working on frozen ground, be on extreme alert. As ambient temperatures rise, the ground footing becomes loose and slippery.
- Beware of the possibility of fire when operating the machine near flammable objects such as dry grass.

Precautions about Operator's Seat Protections for Falling Objects and when Overturned

The standard cab of the machine has a (Falling Object Protective Structure (FOPS)) mechanism for protecting the operator against falling objects, and a (Roll-Over Protective Structure (ROPS)) mechanism for absorbing the impact energy and protecting the operator if the machine rolls. Please note however that it cannot fulfill its function if the maximum machine operating weight noted in the ROPS certificate is exceeded due to modifications or mounting of a special optional attachment; doing so may lead to serious injury or death.

In addition, comply with the following points to ensure the performance of the protective structures.

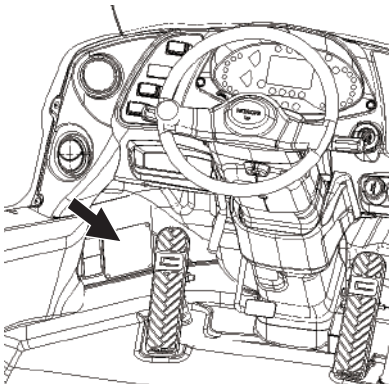

SA-2865-1 ja

- Welding or drilling the cab may weaken the structure, so contact Authorized Dealer.
- Always fasten the seat belt when operating the machine. If the seat belt is not fastened and the machine rolls over, the cab itself may be protected by the structure, but the operator may hit things inside the cab and/or be thrown outside the cab and end up under the machine.

The Roll-Over Protective Structure (ROPS)/ Falling Object Protective Structure (FOPS) certificates are valid under the following conditions.

- Must be under the maximum operating weight noted on the certificate.
- The protective structure must be mounted correctly.
- The protective structure must not be modified.
- The protective structure must not be damaged.

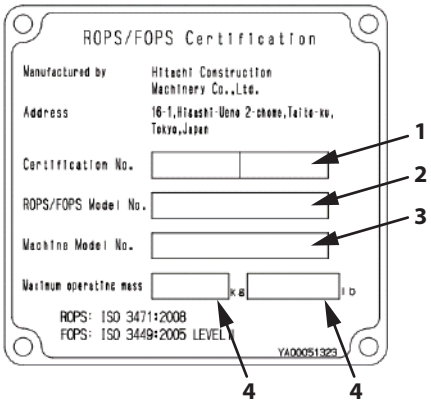

SSYA00051323-1 ja

1	Protective structure certificate number	2	Protective structure model number	3	Applicable model	4	Maximum machine operating weight guaranteed by the protective structure

Provide Signals for Jobs Involving Multiple Machines

- For jobs involving multiple machines, provide signals known and understood by all personnel involved. Also, appoint a signal person to coordinate the work. Make sure that all personnel obey the signal person's directions.

SA-481 ja

Keep Riders off Machine

- Riders on machine are subject to injury such as being struck by foreign objects or being thrown off the machine.
  - Only the operator should be on the machine. Keep riders off.
  - Riders also obstruct the operator's view, resulting in the machine being operated in an unsafe manner.

SA-427 ja

Caution with an Overhead Obstacle

- If the front attachment or any part of the machine comes in contact with an overhead obstacle, both the machine and the overhead obstacle may become damaged, and personal injury may result.
  - Take care to avoid coming in contact with overhead obstacles with the bucket or arm during operation.

Drive Safely

- Beware of the possibility of the machine slipping and/or turning over when driving on a slope.
  - When driving on level ground, hold the bucket at mark (A) 300 mm above the ground as illustrated.
  - Avoid traveling over any obstacles.
  - Drive the machine slowly when driving on rough terrain.
  - Avoid quick direction changes. Failure to do so may cause the machine to turn over.
  - If the engine stops while driving, the steering function becomes inoperative. Immediately stop the machine by applying the brake to prevent personal accident.

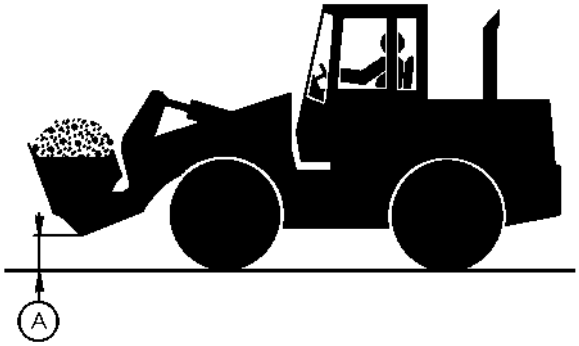

SA-448 ja

- If the machine is incorrectly operated while driving with the bucket loaded, turning over of the machine may result. Be sure to follow all the instructions indicated below.
  - When driving the machine on a job site with the bucket loaded, hold the bucket as low as possible to keep the machine balanced and to have good visibility.
  - Do not exceed the rated load capacity. Always operate the machine within the rated load capacity.
  - Avoid fast starts, stops, and quick turns. Failure to do so may result in personal injury and/or death.
  - Avoid rapid drive direction changes which could possibly cause personal injury and/or death.

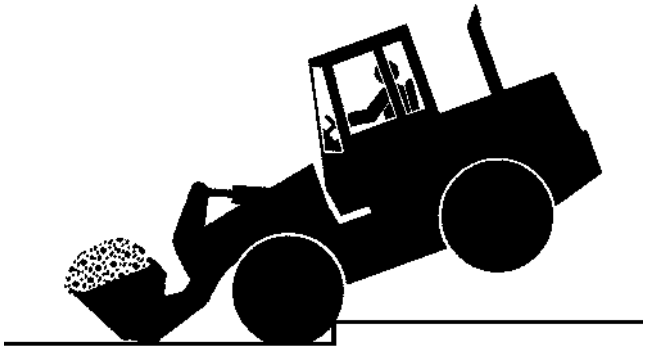

SA-400 ja

Drive Machine Safely (Work Site)

- Before driving the machine, always confirm that the steering wheel / and forward / reverse lever (switch) direction corresponds to the direction you wish to drive.
  - Be sure to detour around any obstructions.
- Driving on a slope may cause the machine to slip or overturn, possibly resulting in serious injury or death.
  - When driving up or down a slope, keep the bucket facing the direction of travel, approximately 200 to 300 mm above the ground.
  - If the machine starts to skid or becomes unstable, immediately lower the bucket to the ground and stop.
- Driving across the face of a slope or steering on a slope may cause the machine to skid or overturn. If the direction must be changed, move the machine to level ground, then, change the direction to ensure safe operation.

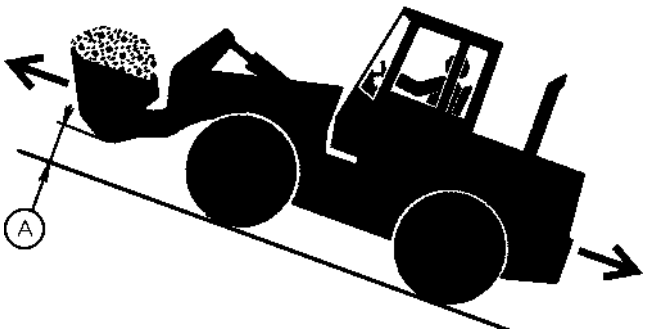

SA-449 ja

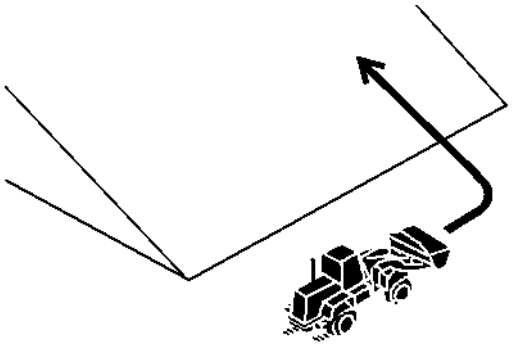

SA-450 ja

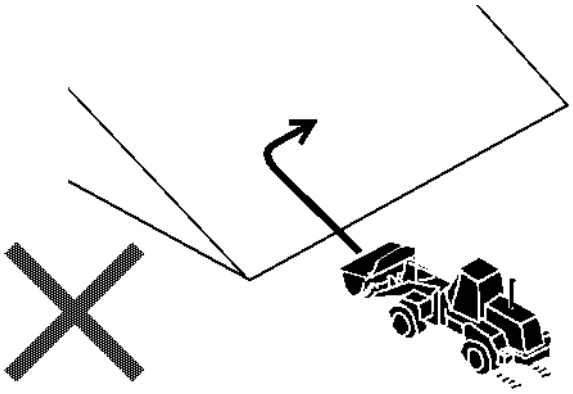

SA-451 ja

- Beware of the possibility of slipping or turning over the machine when driving on frozen snow surfaces.
  - The machine may slip more easily than expected on frozen snow surfaces even if the inclination is small. Reduce speed when driving. Avoid fast starts, stops and quick turns.
  - Road shoulder and/or set-up utilities covered with snow are difficult to locate. Make sure of their location before removing snow.
  - Be sure to use tire chains when driving on snow.
  - Avoid applying the brake for quick stops on snow. If a quick stop is required, lower the bucket to the ground.

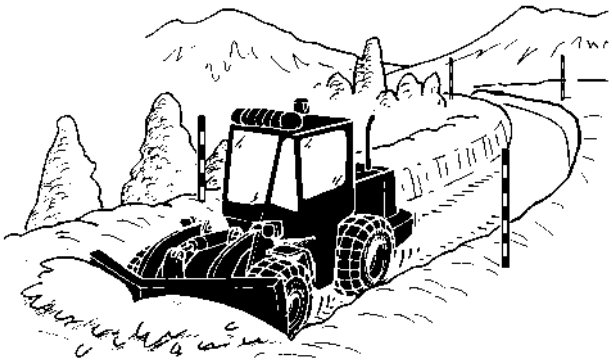

SA-452 ja

Travel on Public Roads Safely

- This machine is not allowed to drive on public roads with the bucket loaded.
  - Be sure to empty the bucket.
  - Hold the bucket at mark (A) 300 mm above the road surface as illustrated.

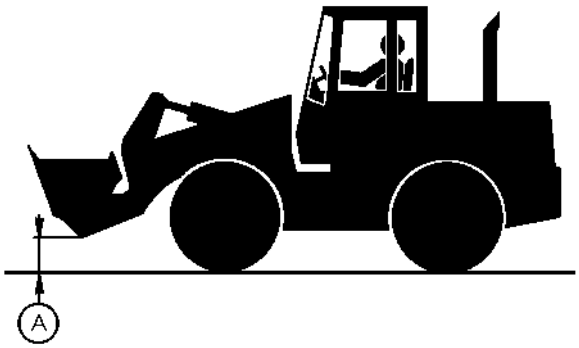

SA-453 ja

Avoid Injury from Roll Away Accidents

- Death or serious injury may result if you attempt to mount or stop a moving machine.
  To avoid roll away accidents:
  - Select level ground when possible to park machine.
  - Do not park the machine on a grade.
  - Lower the bucket to the ground.
  - Put the forward / reverse lever (switch) in neutral, and pull up the parking brake switch (lever) in the ON (parking brake) position.
  - Run the engine at low idle speed without load for 5 minutes to cool down the engine.
  - Stop the engine and remove the key from the key switch.
  - Turn the control lever lock switch to the lock position.
  - Block both tires and lower the bucket to the ground.
  - Position the machine to prevent rolling.
  - Park at a reasonable distance from other machines.

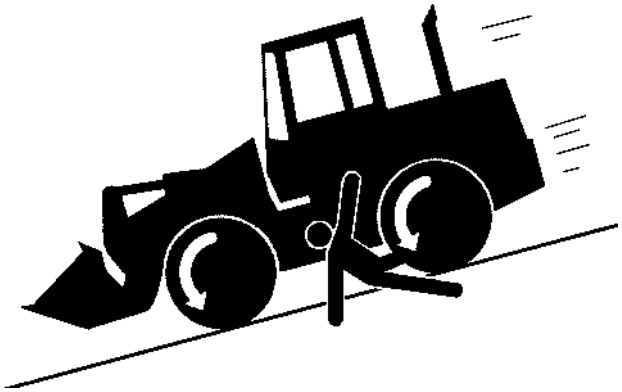

SA-457 ja

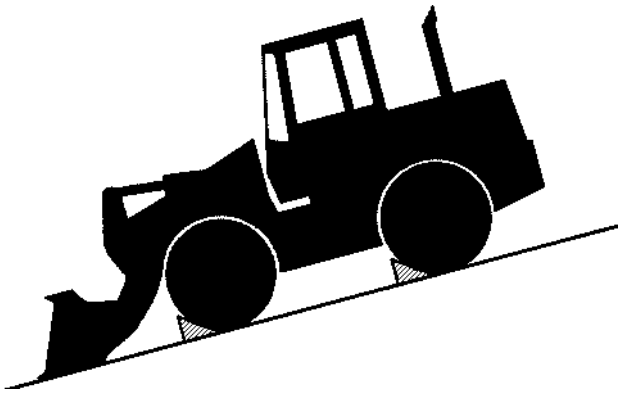

SA-458 ja

Avoid Accidents from Backing Up and Turning

- Make sure no one is working under or close to the machine before backing up or turning the machine to avoid personal injury and/or death by being run over or entangled in the machine.
  - Keep all personnel away from the machine by sounding the horn and/or using hand signals. Use extra care to be sure no one is in the articulation area before turning the machine.
  - Keep windows, mirrors, and lights in good condition.
  - Reduce travel speed when dust, heavy rain, fog, etc., reduce the visibility.
  - If good visibility is not obtained, use a signal person to guide you.

SA-383 ja

SA-312 ja

Avoid Positioning Bucket or Attachment Over Anyone

- Never allow the bucket or attachment to pass over coworkers and/or the dump truck operator' cab. Falling soil from the bucket or contact with bucket or attachment may cause serious personal accidents and/or damage to the machine.
  - Avoid carrying the bucket or attachment over the coworkers to ensure safe operation.

SA-518 ja

Avoid Tipping

DO NOT ATTEMPT TO JUMP CLEAR OF A TIPPING MACHINE. MACHINE WILL TIP OVER FASTER THAN YOU CAN JUMP FREE, POSSIBLY RESULTING IN SERIOUS PERSONAL INJURY OR DEATH. IF TIPPING OVER OF THE MACHINE IS EXPECTED, SECURELY HOLD THE STEERING WHEEL TO PREVENT YOUR BODY FROM BEING THROWN OUT OF THE MACHINE.

MACHINE WILL TIP OVER FASTER THAN YOU CAN JUMP FREE

FASTEN YOUR SEAT BELT

- The danger of tipping is always present when operating on a grade, possibly resulting in serious injury or death.

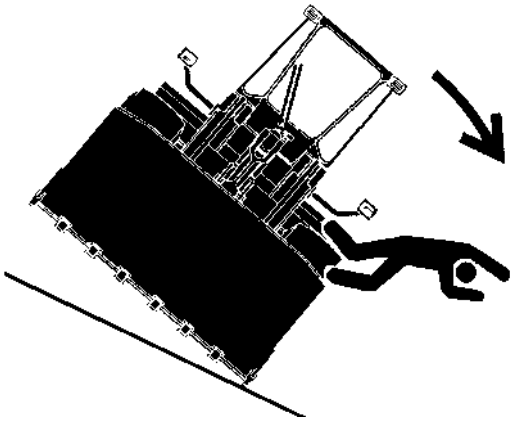

SA-463 ja

To avoid tipping:

- Be extra careful before operating on a gradient.
  - Prepare machine operating area flat.
  - Keep the bucket low to the ground and close to the machine.
  - Reduce operating speeds to avoid tipping or slipping.
  - Avoid changing direction when traveling on gradients.
  - If crossing the gradient is unavoidable, never attempt to travel across a gradient steeper than 5 degrees.
  - Reduce swing speed as necessary when swinging loads.
- Be careful when working on frozen ground.
  - Temperature increases will cause the ground to become soft and make ground travel unstable.

Never Undercut a High Bank

- The edges could collapse or a land slide could occur causing serious injury or death.

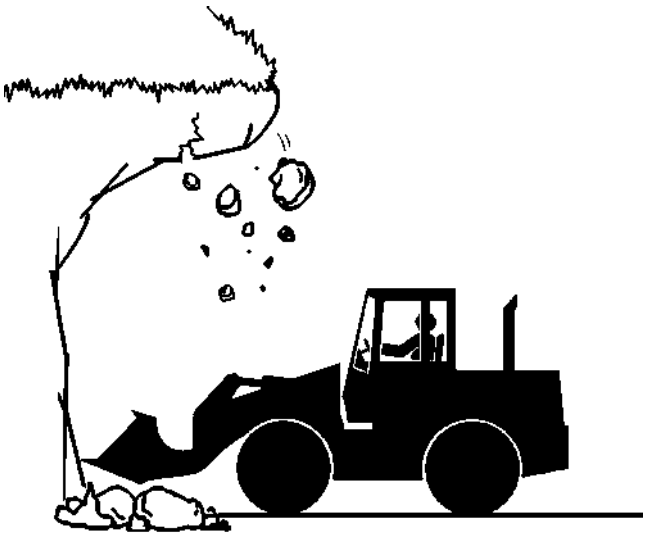

SA-519 ja

Dig with Caution

- Accidental damaging of underground cables or gas lines may cause an electric shock, explosion and/or fire, possibly resulting in serious injury or death.
  - Before digging, check the location of cables, gas lines, and water lines.
  - Keep the minimum distance required by law, from cables, gas lines, and water lines.
  - If a fiber optic cable is accidentally severed, do not look into the end. Doing so may result in serious eye injury.
  - Contact your local “diggers hot line”if available in your area , and/or the utility companies directly.
    Have them mark all underground utilities.

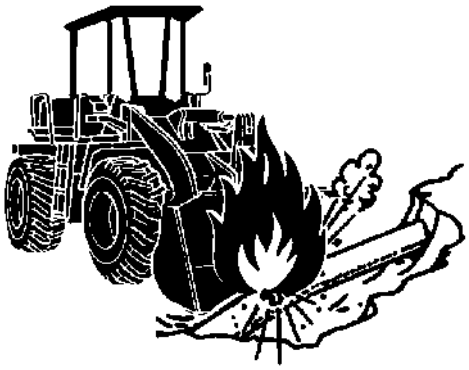

SA-396 ja

Perform Truck Loading Safely

- Do not operate the machine involuntarily. Unexpected machine movement may cause personal injury and/or death.
  - Do not lower the bucket with the lift arm control lever in the FLOAT position. The bucket may free fall, possibly causing personal injury and/or death.
  - Always select a level surface for truck loading.

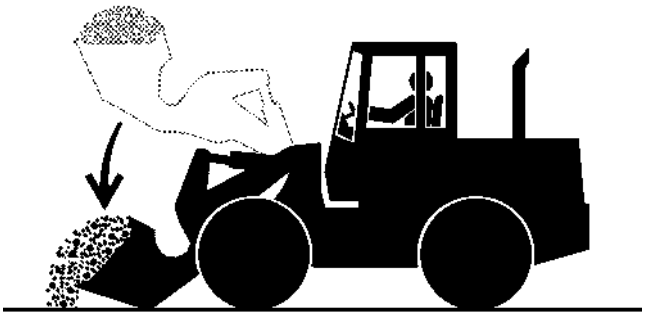

SA-397 ja

Avoid Power Lines

Serious injury or death can result from contact with electric lines.
When operating near an electric line, never move any part of the machine or load to within 3 m (10 ft) plus twice the line insulator length of overhead wires.

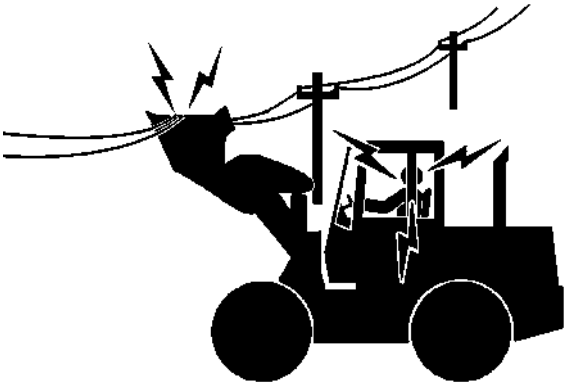

SA-455 ja

Precautions for Lightning

- Lightning may strike the machine.
  If lightning comes close, immediately stop the operation, and take the following action:
  - When you are around the machine or operating cabless machine, evacuate to a safe place far away from the machine.
  - When you are in the cab, stay in the cab until lightning has passed and safety is assured. Close the cab doors and windows. Lower the bucket to the ground and stop the engine. Put your hands on your lap to avoid contact with any metal surfaces. Never go out of the cab.

If lightning strikes the machine or near the machine, check all of the machine safety devices for any failure after lightning has passed and safety is assured. If any trouble is found, operate the machine only after repairing it.

SA-2825 ja

Object Handling

CRANING OPERATION USING THE MACHINE IS NOT ALLOWED.

- If a lifted load should fall, any person nearby may be struck by the falling load or may be crushed underneath it, resulting in serious injury or death.
  - Never attach a sling or chain to the bucket teeth or to the attachment (fork or grapple for example). They may come off, causing the load to fall.

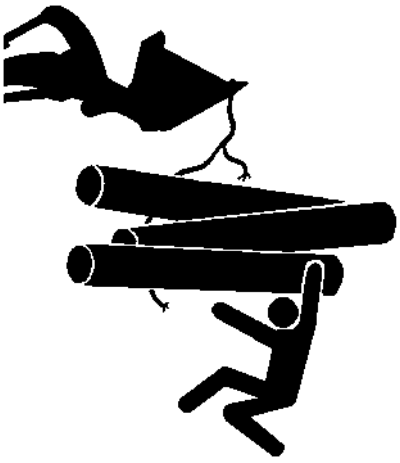

SA-132 ja

Protect Against Flying Debris and Falling Object

- During hammer operation, debris from earth, rock or metal may fly in all directions, resulting in a serious personal injury or death.
  - When driving the connecting pins in or out, wear hard hat and face shield, goggle or safety glasses.

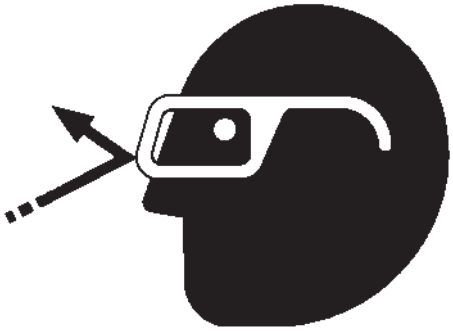

SA-432 ja

- During machine operation, debris from earth, rock or metal may fly off from the tire and bucket, potentially resulting in a serious injury or death.
  - Ensure nobody is present in or around the work area while machine is operating.

SA-344 ja

- Falling of accumulated earth or dirt onto people may result in a serious injury or death.
  - Before performing maintenance remove accumulated debris.

SA-527 ja

Park Machine Safely

- To avoid accidents:
  - Park machine on a firm, level surface.
  - Lower bucket to the ground.
  - Put the forward / reverse lever (switch) in neutral, and turn the parking brake switch (lever) ON (parking brake) position.
  - Run engine at slow idle speed without load for 5 minutes.
  - Turn key switch to OFF to stop engine.
  - Remove the key from the key switch.
  - Turn the control lever lock switch to the lock position.
  - Close windows, roof vent, and cab door.
  - Lock all access doors and compartments.

SA-456 ja

Handle Fluids Safely–Avoid Fires

- Handle fuel with care; it is highly flammable. If fuel ignites, an explosion and/or a fire may occur, possibly resulting in serious injury or death.
  - Do not refuel the machine while smoking or when near open flame or sparks.
  - Always stop the engine before refueling the machine.
  - Fill the fuel tank outdoors.
  - Discharge static electricity before fueling.
- All fuels, most lubricants, and some coolants are flammable.
  - Store flammable fluids well away from fire hazards.
  - Do not incinerate or puncture pressurized containers.
  - Do not store oily rags on the machine; they can ignite and burn spontaneously.
  - Securely tighten the fuel and oil filler caps.

SA-018 ja

SA-019 ja

Transport Safely

- Take extra care when loading or unloading the machine onto or from a truck or trailer as the machine may turn over.
  - Observe the related regulations and rules for safe transportation.
  - Confirm length, width, height and weight of the machine and select an appropriate truck or trailer for the machine to be transported.
  - Be sure to use a signal person.
  - Always follow the following precautions for loading or unloading:

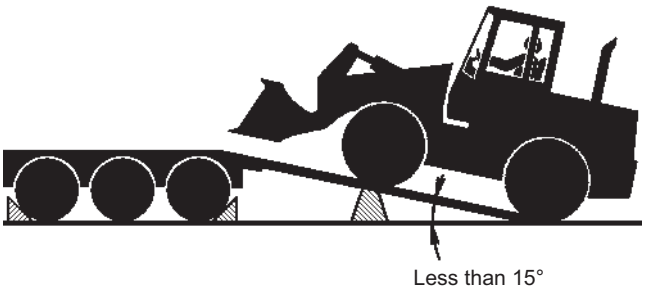

SA-454-1 en_GB

1. Place machine and truck or trailer on solid and level ground.
2. Always use a ramp or deck strong enough to support the machine weight to drive on or from a truck or trailer.
3. Fasten operator's seat belt before starting driving the machine.
4. Use the low speed gear.
5. To avoid instability, never load or unload the machine onto or off a truck or trailer using the front attachment functions when driving up or down the ramp.
6. Never steer the machine while on the ramp. If the traveling direction must be changed while on the ramp, unload the machine from the ramp, reposition the machine on the ground, then try loading again.
7. At the top end of the ramp where it meets the flatbed, there is a change in angle. Take care when traveling over it.The machine will tip forward or backward.
8. After loading, install the lock bar to securely hold the articulation mechanism.
9. Place blocks in front of and behind the tires of the machine, if applicable. Securely fasten the machine to the truck or trailer deck with wire ropes.

Be sure to further follow the details described in the "TRANSPORTING" section.

Practice Maintenance Safely

- To avoid accidents:
  - Understand service procedures before starting work.
  - Keep the work area clean and dry.
  - Do not spray water or steam inside cab.
  - Never lubricate or service the machine while the engine is running.
  - Keep hands, feet and clothing away from moving parts.

SA-028 ja

Before servicing the machine:

1. Park the machine on a level surface.
2. Lower the bucket to the ground.
3. Run the engine at low idle speed without load for 5 minutes.
4. Turn the key switch to OFF to stop engine.
5. Relieve the pressure in the hydraulic system according to the pressure relief procedure. (Refer to chapter-5 "Guide to Releasing Pressure in the Hydraulic Circuit".)
6. Remove the key from the key switch.
7. Attach a "Do Not Operate" tag on the control lever.
8. Turn the control lever lock switch to the lock position.
9. Lock bar connects the front and rear frames.
10. Allow the engine to cool.

SA-312 ja

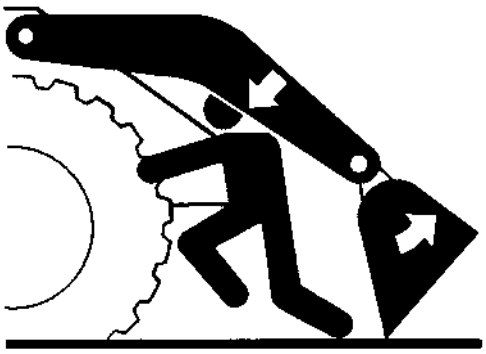

SA-134 ja

- If a maintenance procedure must be performed with the engine running, do not leave the machine unattended.
- Never work under a machine raised by the lift arm.
- Inspect the machine periodically in accordance with the "MAINTENANCE" chapter of this manual and repair or replace as necessary.
- Keep all parts in good condition and properly installed.
- Fix damage immediately. Replace worn or broken parts. Remove any buildup of grease, oil or debris.
- When cleaning parts, always use nonflammable detergent oil. Never use highly flammable oil such as fuel oil or gasoline to clean parts or surfaces.

SA-527 ja

- Turn the battery disconnect switch to OFF before maintaining the electrical systems or performing welding on the machine.
- Sufficiently illuminate the work site. Use a maintenance work light when working under or inside the machine.
- Always use a work light protected with a guard. If the light bulb is broken, spilled fuel, oil, antifreeze fluid, or window washer fluid may catch fire.

SA-037 ja

Warn Others of Service Work

- Unexpected machine movement can cause serious injury.
  - Before performing any work on the machine, attach a "Do Not Operate" tag on the control lever.
    This tag is available from Authorized Dealer.

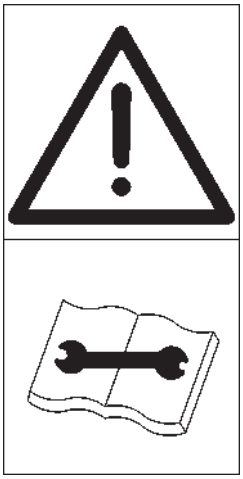

SS2045102-4 ja

Support Machine Properly

- Never attempt to work on the machine without securing the machine first.
  - Always lower the attachment to the ground before you work on the machine.
  - If you must work on a lifted machine or attachment, securely support the machine or attachment. Do not support the machine on cinder blocks, hollow tires, or props that may crumble under continuous load. Do not work under a machine that is supported solely by a jack.

SA-527 ja

Stay Clear of Moving Parts

- Entanglement in moving parts can cause serious injury.
  - To prevent accidents, do not remove guards to ensure that hands, feet, clothing, jewelry and hair do not become entangled when working around rotating parts.

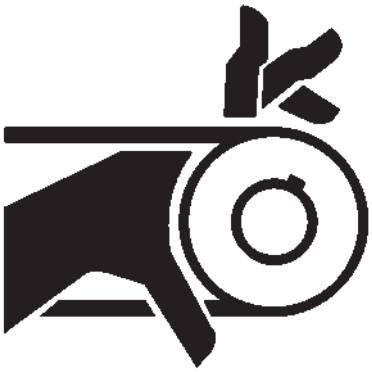

SA-026 ja

SA-2294 ja

Support Maintenance Properly

- Explosive separation of a tire and rim parts can cause serious injury or death.
  - Do not attempt to mount a tire unless you have the proper equipment and experience to perform the job. Have it done by Authorized Dealer or a qualified repair service.
  - Always maintain the correct tire pressure. DO NOT inflate tire above the recommended pressure.
  - When inflating tires, use a chip-on chuck and extension hose long enough to allow you to stand to one side and not in front of or over the tire assembly. Use a safety cage if available.
  - Inspect tires and wheels daily. Do not operate with low pressure, cuts bubbles, damaged rims, or missing lug bolts and nuts.
  - Never cut or weld on an inflated tire or rim assembly. Heat from welding could cause an increase in pressure and may result in tire explosion.

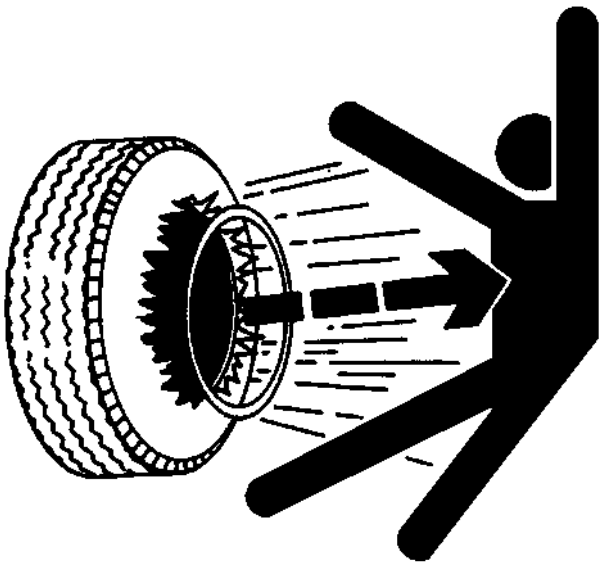

SA-249 ja

Prevent Parts from Flying

- Travel reduction gears are under pressure.
  - As pieces may fly off, be sure to keep body and face away from AIR RELEASE PLUG to avoid injury.
  - GEAR OIL is hot. Wait for GEAR OIL to cool, then gradually loosen AIR RELEASE PLUG to release pressure.

SA-344 ja

Avoid Injury from Attachment Falling Accident

- Stored attachments such as buckets, hydraulic hammers, and blades can fall and cause serious injury or death.
  - Securely store attachments and implements to prevent falling. Keep children and bystanders away from storage areas.

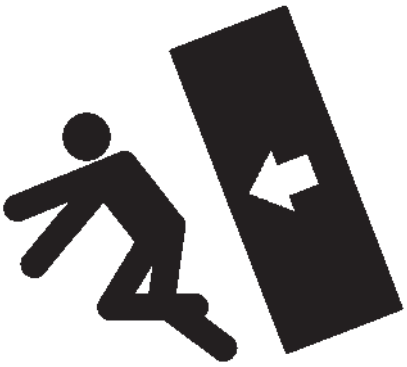

SA-034 ja

Prevent Burns

Hot spraying fluids:

- After operation, engine coolant is hot and under pressure. Hot water or steam is contained in the engine, expansion tank and heater lines.
  Skin contact with escaping hot water or steam can cause severe burns.
  - Avoid possible injury from hot spraying water. DO NOT remove the expansion tank cap until the engine is cooled down. When opening, turn the cap slowly to the first stop. Allow all pressure to be released before removing the cap.

SA-039 ja

Hot fluids and surfaces:

- Engine oil, gear oil and hydraulic oil also become hot during operation.
  The engine, hoses, lines and other parts become hot as well.
- Wait for the oil and components to cool down before starting any maintenance or inspection work.

SA-225 ja

Replace Rubber Hoses Periodically

- Rubber hoses under pressure may break due to aging, fatigue, and abrasion. It is very difficult to gauge the extent of deterioration of rubber hoses by inspection alone. Therefore:
  - Periodically replace the rubber hoses. (See the page of "Periodic replacement of parts" in the operator's manual.)
- Failure to periodically replace rubber hoses may cause a fire, fluid injection into skin, or the front attachment to fall, which may result in serious injury or death.

SA-019 ja

Avoid High-Pressure Fluids

- Fluids such as diesel fuel or hydraulic oil under pressure can penetrate the skin or eyes causing serious injury, blindness or death.
  - Avoid this hazard by relieving pressure before disconnecting hydraulic or other lines.
  - Tighten all connections before applying pressure.
  - Search for leaks with a piece of cardboard; take care to protect hands and body from high-pressure fluids. Wear a face shield or goggles for eye protection.
  - If an accident occurs, see medical assistance immediately. Any fluid injected into the skin must be surgically removed within a few hours or gangrene may result.

SA-031 ja

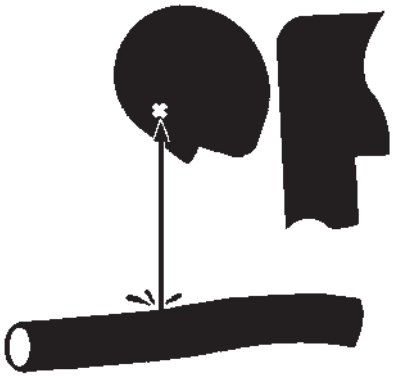

SA-292 ja

SA-044 ja

Prevent Fires

Check for Oil Leaks:

- Fuel, hydraulic oil and lubricant leaks can cause fires.
  - Check for oil leaks due to missing or loose clamps, kinked hoses, damaged lines or hoses that rub against each other, damage to the oil cooler, and loose oil cooler flange bolts.
  - Tighten, repair or replace any missing, loose or damaged clamps, lines, hoses, oil cooler and oil cooler flange bolts.
  - Do not bend or strike high-pressure lines.
  - Never install bent or damaged lines, pipes, or hoses.
  - Replace fuel hoses and hydraulic hoses periodically even if there is no abnormality in their external appearance.

SA-019 ja

Check for Short circuits:

- Short circuits can cause fires.
  - Clean and tighten all electrical connections.
  - Check before each shift or after eight (8) to ten (10) hours operation for loose, kinked, hardened or damaged electrical cables and wires.
  - Check before each shift or after eight (8) to ten (10) hours operation for missing or damaged terminal caps.
  - DO NOT OPERATE MACHINE if cable or wires are loose, kinked, etc.
  - Never attempt to modify electric wirings.

Clean up Flammable Materials:

- Spilled fuel and oil, trash, grease, debris, accumulated dust (such as coal, wood, paper), and other flammable materials may cause fires.
  - Prevent fires by inspecting and cleaning the machine daily, in particular clean high temperature parts such as the exhaust outlet and muffler.
  - Do not wrap high temperature parts such as a muffler or exhaust pipe with oil absorbents.
  - Do not store oily cloths on the machine as they are vulnerable to catching fire.
  - Keep flammable materials away from sparks, hot surfaces, exhaust gases or open flames.
  - Wire screens may be provided for openings in the engine compartment covers to prevent larger flammable materials such as dead leaves from entering. However, small flammable materials which can pass through the wire screen may cause fires. Check and clean the machine every day and immediately remove accumulated flammable materials.

Check Key Switch:

- If a fire breaks out, failure to stop the engine will escalate the fire, hampering fire fighting.
  - Always check key switch function before operating the machine every day:
    1. Start the engine and run it at slow idle.
    2. Turn the key switch to the OFF position to confirm that the engine stops.
  - If any abnormalities are found, be sure to repair them before operating the machine.

Check Heat Shields:

- Damaged or missing heat shields may cause fires.
  - Damaged or missing heat shields must be repaired or replaced before operating the machine.
  - If hydraulic hoses break while the engine cover is open, splattered oil on the high temperature parts such as muffler may cause fire. Always keep the engine cover closed while operating the machine.

Evacuating in Case of Fire

- In case of fire, evacuate the machine in the following way:
  - Stop the engine by turning the key switch to the OFF position if there is time.
  - Leave the machine
  - Use a fire extinguisher if there is time.
- In an emergency, if the cab door can not be opened, break the front or rear window panes with the emergency evacuation hammer to escape from the cab. Refer to the explanation pages on the Emergency Evacuation Method.

SA-393 ja

SS-1510 ja

Beware of Exhaust Fumes

- Prevent asphyxiation. Engine exhaust fumes can cause sickness or death.
  - If you must operate the machine in a building, be sure there is adequate ventilation.
  - White smoke may be generated during the aftertreatment device regeneration. Do not perform aftertreatment device manual regeneration indoor.

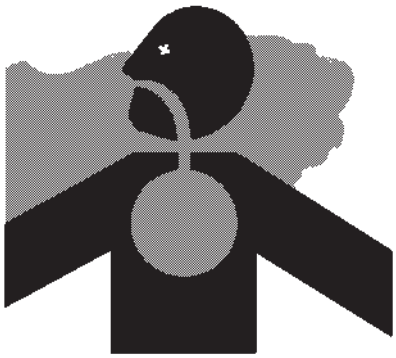

SA-016 ja

Precautions for Welding and Grinding

- Welding may generate gas and/or small fires.
  - Be sure to perform welding in a well ventilated and prepared area. Store flammable materials in a safe place before starting welding.
  - Only qualified personnel should perform welding. Never allow an unqualified person to perform welding.
  - Turn the battery disconnect switch to the OFF position before performing welding on the machine.
- Grinding on the machine may create fire hazards. Store flammable materials in a safe place before starting grinding.

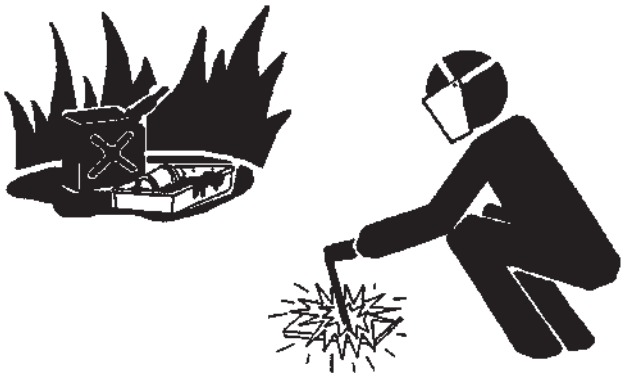

SA-818 ja

- After finishing welding and grinding, recheck that there are no abnormalities such as the area surrounding the welded area still smoldering.

Avoid Heating Near Pressurized Fluid Lines

- Flammable spray can be generated by heating near pressurized fluid lines, resulting in severe burns to yourself and bystanders.
  - Do not heat by welding, soldering, or using a torch near pressurized fluid lines or other flammable materials.
  - Pressurized lines can be accidentally cut when heat goes beyond the immediate flame area. Install temporary fire-resistant guards to protect hoses or other materials before engaging in welding, soldering, etc.

SA-030 ja

Avoid Applying Heat to Lines Containing Flammable Fluids

- Do not weld or cut pipes or tubes that contain flammable fluids.
- Clean pipes and tubes thoroughly with non-flammable solvent before welding or cutting.

Precautions for Handling Accumulator and Gas Damper

High-pressure nitrogen gas is sealed in the accumulator and the gas damper. Inappropriate handling may cause explosion, possibly resulting in serious injury or death.

Strictly comply with the following items:

- Do not disassemble the unit.
- Keep the units away from open flames and fire.
- Do not bore a hole or cut the unit.
- Avoid giving shocks to the unit.
- Respect the environment when disposing the unit. Consult Authorized Dealer.

Precautions for Diesel Exhaust Fluid (DEF)

- Diesel exhaust fluid (DEF), commonly referred to as AdBlue®, is an aqueous urea solution used as a consumable in selective catalytic reduction (SCR) to lower NOx concentration in the exhaust emissions from the engine.
  It is a non-flammable and non-hazardous solution, and harmful effects are not expected under normal conditions of use.
- In case of a fire, DEF would decompose and generate ammonia gas when heated to 160 °C (320 °F) or higher. Ammonia gas may cause lung injury and potentially is fatal if inhaled. It is a corrosive gas and the liquefied gas can cause frostbite and corrosive injury to eyes and skin.
  In case of contact, immediately flush skin with plenty of water at least 15 minutes while removing contaminated clothing. Get medical attention if symptoms occur.
- DEF is corrosive to steel, aluminium, copper and brass, etc. If DEF is spilled on your vehicle, wipe off and rinse with water.
- For the handling of DEF, follow handling precautions on Material Safety Data Sheet. Have suitable emergency equipment for fires, spills and leaks readily available. Practice good housekeeping. Maintain handling equipment. Comply with applicable regulations.

Remove Paint Before Welding or Heating

- Hazardous fumes can be generated when paint is heated by welding, soldering or using a torch. If inhaled, these fumes may cause sickness.
  - Avoid potentially toxic fumes and dust.
  - Work outside in a well-ventilated area. Dispose of paint and solvent properly.
  - Remove paint before welding or heating:
    1. If you sand or grind paint, avoid breathing the dust.
       Wear an approved respirator.
    2. If you use solvent or paint stripper, remove stripper with soap and water before welding. Remove solvent or paint stripper containers and other flammable materials from area. Allow fumes to disperse at least 15 minutes before welding or heating.

SA-029 ja

Beware of Asbestos and Silica Dust and Other Contamination

- Take care not to inhale dust produced in the work site. Keep cabin door and windows closed and install additional filtration systems if necessary.
  - Depending on the work site conditions, the risk of inhaling asbestos fiber, silica dust or other contaminations may exist.
  - Keep bystanders out of the work site during operation.

SA-029 ja

Prevent Battery Explosions

- Battery gas can explode.
  - Keep sparks, and flames away from the top of battery.
  - Never check battery charge by placing a metal object across the posts. Use a voltmeter or hydrometer.
  - Do not charge a frozen battery; it may explode. Gently warm the battery to 16 ˚C (60 ˚F) first.
  - Do not continue to use or charge the battery when electrolyte level is lower than specified. Explosion of the battery may result.
  - Loose terminals may produce sparks. Securely tighten all terminals.
  - Connect terminals to the correct electrical poles. Failure to do so may cause damage to the electrical parts or fire.

SA-032 ja

- Battery electrolyte is poisonous. If the battery should explode, battery electrolyte may be splashed into eyes, possibly resulting in blindness.
  - Be sure to wear eye protection when checking electrolyte specific gravity.

Service Air Conditioning System Safely

- If air conditioner refrigerant contacts your eyes or skin, it could potentially cause blindness or frostbite.
  - Refer to the instructions described on the container for proper use when handling the refrigerant.
  - Use a recovery and recycling system to avoid leaking refrigerant into the atmosphere.
  - Never touch the refrigerant.

SA-405 ja

Handle Chemical Products Safely

- Direct exposure to hazardous chemicals can cause serious injury. Potentially hazardous chemicals used with your machine include such items as lubricants, coolants, paints, and adhesives.
  - Safety Data Sheet (SDS) provides specific details on chemical products: physical and health hazards, safety procedures, and emergency response techniques.
  - Check the SDS before you start any job using a hazardous chemical. That way you will know exactly what the risks are and how to do the job safely. Then follow procedures and use recommended equipment.

SA-2579 ja

  - See Authorized Dealer for SDS's (available only in English) on chemical products used with your machine.

Dispose of Waste Properly

- Improperly disposing of waste can threaten the environment and ecology. Potentially harmful waste used with Hitachi Construction Machinery equipment includes such items as oil, fuel, coolant, DEF, brake fluid, filters, and batteries.
  - Use leakproof containers when draining fluids. Do not use food or beverage containers that may mislead someone into drinking from them.
  - Do not pour waste onto the ground, down a drain, or into any water source.
  - Air conditioning refrigerants escaping into the air damage the Earth's atmosphere. Government regulations may require a certified air conditioning service center to recover and recycle used air conditioning refrigerants.

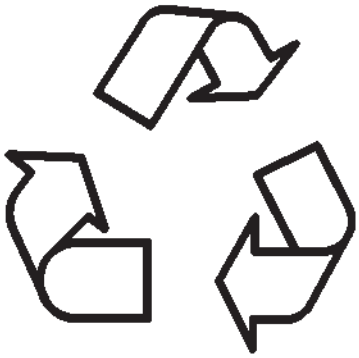

SA-226 ja

  - Inquire on the proper way to recycle or dispose of waste from your local environmental or recycling center, or from Authorized Dealer.

Never Ride Attachment

Never allow anyone to ride on attachments or the load. This is an extremely dangerous practice.

Notes on Aftertreatment Device

The aftertreatment device removes particulate matter (PM) and NOx (Nitrogen Oxide) from the exhaust gas. Do not make any modifications affecting the functionality of the aftertreatment device. In case of damage to the aftertreatment device, have its functionality checked by Authorized Dealer.

Exhaust gas from the aftertreatment device, muffler, exhaust piping and tail piping becomes hot during and right after engine running and regeneration of aftertreatment device. Keep away from the exhaust system or hot gas from the exhaust piping during regeneration. Be careful to avoid skin contact with exhaust gas or hot sufaces. It may cause severe burns.

- White smoke may be generated during aftertreatment device regeneration. Do not attempt to perform aftertreatment device manual regeneration in a badly ventilated area.
- Do not touch water coming directly out of the aftertreatment device. The water is mildly-acidic by oxidation catalyst mounted in the aftertreatment device. If filter water spills on your skin, immediately flush with clean water.

Precautions for Communication Terminal

- Non-compliant radio communication equipment and associated parts, and/or improper installation of radio communication equipment may affect and disturb the machine's electronic parts, potentially causing involuntary movement of the machine.
- Improper installation of electrical equipment may cause machine failure and/or a fire on the machine.
- Be sure to consult Authorized Dealer when installing radio communication equipment or additional electrical parts, or when replacing electrical parts.

Never attempt to disassemble or modify the electrical/electronic components. If replacement or modification of such components is required, contact Authorized Dealer.

Precautions for Communication Terminal Equipment

This machine is installed with a communication terminal emitting radio waves behind the operator's seat. There is a possibility that a medical device, including an implantable device such as a cardiac pacemaker, could be affected and malfunction due to the electrical waves emitted from the communication terminal.

For those who uses medical devices as above should adjust the operator's seat position to keep the distance between medical device and the communication terminal are at least 15 centimeters (6 inches) at all times. If this condition cannot be met, please contact Authorized Dealer and have the person in charge stop the communication terminal from functioning completely and confirm that no radio waves are emitted before operating the machine.

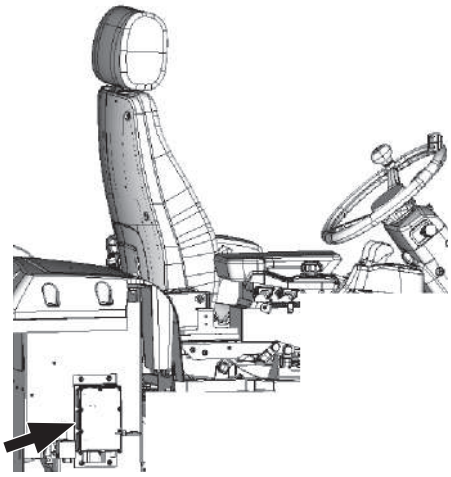

MNUD-00-005-1 ja

The effect of radio waves from communication terminal on the human body can be evaluated by measuring Specific Absorption Rate ("SAR"), which is a measure of the amount of radio frequency energy absorbed by the body when using a wireless application such as a mobile phone.
All communication terminal installed in this machine comply with technical standards and international guidelines regarding the absorption of radio waves by the human body.

There are two SAR measurement method and the safety standards, 2.0 W/kg (measured by 10 g per unit) and 1.6 W/kg (measured by 1 g per unit), either one is adopted depending on the country.

This machine is equipped with a communication terminal model HPRO-100, HPRO-4G, HPRO-4G V2 or QConnect. Consult Authorized Dealer for the model of communication terminal.

Specific Absorption Rate ("SAR") of communication terminal.
The values in ( ) are based on Taiwanese regulations.

	HPRO-100	HPRO-4G *	HPRO-4G V2	QConnect *
1.6 W/kg (1 g/unit)	0.51 W/kg	0.91 W/kg	0.74 W/kg	-
2.0 W/kg (10 g/unit)	0.12 W/kg	0.50 W/kg	0.44 W/kg	-
		(0.31 W/kg)		(0.25 W/kg)

This data was measured by having each type of communication terminal used with this machine, and a human body set apart by 3 centimeters (1.18 inches).

Precautions in Taiwan*: Under the Taiwanese regulations, the maximum SAR value is set as the standard value 2 W/kg. The actual measurement value is 0.25 W/kg using QConnect, and 0.31 W/kg using HPRO-4G.

- Do not attempt to disassemble, repair, modify or relocate the communication terminal, antenna and cables. This may cause damage or fire on the machine and the communication terminal. (Before removing or installing the communication terminal, consult Authorized Dealer.)
- Do not pinch or forcibly pull cables, cords and connectors. This may cause damage or fire on the machine and the communication terminal due to short/broken circuit.

Precautions for Aerial Angle (If Equipped)

WARNING

- **The aerial angle is a system that assists in checking obstacles. Do not operate the machine only by looking at the aerial angle images, but check the surroundings with your own eyes.**
- **Some areas cannot be displayed on the monitor by the camera, and the monitor image has a blind spot. Also, the actual appearance may differ from the images displayed on the monitor.**
- **Do not operate the monitor while driving or operating the machine.**

If you do not properly understand this nature of the aerial angle images, you may cause serious property damage or personal injury.

Precautions for Rear Obstacle Detection System (If Equipped)

WARNING

- **Do not rely on the rear camera and radar object detection system to determine if personnel are behind the machine.**
- **The system has limitations due to maintenance practices, environmental conditions, and operating range.**

The obstacle detection system is designed to enhance the operator's awareness of the machine surroundings. Use of this system does not replace basic safety precautions and procedures for operating the machine.

IMPORTANT

Perform operational check of radar object detection (ROD) system properly. Inspect and clean camera lens and ROD system sensor face. Refer to "MAINTENANCE" section for the procedures.

Please be noticed that detection area shape, size, relative location, and composition varies according to operational and external factors, such as weather, interference, presence of other systems.

Visibility Map for Machine Model ZW140-7 Personal Hazard

This machine complies with the essential health and safety requirements for visibility set out by Machinery Directive 2006/42/EC. The map shows the residual masking (blind spots) observed by a seated operator (wearing the recommended seat restraint) in the cab using direct vision and the standard visual aids supplied with the machine. Additionally, operators are encouraged to adjust the mirrors provided to the machine to show the area as shown below.

This map shows an approximation of the residual masking. This can be used as a guide when conducting a site risk assessment, utilized for site management and to consider additional visual aids.

Conditions: Driver's visibility on 1mRB and VTC are evaluated under ISO 5006.

Test Height (on 1mRB):	1.2 m to 1.5 m
(1mRB to VTC/on VTC):	Ground Level
Operator eye Height:	1.2 m from the cab floor
Machine Configuration:	Standard/High lift arm
Machine Position:	Travel Position (For the detail position, see the image below)
Applicable visual aids:	1. Standard mirror (s)
	2. Standard rear view camera

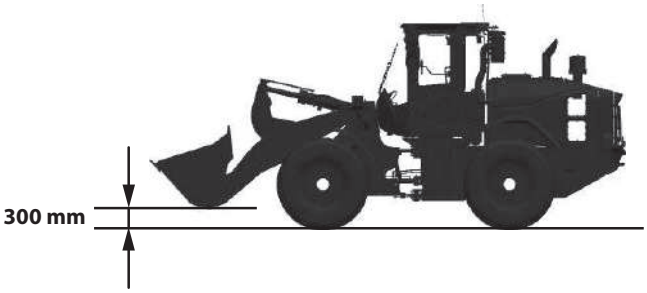

Machine Position Image

MNTL-VM-008-1 en_GB

⊗ : Operator's eye point
A : 1 m Rectangular Boundary (1mRB)
B : 12 m Visibility Test Circle (VTC)
a : Standard Mirror (s)
b : Standard rear view camera

: Masking area
: Mirror visibility
: Camera visibility
: Masking on 1mRB/VTC

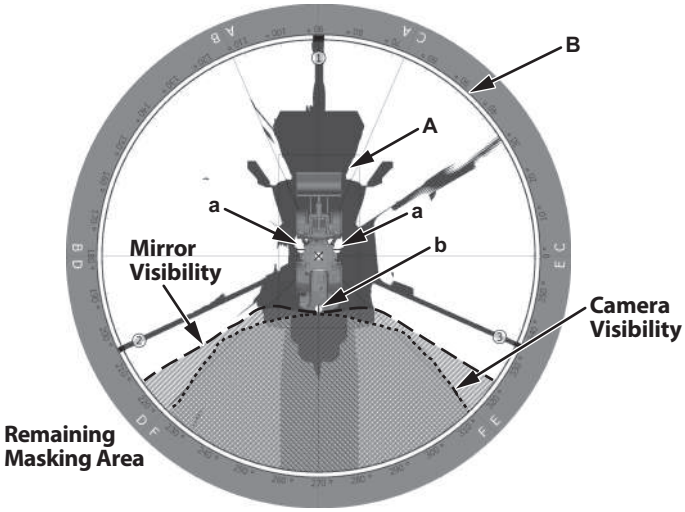

Visibility Map

MNTL-VM-009-1 en_GB

Visibility Map for Machine Model ZW160-7 Personal Hazard

This machine complies with the essential health and safety requirements for visibility set out by Machinery Directive 2006/42/EC. The map shows the residual masking (blind spots) observed by a seated operator (wearing the recommended seat restraint) in the cab using direct vision and the standard visual aids supplied with the machine. Additionally, operators are encouraged to adjust the mirrors provided to the machine to show the area as shown below.

This map shows an approximation of the residual masking. This can be used as a guide when conducting a site risk assessment, utilized for site management and to consider additional visual aids.

Conditions: Driver's visibility on 1mRB and VTC are evaluated under ISO 5006.

Test Height (on 1mRB):	1.2 m to 1.5 m
(1mRB to VTC/on VTC):	Ground Level
Operator eye Height:	1.2 m from the cab floor
Machine Configuration:	Standard/High lift arm
Machine Position:	Travel Position (For the detail position, see the image below)
Applicable visual aids:	1. Standard mirror (s) 2. Standard rear view camera

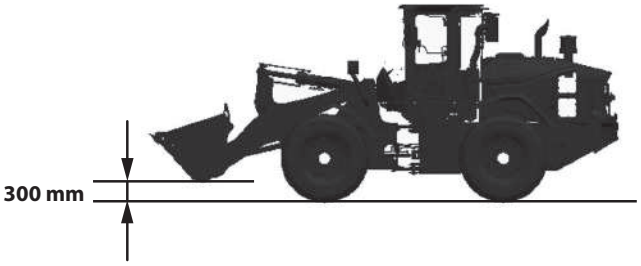

Machine Position Image

MNTL-VM-001 ja

⊗ : Operator's eye point
A : 1 m Rectangular Boundary (1mRB)
B : 12 m Visibility Test Circle (VTC)
a : Standard Mirror (s)
b : Standard rear view camera

: Masking area
: Mirror visibility
: Camera visibility
: Masking on 1mRB/VTC

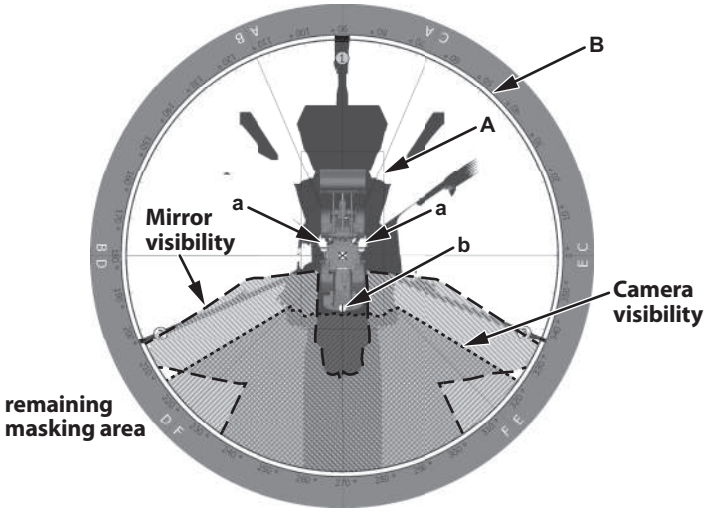

Visibility Map

MNTL-VM-002-1 en_GB

Visibility Map for Machine Model ZW160PL-7 Personal Hazard

This machine complies with the essential health and safety requirements for visibility set out by Machinery Directive 2006/42/EC. The map shows the residual masking (blind spots) observed by a seated operator (wearing the recommended seat restraint) in the cab using direct vision and the standard visual aids supplied with the machine. Additionally, operators are encouraged to adjust the mirrors provided to the machine to show the area as shown below.

This map shows an approximation of the residual masking. This can be used as a guide when conducting a site risk assessment, utilized for site management and to consider additional visual aids.

Conditions: Driver's visibility on 1mRB and VTC are evaluated under ISO 5006.

Test Height (on 1mRB):	1.2 m to 1.5 m
(1mRB to VTC/on VTC):	Ground Level
Operator eye Height:	1.2 m from the cab floor
Machine Configuration:	Standard/High lift arm
Machine Position:	Travel Position (For the detail position, see the image below)
Applicable visual aids:	1. Standard mirror (s) 2. Standard rear view camera

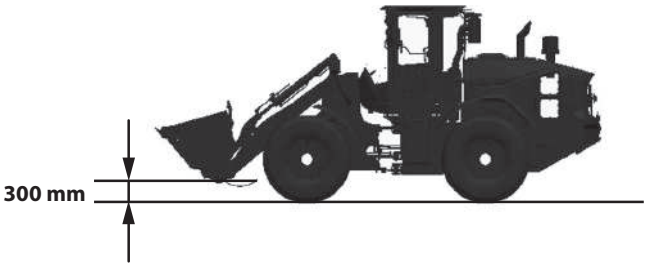

Machine Position Image

MNTL-VM-003 ja

⊗ : Operator's eye point
A : 1 m Rectangular Boundary (1mRB)
B : 12 m Visibility Test Circle (VTC)
a : Standard Mirror (s)
b : Standard rear view camera

: Masking area
: Mirror visibility
: Camera visibility
: Masking on 1mRB/VTC

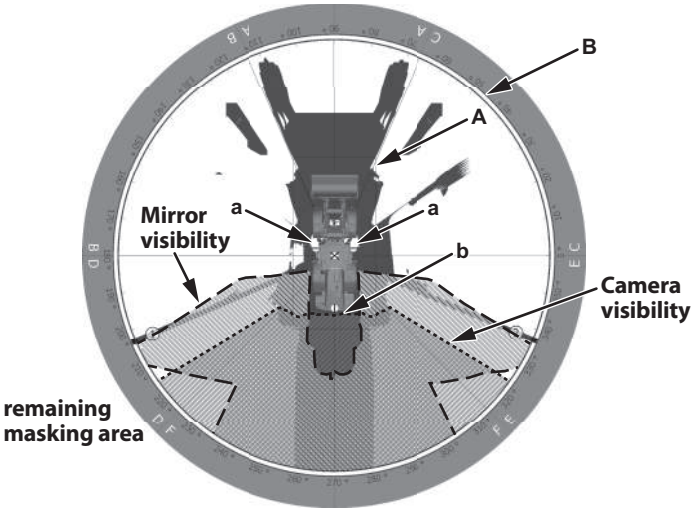

Visibility Map

MNTL-VM-004-1 en_GB

Visibility Map for Machine Model ZW140-7, 160-7, 160PL-7 Aerial Angle (Surround View) (Optional)

This map shows the area where a person 1.6m tall is displayed on the monitor screen in a recognizable size, minimal 7.0 mm according to ISO 16001. This map can be used as a guide when conducting a site risk assessment.

NOTE

local circumstances, contrast between colours, light intensity etc. may affect Visibility performance.

Area where a person is recognizably displayed on the monitor

⊗ : measurement center point

● : location where 1.6 m person shown as minimal 7 mm on the monitor

Monitor Display (Basic Mode)

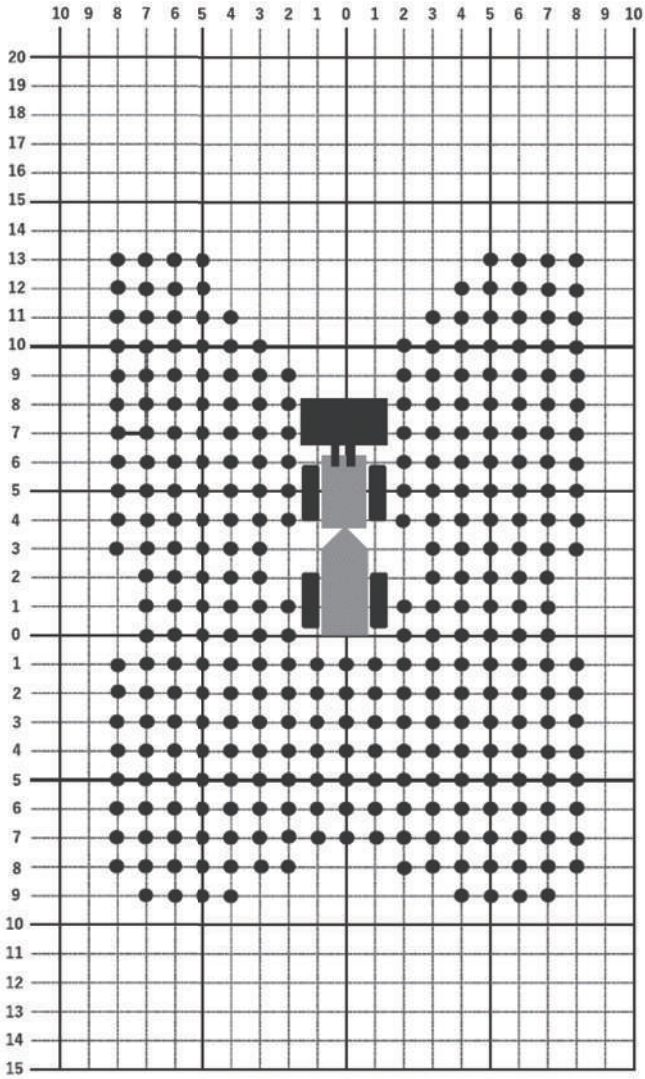

Aerial Angle Visibility Map
"Surrounding Image + Image to Rear"

MNTL-VM-005 en_GB

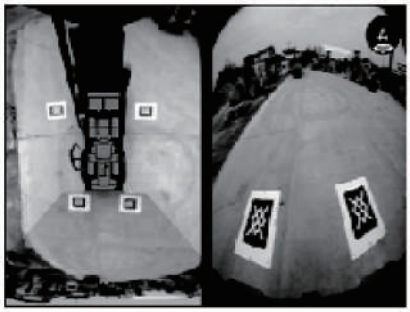

Monitor Display (Full Screen Mode)

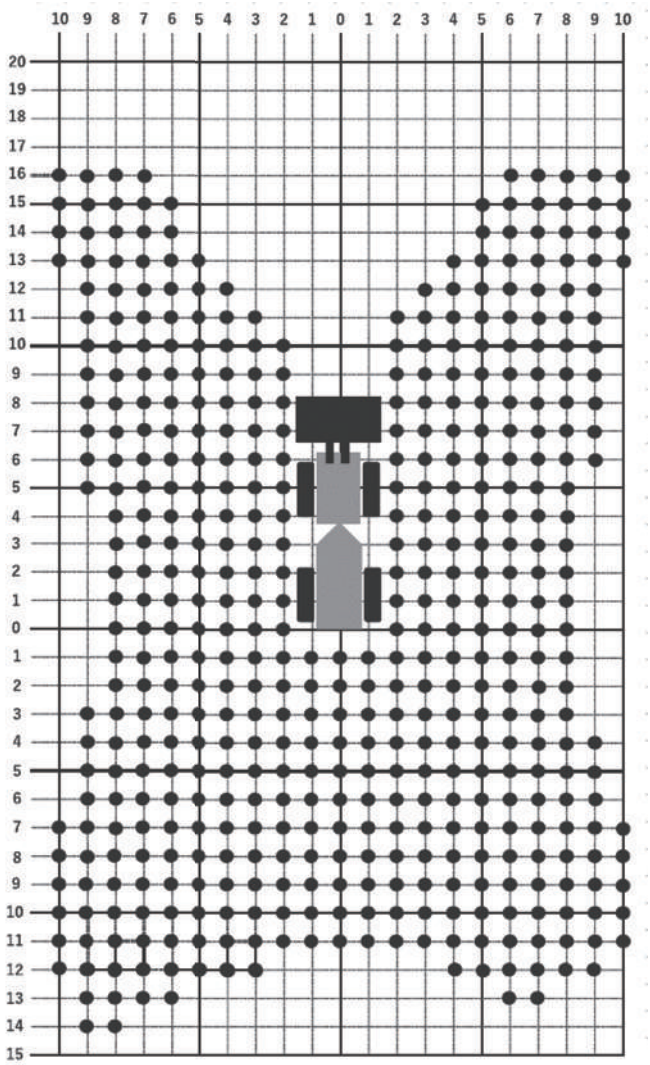

Aerial Angle Visibility Map
"Surrounding Image + Image to Rear"

MNTL-VM-006 en_GB

Visibility Map for Machine Model ZW140-7, 160-7, 160PL-7 Rear Obstacle Detection Sensor (Optional)

The rear obstacle detection (ROD) system can detect most objects within the detection zone.
However, there are factors such as object size, shape, relative location, and composition that could cause an object to go undetected by the system.

ROD Sensor Detection Zone

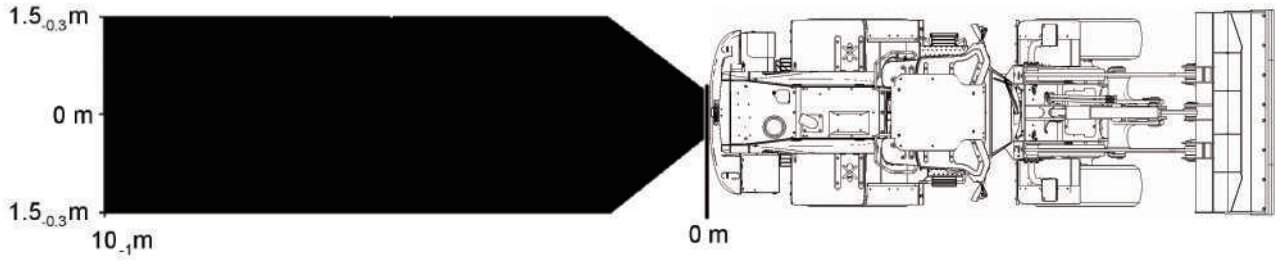

ROD Sensor Position

MNTL-VM-007 ja

*15dBSM Reflector is used for checking the detection zone

Safety Signs

All safety signs and their locations affixed on the machine are illustrated in this section. Make sure of the contents described in the safety signs by reading the actual signs affixed on the machine, to ensure safe machine operation.

Always keep the safety signs clean. If a safety sign is broken or lost, immediately, obtain a new replacement and affix it again in position on the machine. Use the part number indicated under the right corner of each safety sign illustration when placing an order of it to Authorized Dealer.

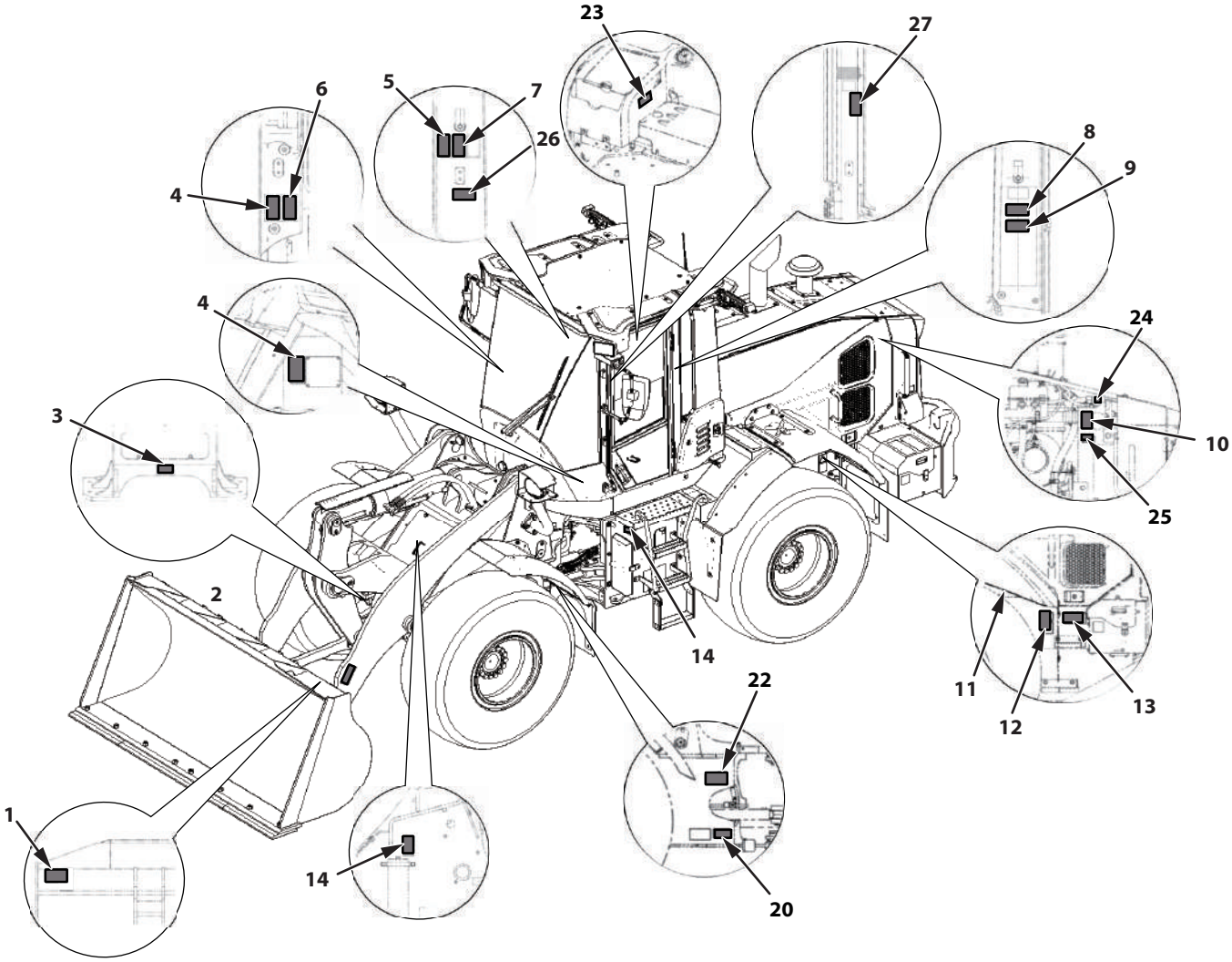

SS-4512-1 ja

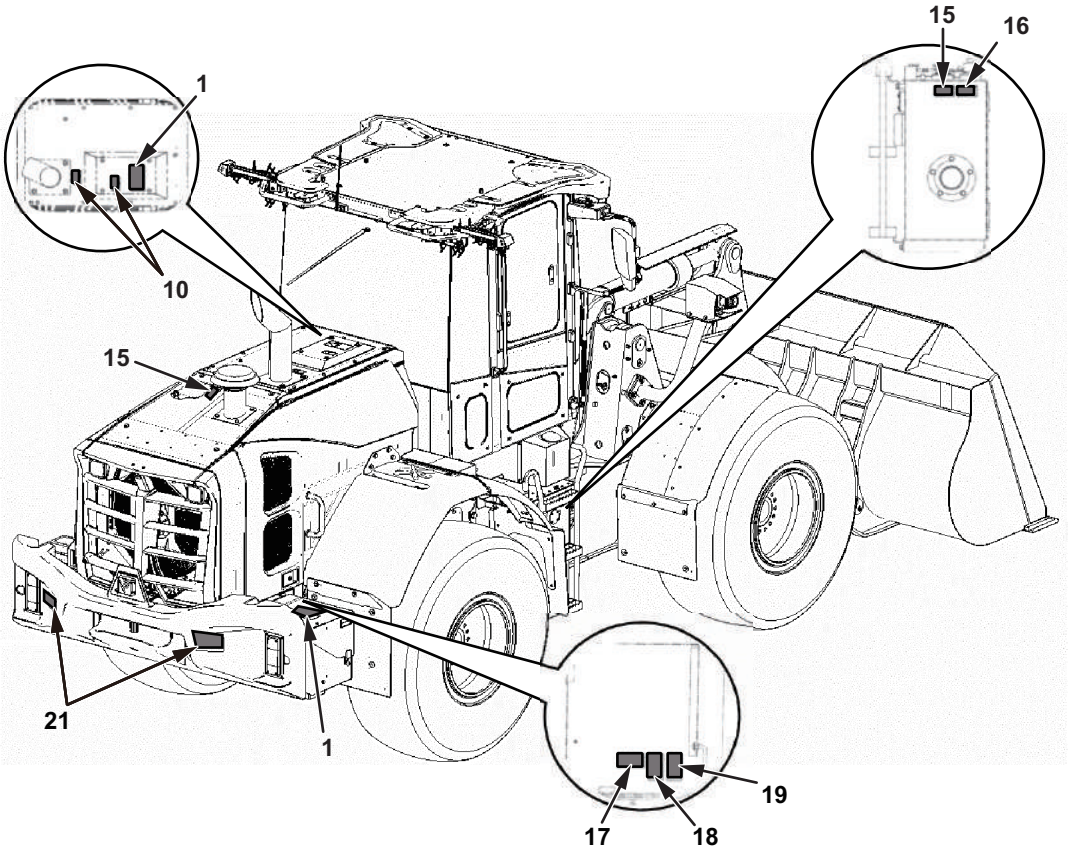

SS-4361-1 ja

1.

Bucket, Hood, Battery Box
Sign indicates a hazard of falling. Do not stand on this place.

SSYA00093795 ja

2.

Both Sides of Lift Arm
During operation, loads may spill from the bucket and/ or the bucket may suddenly fall.
Keep everyone far away from the machine during operation.

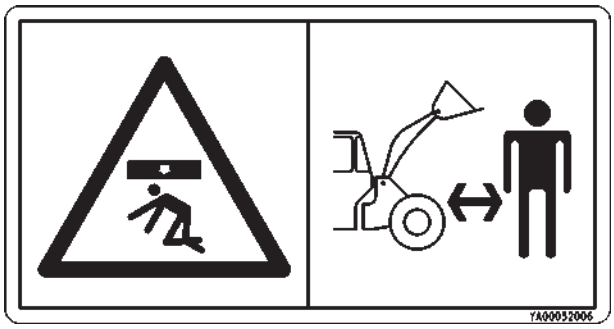

SSYA00052006 ja

3.

Front Maintenance Access Cover for Front Frame
The front attachment may automatically be lowered, possibly resulting in personal injury. Lower the front attachment to the ground before inspecting/maintaining the machine.
If inspection and/or maintenance work must unavoidably be performed with the front attachment raised, lock the front attachment control levers in position. Securely, support the front attachment with safety stays and/or blocks.

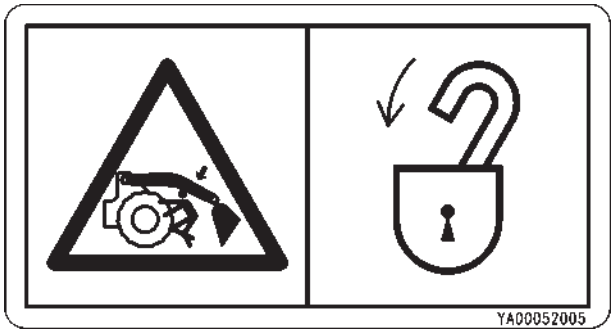

SSYA00052005 ja

4.

Cab Inside Right Front Column, Front Console Lower Left
Prior to operation, maintenance, disassembling, and transportation of the machine, be sure to read and understand the Operator's Manual.

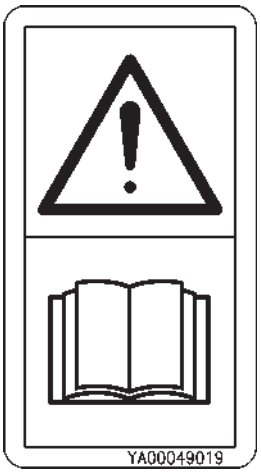

SSYA00049019 ja

5.

Cab Inside Right Rear Column
Sign indicates an electrocution hazard if machine is brought too near electric power lines. Keep a safe distance from electric power lines.

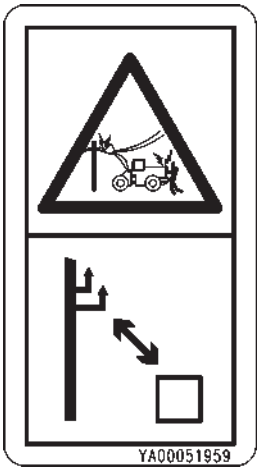

SSYA00051959 ja

6.

Cab Inside Right Front Column
If the parked machine starts moving unexpectedly, personal injury or death due to entanglement in moving parts or running over by the machine may result. Before leaving the machine, lower the front attachment to the ground, lock the control levers, and remove the key from the key switch.

SSYA00049020 ja

7.

Cab Inside Right Rear Column
To minimize the injury due to an overturning accident, be sure to fasten the seat belt prior to operating the machine.

SSYA00049023 ja

8.

Cab Inside Left Rear Column
If the steering system is abnormal, the emergency steering system is activated so that steering operation can be achieved on a temporary basis. The steering wheel will become hard to rotate but it is operable. Immediately park the machine in a safe location.
If the machine is operated with an abnormal steering system, a serious accident may result.

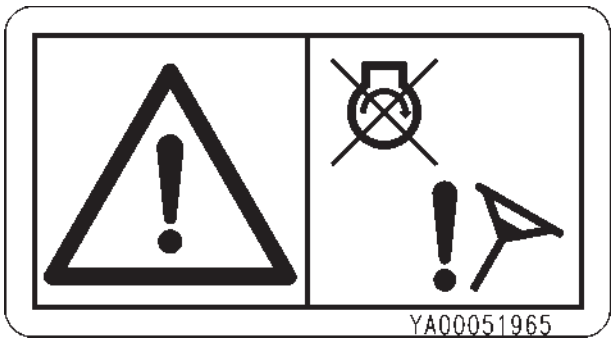

SSYA00051965 ja

9.

Cab Inside Left Rear Column
Communication terminal can cause accidental bombing at the blasting site. Keep the machine apart from the blasting site and an electric detonator to maintain a safe distance.

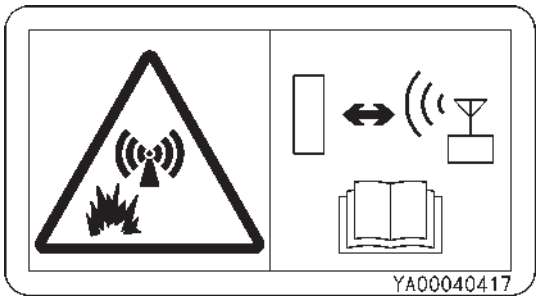

SSYA00040417 ja

10.

Hood, Both Sides of Oil Cooler
Avoid skin contact with highly heated parts such as the engine, muffler, etc. immediately after operation of the machine. Severe burns may result.
Do not touch until cool.

SSYA00051986-1 ja

11.

Side of Engine Starter
If the engine is started following an incorrect method, the machine suddenly may start to move.
Start the engine from the operator's seat only.

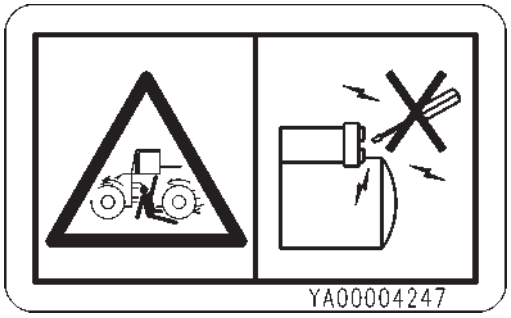

SSYA00004247-1 ja

12.

Both Sides of Rear Frame under Side Cover
If the engine is started following an incorrect method, the machine suddenly may start to move.
Start the engine from the operator's seat only.

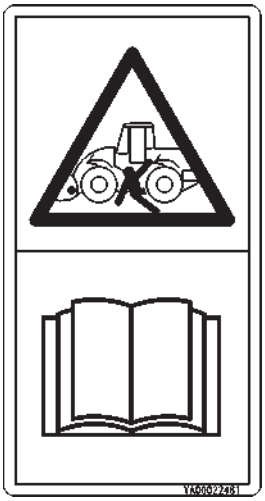

SSYA00022481-2 ja

13.

Both Sides of Rear Frame under Side Cover
Sign indicates a hazard of rotating parts, such as belt. Turn off before inspection and maintenance.

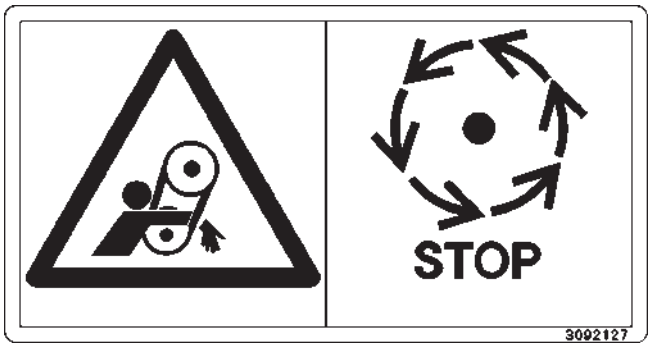

SS3092127-1 ja

14.

Transmission Maintenance Cover, Inside of Right Front Frame
The accumulator has been charged with high-pressure nitrogen gas. Inappropriate handling may cause explosion, possibly resulting in serious injury or death. Read operator's manual for safe and proper handing.

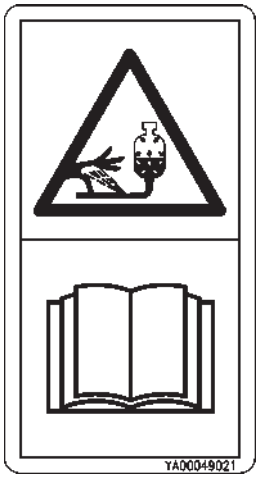

SSYA00049021 ja

15.

Hydraulic Oil Tank and Coolant Replenishment Port
Sign indicates a burn hazard from spurting hot water or oil if radiator or hydraulic tank is uncapped while hot. Allow radiator or hydraulic tank to cool before removing cap.

SS4420336-3 ja

16.

Hydraulic Oil Tank
Sign indicates a burn hazard from compressed air and spurting hot oil if the oil inlet is uncapped during or right after operation.
Read manual for safe and proper handling.

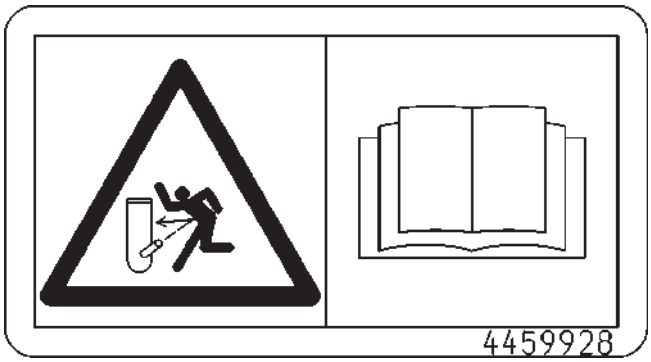

SS4459928-1 ja

17.

Inside Battery Box
Sign indicates an electrical hazard from handling the cable. Read manual for safe and proper handling.

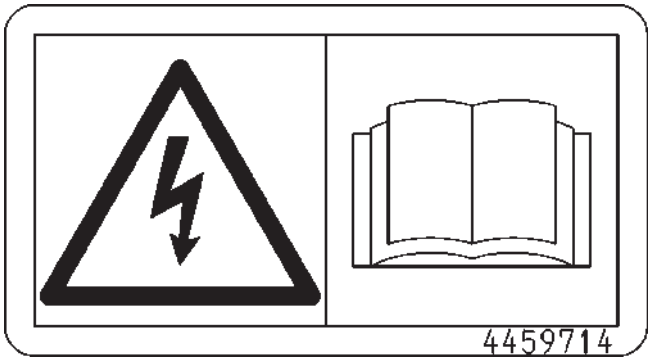

SS4459714-1 ja

18.

Inside Battery Box
Sign indicates an explosion hazard. Keep fire and open flames away from this area.

SS4460067-2 ja

19.

Inside Battery Box
Skin contact with electrolyte will cause burns. Splashed electrolyte into eyes will cause blindness. Take care not to touch electrolyte.

SS4460056-2 ja

20.

Articulate Lock Bar
The articulation area becomes a pinch point when steering the machine.
Keep all personnel away from the articulation area during operation of the machine.

SSYA00052007 ja

21.

Both Sides of Counterweight
Avoid injury from backing-over accident.
Keep everyone far away from the machine during operation.

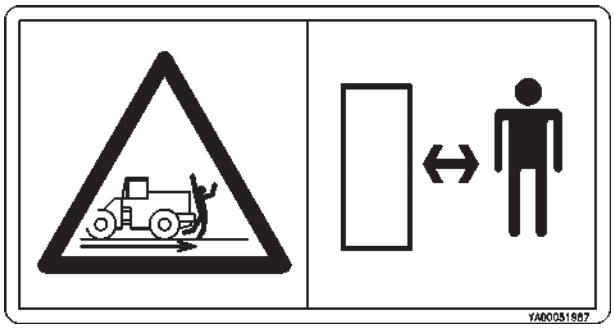

SSYA00051987 ja

22.

Both Sides of Articulation Area
The articulation area becomes a pinch point when steering the machine.
Keep all personnel away from the articulation area during operation of the machine.

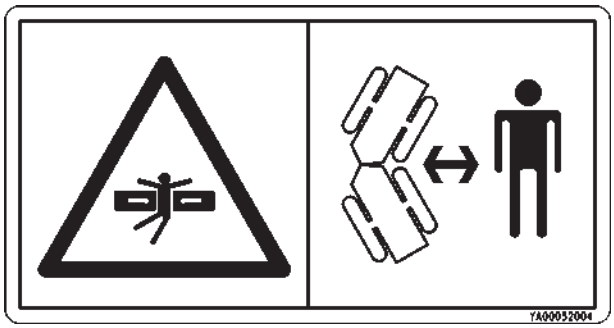

SSYA00052004 ja

23.

Cab Inside Rear Tray
To those persons fixed with any medical device. Including implantable device such as a cardiac pacemaker. Please read the instruction manual carefully and follow the instructions before using this machine.

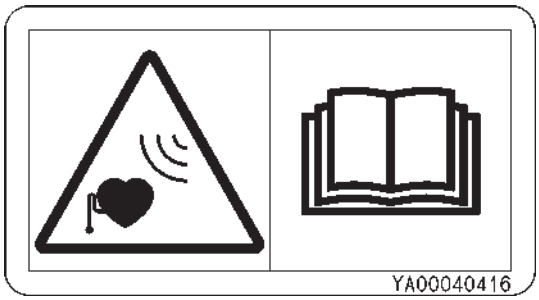

SSYA00040416 ja

24.

Inside the Oil Cooler Hose
Avoid skin contact with highly heated parts such as the hydraulic hose, etc, immediately after operation of the machine. Severe burns may result.

SS263G912601-1 ja

25.

Both Sides of Oil Cooler
Sign indicates a hazard of rotating parts, such as fan. Turn off before inspection and maintenance.

SS4672424-2 ja

26.

Cab Inside Right Front Column (ZW140-7, 160-7 Optional)
Be sure to fully engage the lock pin before moving the attachment. In case the lock pin is not fully engaged, the attachment may fall and result in death or serious injury.

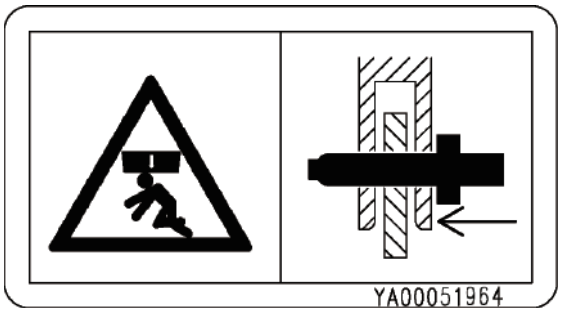

SSYA00051964 ja

27.

Cab Inside Left Front Column
Handling Precautions with ACCUMULATOR
This machine is equipped with an accumulator.
When you remove the parts and the accumulator on the hydraulic circuit, please read the instruction manual carefully and pay attention to handling.

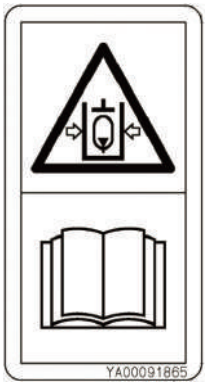

SSYA00091865 ja

Name of Components

1- Bolt on Cutting Edge (BOC)
2- Bucket
3- Bell Crank
4- Bucket Cylinder
5- Front Combination Lamp
(Headlight, Turn Signal, Clearance Light, Hazard Light)
6- Outside Rear View Mirror
7- Front Work Light
8- Side View Camera (Optional)
9- ROPS Cab
10- Exhaust Pipe
11- Rear Fender
12- DEF Tank
13- Front Fender
14- Lift Arm Cylinder
15- Lift Arm
16- Rear Work Light
17- Aftertreatment Device (Inside)
18- Hydraulic Oil Tank
19- Articulation Lock Bar
20- Battery Box
21- Rear Combination Lamp
(Turn Signal, Hazard Light, Tail Light, Brake Light)
22- Fan, Radiator, Oil Cooler
23- Towing Pin
24- Counterweight
25- Fuel Filler Port (Inside)
26- Rear View Camera
27- Rear Obstacle Detection Sensor (Optional)
28- Link
29- Guide
30- Bucket Link

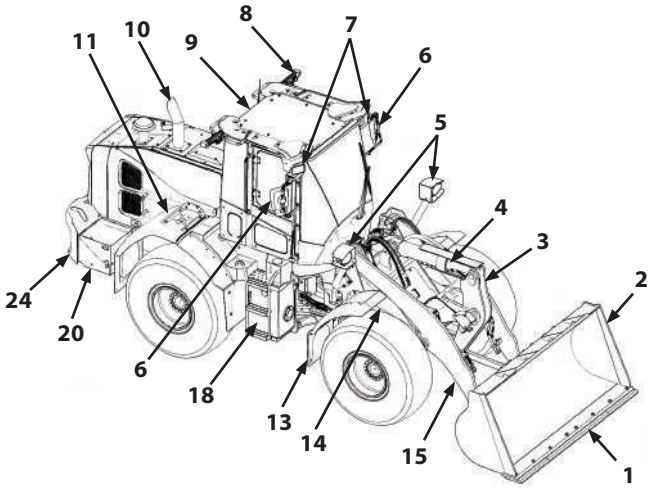

ZW140-7,160-7

MNTL-01-033-1 ja

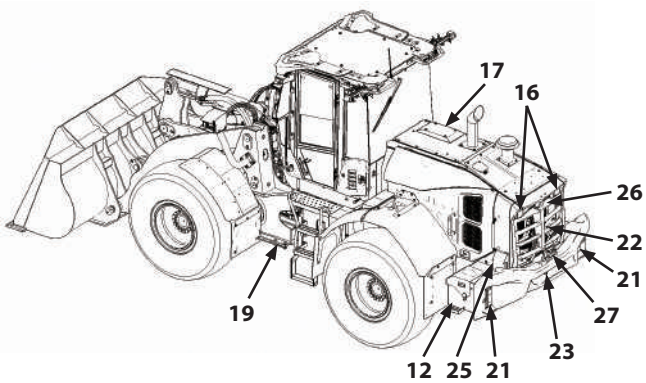

ZW140-7,160-7,160PL-7

MNTL-01-034-1 ja

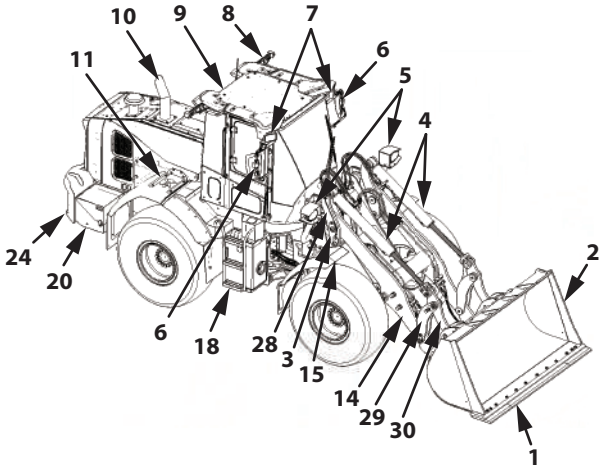

ZW160PL-7

MNTL-01-231-2 ja

Getting ON and OFF the Machine

Footholds (1) and handrails (2) are provided around the machine for safe entry and exit to the cab.
They also enable safe inspection and maintenance.
Never jump on or off the machine, as it is very dangerous.

WARNING

- **When lifting the cab/main body or transporting the machine, never attach wire to footholds (1) or handrails (2).**
- **Do not get ON/OFF by holding onto control levers, steering wheel or Forward/Reverse lever.**
- **Door handle (3) is not a handrail. Do not use as a handrail when getting on and off the machine.**

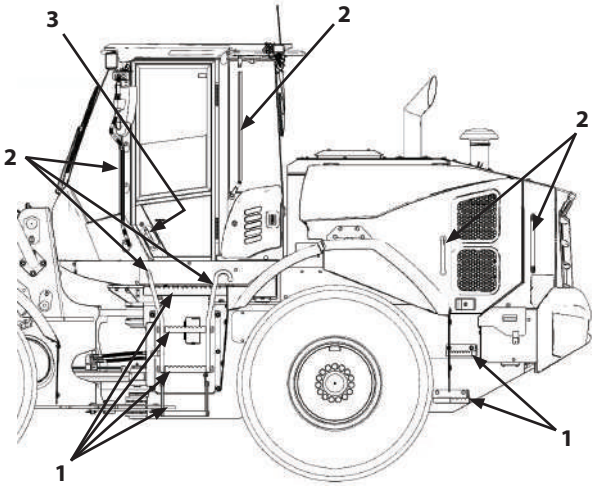

MNTL-01-035-1 ja

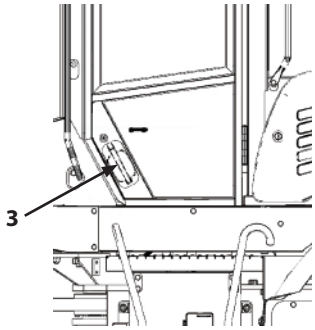

MNTL-01-036-1 ja

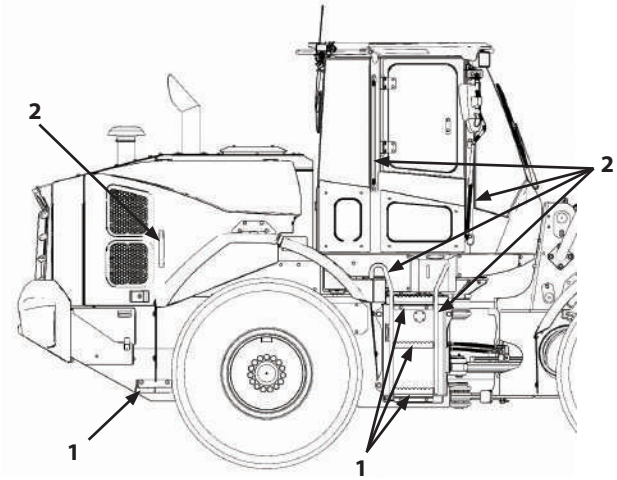

MNTL-01-037-1 ja

About Aftertreatment Device

The aftertreatment device is a single unit that combines a Diesel Oxidation Catalyst (DOC) block (1), Diesel Particulate Filter (DPF) block (2), and a SCR catalyst block (3). It collects particulate matter (PM) in the exhaust gas and purifies it via chemical reaction between nitrogen oxides (NOx) with DEF. Hazardous substances, such as carbon monoxide, in the exhaust gas are reduced via the chemical reaction in the DOC block and DEF is sprayed into dosing chamber (4). At that point the DEF is broken down into ammonia carbon dioxide (CO2). The SCR catalyst converts NOx into nitrogen and water via a chemical reaction between NOx in the exhaust gas and the ammonia. The ammonia is broken down in the SCR block into nitrogen and water.
Follow the instructions below to prevent the aftertreatment device from being damaged.

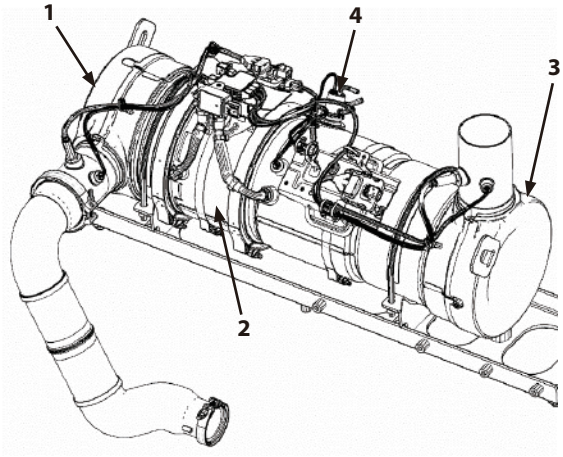

MNTL-01-038-1 ja

WARNING

- **Exhaust gas from the aftertreatment device, muffler, exhaust piping and tail piping becomes hot during and just after engine running and regeneration of the aftertreatment device. Be careful not to touch or get too close to any part of the exhaust system. Doing so may result in a burn.**
- **If flammable materials such as dead leaves or paper scraps are around the muffler, they may cause a fire.**
- **To avoid burns, stop the engine and make sure the engine has sufficiently cooled down before performing maintenance.**

IMPORTANT

- **Be sure to use fuel that complies with JIS K-2204, EN-590 or ASTM D-975 and contains 15 ppm or lower sulfur. If the fuel described above is not used, exhaust gas that exceeds regulation values may be discharged and serious engine problems may occur.**
- **Refill with DEF that meets Japanese Industrial Standards (JIS) or International Organization for Standardization (ISO). If improper liquid (diesel oil, kerosene or gasoline) is refilled in the DEF tank, fire or system failure may result.**
- **Use only genuine Hitachi Construction Machinery engine oil. Using engine oil other than genuine Hitachi Construction Machinery oil may result in malfunction of the aftertreatment device.**
- **Do not mix poor quality diesel fuel, drainage agents, fuel additives, gasoline, kerosene, alcohol, or any other type of lubricating oil with specified diesel fuel. Using the wrong fuel may cause fuel filters to perform poorly and can cause problems in the lubricated parts of the injector. It can also affect the engine parts and aftertreatment device, leading to malfunction.**
- **Do not modify the machine without authorization. In particular, never modify air inlet and exhaust parts (air duct, aftertreatment device, exhaust gas control system, including EGR equipment or the exhaust piping). Also never disassemble the aftertreatment device. Avoid shocking the aftertreatment device by striking parts of it with other objects or dropping the device. Failure to do so may affect the exhaust gas purifying equipment, possibly damaging it or lowering its performance.**
- **White smoke may be generated during aftertreatment device regeneration. Do not attempt to perform a manual regeneration in a poorly ventilated area.**
- **Consult Authorized Dealer for inspection, maintenance and repairs of the aftertreatment device.**

NOTE

- *White deposits may accumulate inside the aftertreatment device. Automatic regeneration of the aftertreatment device occurs to periodically eliminate the collected white deposits. This is called auto-regeneration. Auto-regeneration may start during operation of the machine; the machine can continue to be used as-is.*
- *Do not stop the engine during regeneration unless absolutely necessary.*
- *Auto-regeneration may be terminated, depending on vehicle operating conditions.*
- *Auto-regeneration normally starts at a set period since the end of the last regeneration, whether manual or automatic.*
- *If auto-regeneration fails to finish, a request for manual regeneration will start flashing. Perform manual regeneration as per the steps in "Aftertreatment Device Manual Regeneration" on page (1-7).*
- *When the vehicle is operated without performing manual regeneration, the aftertreatment device may be damaged. Immediately move the vehicle to a safe area and perform manual regeneration.*
- *Both auto and manual regeneration restore aftertreatment device function and this is not a malfunction.*
- *White smoke may come from the exhaust pipe for several minutes after the engine starts, this is not a malfunction.*

Aftertreatment Device Condition Indicator

Aftertreatment device indicator (1) displays the condition of the aftertreatment device.

It indicates the exhaust temperature is hot during aftertreatment device regeneration. It lights during auto or manual regeneration.

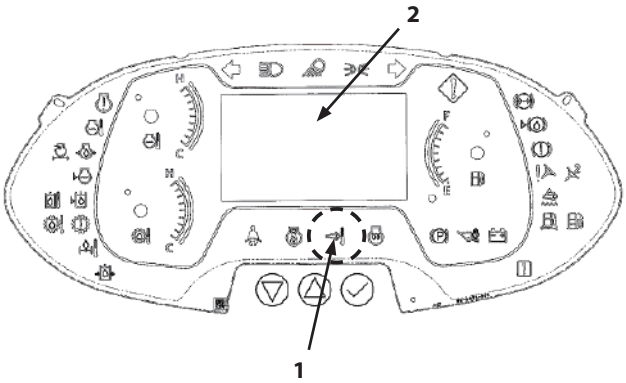

MNUD-01-030-1 ja

NOTE

- *Auto-regeneration is performed at random times. Auto-regeneration may start during operation of the machine; you can continue to operate the machine.*
- *Do not stop the engine during regeneration unless absolutely necessary.*
- *The manual regeneration switch is disabled during auto-regeneration.*

Depending on the operating conditions of the machine, the regeneration may fail to complete. In such case, an aftertreatment device regeneration request (3) is displayed on the monitor. Immediately perform manual regeneration according to the procedure.

The condition of the aftertreatment device is displayed at position (4) or (5) on the main monitor (see table below). For details on the display when manual regeneration is requested, refer to “Aftertreatment Device Manual Regeneration Request” on page (1-6).

(4) (Lit, Yellow) Indicates that the muffler filter (DPF) is excessively clogged. Perform manual regeneration according to the specified procedure.

(4) (Lit, Yellow) This symbol indicates that aftertreatment device regeneration is inhibited. Regeneration will not be performed when this is displayed.

(5) (Flashing, Red) Indicates regeneration not possible due to an error with the aftertreatment device. Contact Authorized Dealer.

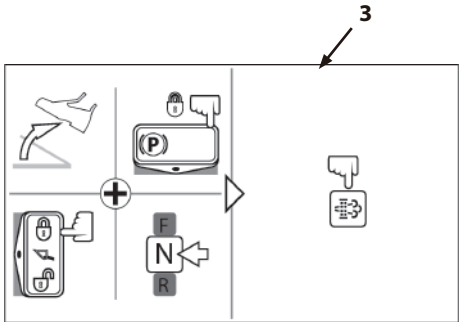

MNUD-01-033-1 ja

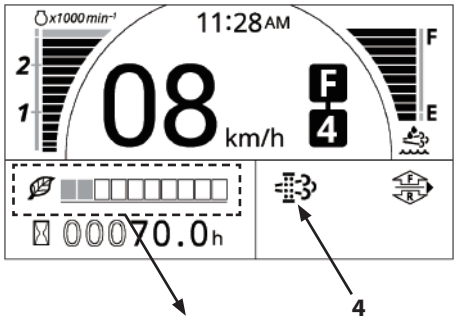

MNTL-MT-001-1 ja

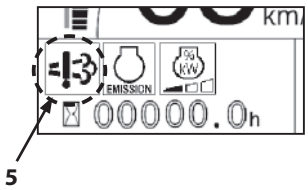

MNUD-01-088-1 ja

IMPORTANT

Set aftertreatment device regeneration to the inhibited position while operating the machine in an environment with materials that could be flammable. For details, refer to “Aftertreatment Device Regeneration Inhibition” on page (1-50).

Aftertreatment Device Manual Regeneration Request

The aftertreatment device needs regeneration.
Usually, regeneration is performed automatically.
However, manual regeneration is required under some conditions. The symbols below may be displayed on monitor (1). Service indicator (2) may also be displayed.

(Lit, Yellow)

Indicates that aftertreatment device manual regeneration is required. Perform manual regeneration according to the specified procedure.

(Blinking, Yellow)

Indicates that aftertreatment device manual regeneration is required immediately. Perform manual regeneration according to the specified procedure. If manual regeneration is not performed, it may become impossible to do so and Authorized Dealer will have to be contacted.

(Lit, Yellow)

This symbol indicates that aftertreatment device regeneration is inhibited.
It lights in yellow if a regeneration request occurs while aftertreatment device regeneration inhibit is ON. Move the machine to a safe location and perform manual regeneration according to the specified procedure.

NOTE

This symbol flashes if manual regeneration is required immediately.

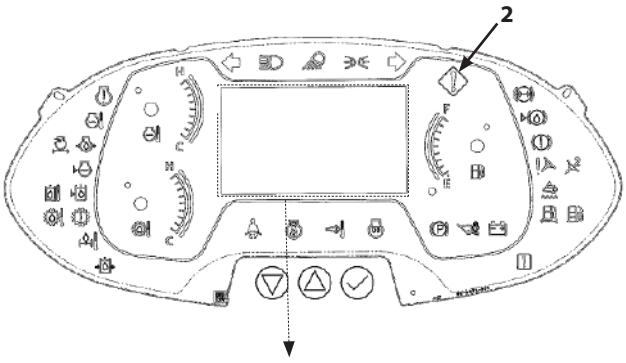

MNUD-01-030-2 ja

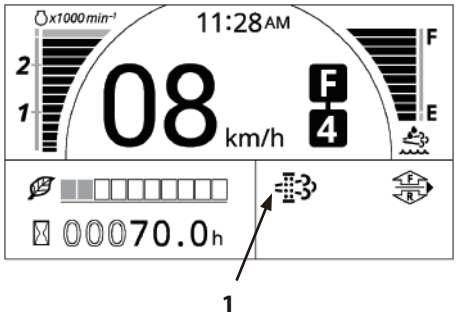

MNTL-MT-001-2 ja

IMPORTANT

- **Manual regeneration performed when the aftertreatment device regeneration request is displayed restores aftertreatment device function. This is not a malfunction.**
- **If the machine continues to be operated without performing manual regeneration, despite the aftertreatment device regeneration request being displayed, the aftertreatment device alarm is displayed and the alarm buzzer sounds. Contact Authorized Dealer.**

Aftertreatment Device Manual Regeneration Procedure

When manual regeneration is required, symbol (1) illustrated at right, appears on the screen in yellow and the service indicator lights.
If symbol (1) is displayed, manual regeneration needs to be performed.

Before starting manual regeneration, be sure to check the following.

- No one is around the machine
- No flammable materials near the aftertreatment device
- Remaining fuel alarm is not lit
- DEF level alarm is not lit

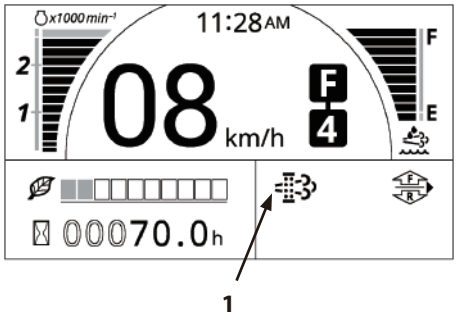

MNTL-MT-001-2 ja

1. Park the machine in a safe, well-ventilated location and lower the front attachment to the ground.
2. Manual regeneration request screen (2) is displayed on the main monitor. Position the accelerator pedal and various switches as follows.

Accelerator Pedal	: OFF
Forward/Reverse Lever	: N (Neutral)
Parking Brake Switch	: ON
Control Lever Lock Switch	: Locked (🔒)
Aftertreatment Device Regeneration Inhibit Setting	: OFF

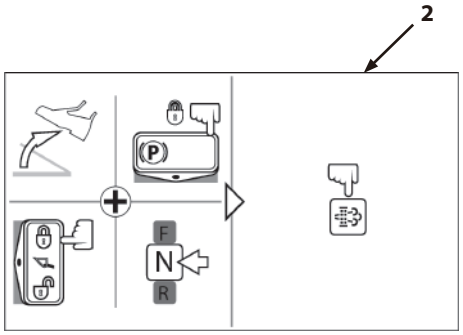

Manual Regeneration Request Screen

MNUD-01-033-2 ja

3. Press aftertreatment device regeneration switch (4) on switch panel (3).

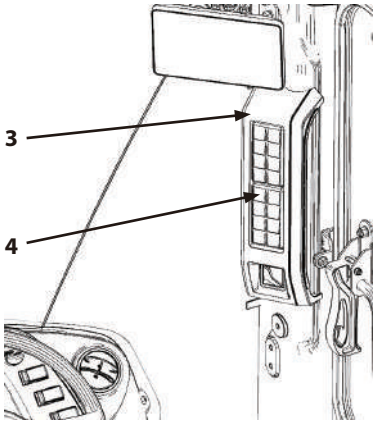

MNTL-01-039-1 ja

MNUD-01-202-1 ja

4. Press the aftertreatment device regeneration switch to open screen (5) illustrated at right. Press the aftertreatment device regeneration switch again to open screen (6) and start manual regeneration. Bar graph (7) at the top of the screen advances in line with the progress of regeneration.

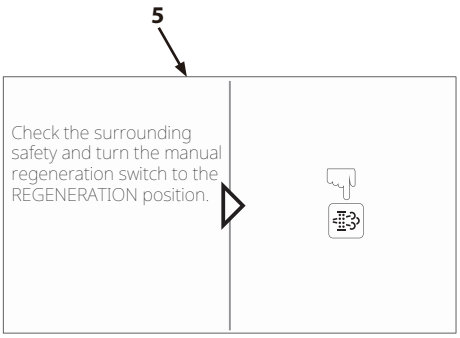

MNUD-01-034-1 en_GB

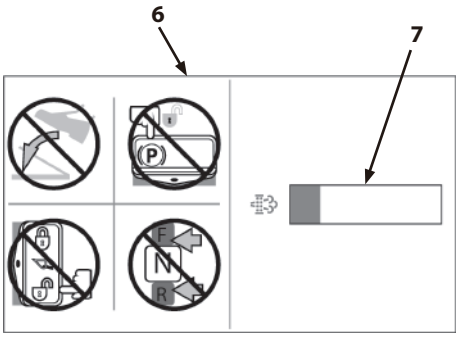

MNUD-01-032-1 ja

CAUTION

Manual regeneration will not start unless the accelerator pedal is OFF, Forward/Reverse lever is in neutral, parking switch is ON and control lever lock switch is ON. Regeneration is aborted during manual regeneration if the accelerator pedal, Forward/ Reverse lever, parking switch or control lever lock are touched. If the process is aborted, start over again.

5. When aftertreatment device regeneration finishes, “Regeneration Has Completed” is displayed. If “Regeneration Has Failed.” is displayed, perform aftertreatment device regeneration again. Failure of the regeneration process may happen in conditions other than those mentioned above (such as a malfunction of a sensor that affects regeneration, or at low ambient temperature).

NOTE

- *Regeneration may fail for reasons other than the conditions above (too cold outside, sensor error, etc.).*
- *The engine sound may change and the engine speed may increase when manual regeneration starts, this is not a malfunction.*
- *Regeneration time varies depending on the ambient temperature.*
- *White smoke may come from the tail pipe for a time during the regeneration process, this is not a malfunction.*
- *The time required for manual regeneration is shorter right after operating the machine, and longer when the engine is cold.*
- *Coolant temperature may increase during manual regeneration.*

Regeneration Has Completed.

MNUD-01-043 en_GB

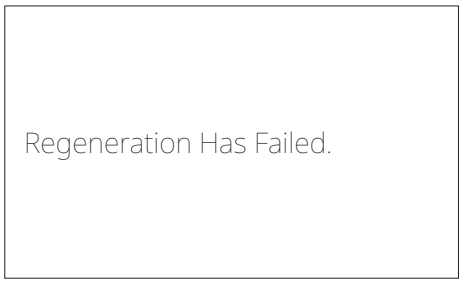

MNUD-01-044 en_GB

IMPORTANT

If absolutely necessary to interrupt regeneration and move the machine, press the manual regeneration switch again. "Regeneration has Failed" is displayed on the monitor, but the machine can be moved. In such case, manual regeneration should be performed again. Restart manual regeneration as soon as possible.

layout of equipment in operator’s station (illustration contents)

The names and layout of equipment in the operator's station are shown below. For detailed descriptions, refer to the page in the parentheses ( ).

1- Front Defroster
2- Front Console (1-140)
3- Right Console (1-152)
4- Document Holder
5- Glove Compartment (Air Conditioner Cooled/Heated Box)
6- Rear Defroster
7- Tray
8- Cup Holder
9- Floor Mat
10- Operator’s Seat (1-166)
11- Air Conditioner Vents
12- Air Conditioner Control Panel (1-172)
13- Steering Wheel (4-3)
14- Main Monitor (1-14)
15- Radio (1-180)
16- Sub Monitor (1-60)
17- Switch Panel (1-122)
18- Accelerator Pedal (4-8)
19- Brake Pedals (Left and Right Interlocked) (4-8)
20- Rear View Mirror Adjust Switch (Optional) (1-230)

NOTE

Refer to pages (1-140) “Front Console Switches” for information on the front console switches.

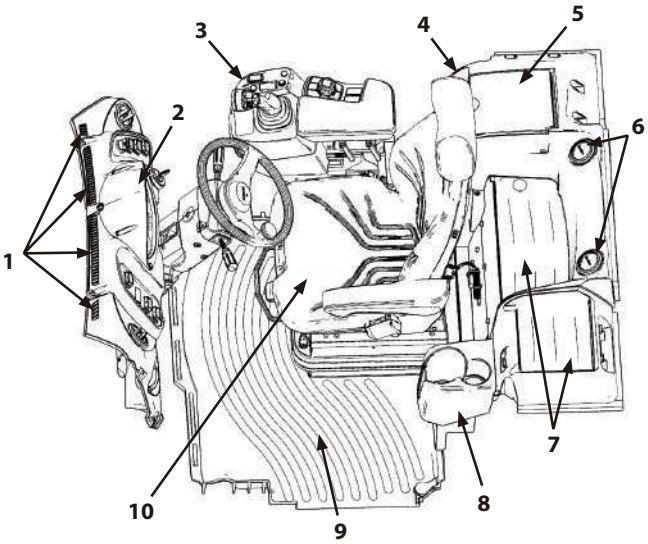

MNTL-01-040-1 ja

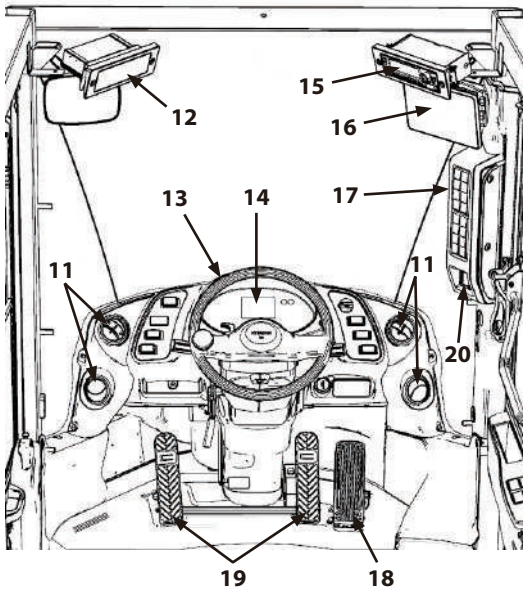

MNTL-01-041-1 ja

21- Forward/Reverse Lever
22- Smartphone Holder
23- USB Power Supply (1-165)
24- Tilt, Telescoping Lever (4-9)
25- Steering Column Pop-up Pedal (4-9)
26- 24 V Power Supply Socket (1-162)
27- Rear Obstacle Detection System (Automatic Speed Reduction) Assist System Activation / Deactivation Switch (Optional) (1-243)

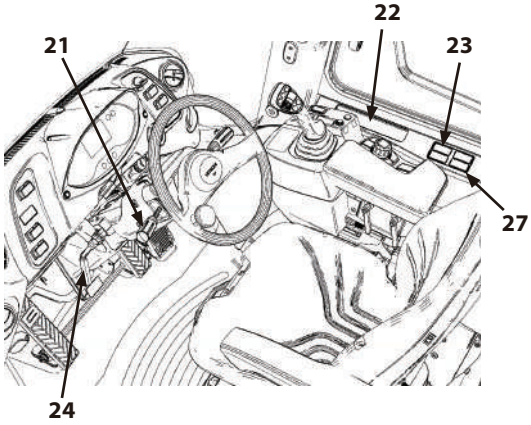

MNTL-01-042-2 ja

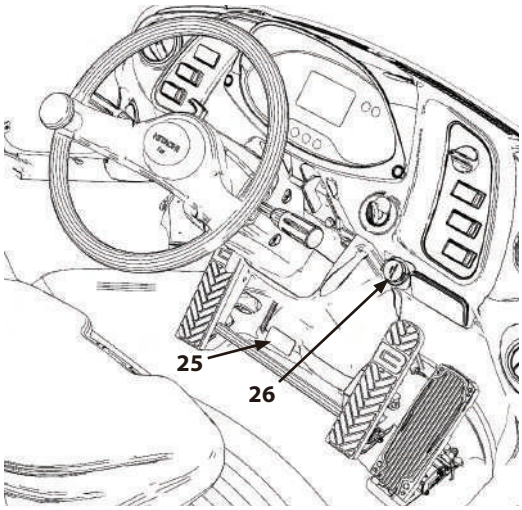

MNTL-01-043-1 ja

Layout (Right Console) (Illustration Contents)

1- Add Load Switch (for Payload Checker)
2- Truck Clear Switch (for Payload Checker)
3- Tip Off Switch (for Payload Checker)
4- Multi-Function Joystick Lever (1-160)
5- Sub Monitor Controller (1-60)
6- Armrest
7- Armrest Adjustment Levers (1-159)
8- Load Cancel Switch (for Payload Checker)

NOTE

- *Refer to pages (1-152) "Right Console, Control Lever Switches" for information on the right console switches.*
- *Refer to pages (5-21) "Payload Checker" in OPERATING THE MACHINE for information on the payload checker switches.*

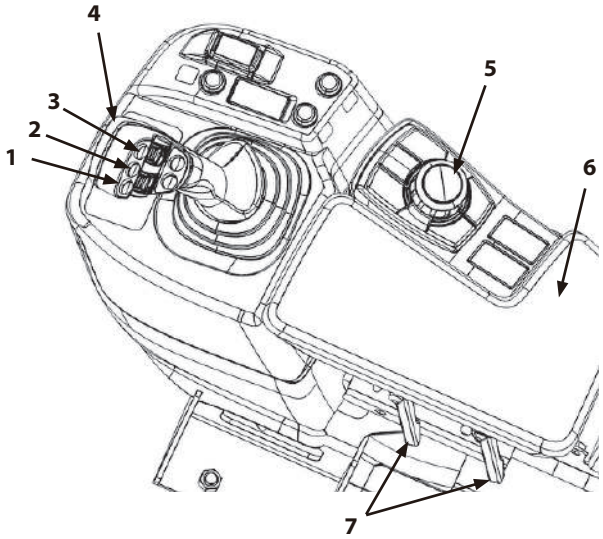

MNUD-01-028-9 ja

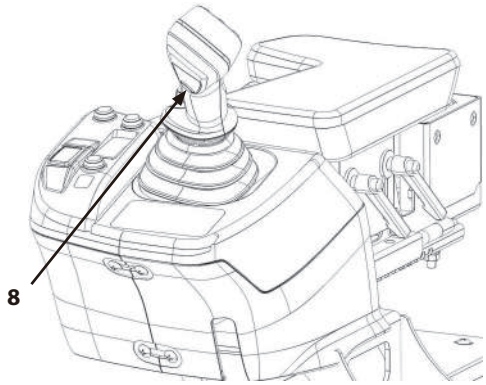

MNUD-01-029-2 ja

Multi-Function Monitors

Summary

This machine is equipped with 2 monitors, main monitor (1) on the front console and sub monitor (2) up high on the right.
The various meters, warning lights, camera images, advice messages, etc., are displayed on each.
Functions for operating, configuring, managing maintenance, etc., are available via the following menus.

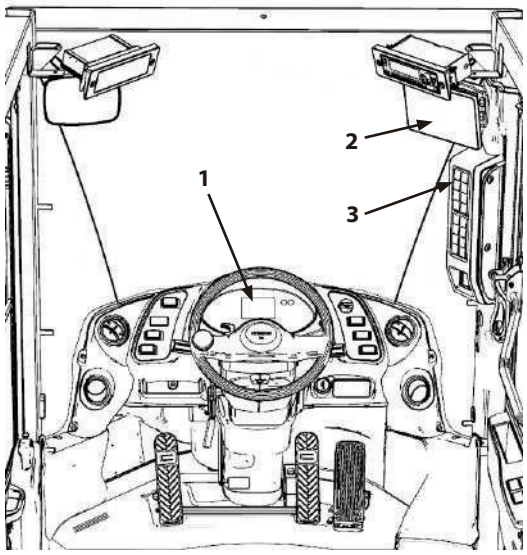

MNTL-01-041-2 ja

Main Menu of Main Monitor

- Sub Meters
- Display
- Aftertreatment Device Regeneration Inhibit Setting
- Troubleshooting
- Maintenance
- Monitoring

NOTE

For more details about the main menu of the main monitor, refer to page (1-36) of "Main Monitor Main Menu."

Main Menu of Sub Monitor

- Alarm List
- Operator Settings
- Material Select (ZW140-7, 160-7 only)
- Target Load Select (ZW140-7, 160-7 only)
- Payload Checker (ZW140-7, 160-7 only)
- Ride Control
- Auto Leveler
- Settings
- Display
- Information

NOTE

- *For more details about the main menu of the sub monitor, refer to page (1-75) of "Sub Monitor Main Menu."*
- *Each of the switches on switch panel (3) also has a setting function. The LED indicator on the switch indicates the current setting. Refer to pages (1-122) "Switch Panel (Illustration Contents)" for information on the switch panel.*

Monitor Panel (Main Monitor)

Main Monitor Indicator Lights (Illustration Contents)

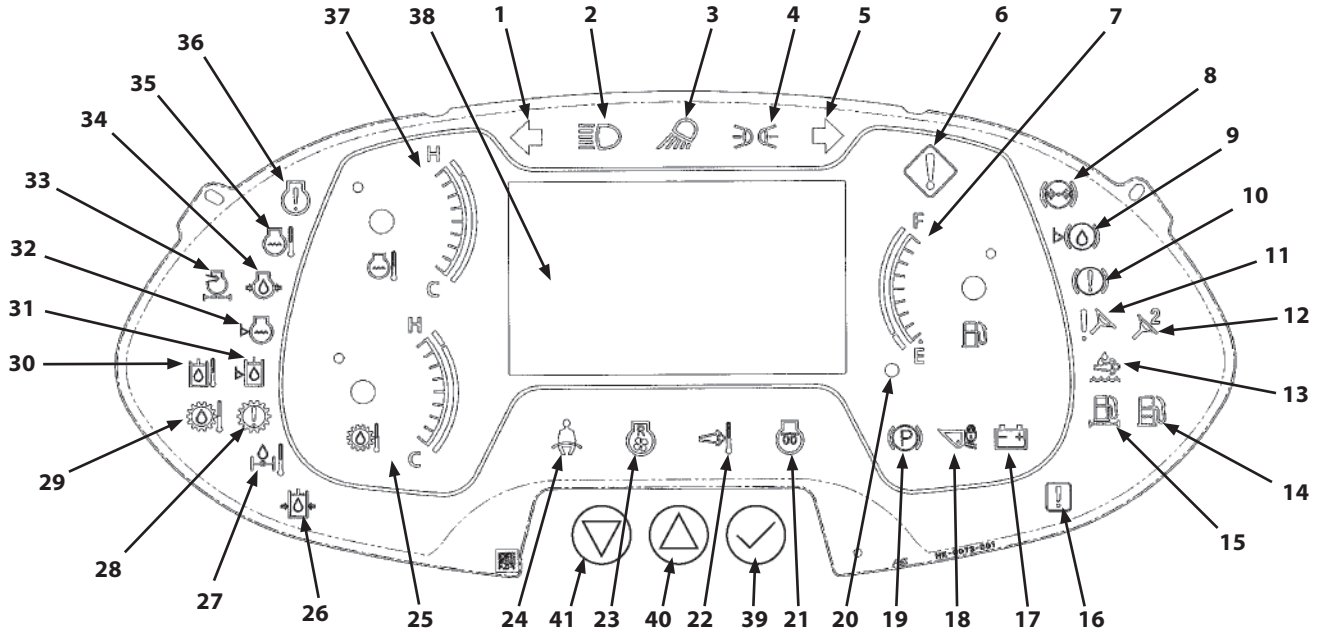

MNUD-01-011-2 ja

1- Left Turn Signal Indicator (1-16)
2- High Beam Indicator (1-16)
3- Work Light Indicator (1-16)
4- Clearance Light Indicator (1-16)
5- Right Turn Signal Indicator (1-16)
6- Service Indicator (1-16)
7- Fuel Gauge (1-17)
8- Brake Oil Low Pressure Indicator (1-18)
9- Brake Oil Level Indicator (Not Used)
10- Service Brake Warning Indicator (Not Used)
11- Low Steering Oil Pressure Indicator(1-18)
12- Secondary Steering Indicator
(Machine Equipped with Emergency Steering System)
(1-22)
13- Urea Alarm (Not Used)
14- Water Separator Indicator (Not Used)
15- Fuel Filter Restricted Indicator (Not Used)
16- Communication Error Indicator (1-18)
17- Discharge Warning Indicator (1-19)
18- Control Lever Lock Indicator (1-19)
19- Parking Brake Indicator (1-18)
20- Fuel Level Indicator (1-17)

NOTE

For details, refer to the page in the parentheses ( ).

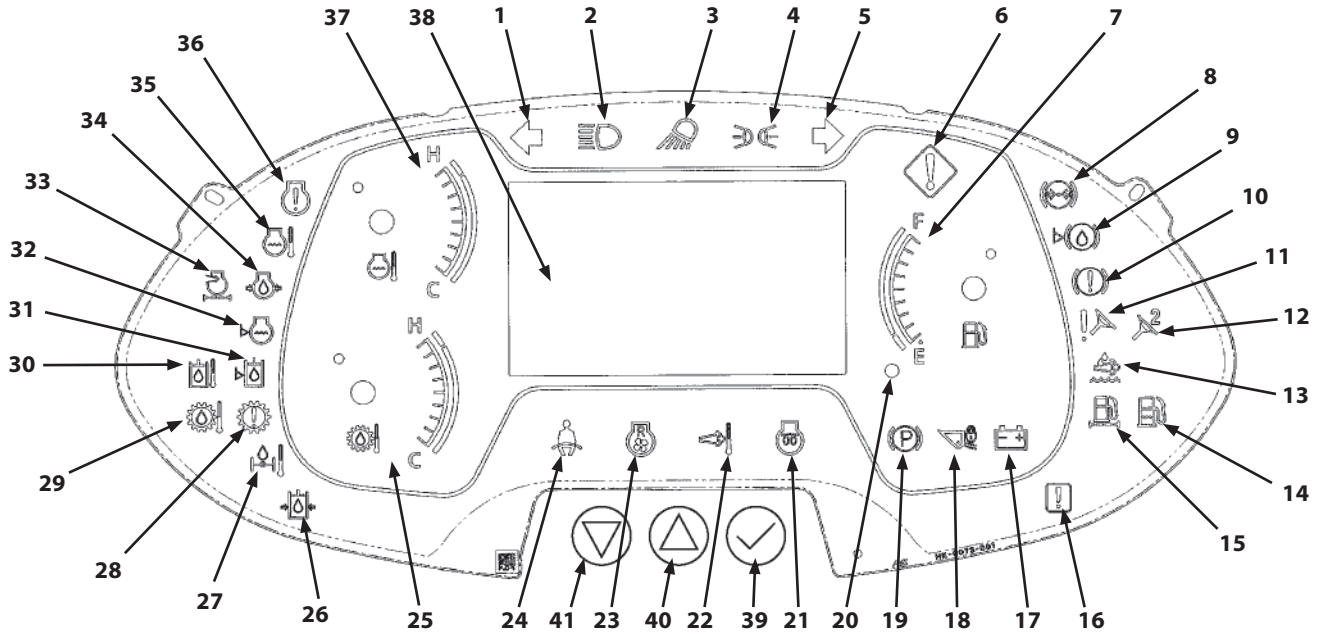

MNUD-01-011-2 ja

21- Preheating Indicator (1-23)
22- Aftertreatment Device Indicator (1-23)
23- Fan Reverse Rotation Indicator (1-23)
24- Seat Belt Indicator (1-23)
25- HST Temperature Gauge (1-19)
26- Main Pump Oil Pressure Indicator (Not Used)
27- Axle Oil Temperature Indicator (Not Used)
28- HST Warning Indicator (1-19)
29- HST Oil Temperature Indicator (1-17)
30- Hydraulic Oil Temperature Indicator (1-20)
31- Hydraulic Oil Level Indicator (1-20)
32- Coolant Level Indicator (Not Used)
33- Air Filter Restricted Indicator (1-20)
34- Engine Oil Low Pressure Indicator (1-21)
35- Overheat Indicator (1-21)
36- Engine Trouble Indicator (1-21)
37- Coolant Temperature Gauge (1-17)
38- Multi-Function Monitor (1-24)
39- Set Button
40- Monitor Display Selector Switch (Up)
41- Monitor Display Selector Switch (Down)

NOTE

For details, refer to the page in the parentheses ( ).

Turn Signal Indicator (Green)

When the turn signal lever is operated, the turn signal and the indicator start flashing.

M4GB-01-032 ja

High Beam Indicator (Blue)

This indicator lights when the headlights are on high beam.

M4GB-01-033 ja

Work Light Indicator (Yellow)

When the work lights are turned ON, this indicator comes ON.

M4GB-01-034 ja

Clearance Light Indicator (Green)

When the clearance lights are turned on, this indicator lights.

M4GB-01-035 ja

Service Indicator (Yellow)

WARNING

To avoid injury and/or damage to equipment, whenever a service indicator lights or a warning buzzers sounds, stop working immediately and inspect and/or service the relevant part.

MNUD-01-013 ja

When a service indicator lights, the warning buzzer sounds. Stop working immediately and move to a safe location. Stop the machine and the engine. Consult Authorized Dealer.

Coolant Temperature Gauge

The temperature of the engine coolant is indicated with a needle.

It is normal if the needle is inside range (1) during operation.

If the engine coolant becomes excessively hot, the service indicator lights and the warning buzzer sounds. If this happens, stop working, set the engine speed to slow idle to cool the coolant. Then stop and inspect the engine.

If the needle fails to move at all, a fault in the electrical system is likely. Consult Authorized Dealer.

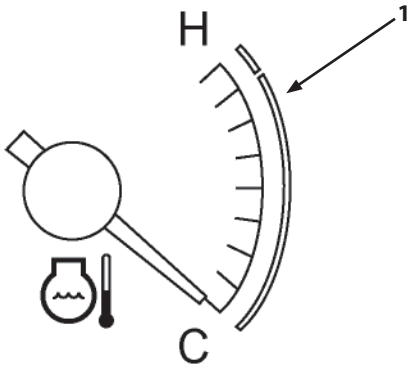

MNUD-01-014-1 ja

Fuel Gauge

The amount of fuel remaining is indicated by the needle.

Refill the tank before the needle reaches the red range (E).

Once the needle enters the red range (E), fuel level indicator (4) lights.

NOTE

When the vehicle is on a slope, fuel level indicator (4) may light before the needle enters the red range (E).

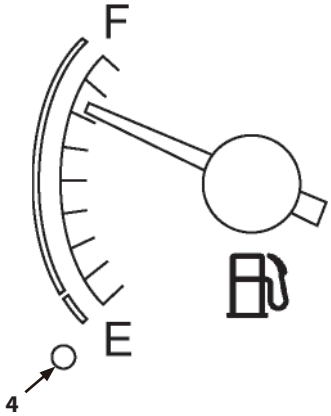

MNUD-01-016-2 ja

HST Temperature Gauge

The temperature of HST oil is indicated with a needle.

It is normal if the needle is inside range (3) during operation.

If the needle is in range (2), the HST oil is abnormally hot. If this condition continues for a short time, the service indicator lights. Stop working, set the engine speed to slow idle to cool the HST oil. Then stop and inspect the machine.

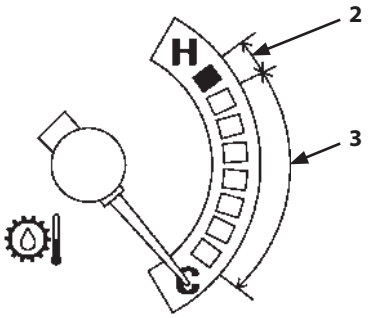

M4GB-01-029-1 ja

Parking Brake Indicator (Red)

The parking brake indicator lights when the parking brake is ON.
When the parking brake is ON, putting the Forward/Reverse lever in forward (F) or reverse (R) causes the warning buzzer to sound. Return the Forward/Reverse lever to neutral (N) and turn the parking brake OFF.

M4GB-01-012 ja

Brake Oil Low Pressure Indicator (Red)

WARNING

Continuing to operate the machine when its brake pressure is low may result in an accident and/or injury. If the warning lamp lights, stop the machine immediately.

M4GB-01-013 ja

If brake oil pressure drops too low, the brake oil low pressure Indicator comes ON and the warning buzzer sounds.
Move immediately to a safe location, put the machine in a safe attitude and stop the engine. Then inspect the brake system.
Once the brake pressure returns to normal, the buzzer stops and the warning lamp goes out.

Low Steering Oil Pressure Indicator (Red) (Only Machine Equipped with Emergency Steering System)

IMPORTANT

The emergency steering system should only be used temporarily for steering if the steering oil pressure drops. Continuing to use it will damage the system.

MNUD-01-012 ja

If steering oil pressure drops too low, the low steering oil pressure indicator and the service indicator come ON and the warning buzzer sounds. Move immediately to a safe location, put the machine in a safe attitude and stop the machine.

Communication Error Indicator (Red)

The communication error indicator comes ON if an error in the communication system occurs. Consult Authorized Dealer.

MNUD-01-022 ja

Discharge Warning Indicator (Red)

If the voltage from the alternator is low or is abnormally high, the discharge warning indicator and the service indicator come ON. Inspect the alternator and battery circuitry.

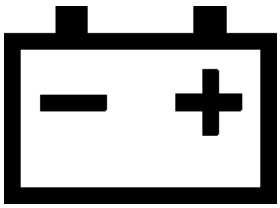

M4GB-01-018 ja

Control Lever Lock Indicator (Red)

When the control lever lock switch is ON, the control lever lock indicator lights.

MNEC-01-004 ja

HST Warning Indicator (Red)

This indicates a major problem with the HST or HST-related parts. If the HST warning indicator comes ON and the service indicator lights, move immediately to a safe location, put the machine in a safe attitude and stop the engine. Then, contact Authorized Dealer.

M4GB-01-024 ja

HST Oil Temperature Indicator (Red)

If HST oil continues to be above its specified temperature for a short time, the HST oil temperature indicator comes ON. If this condition continues for a long time, the service indicator lights and the warning buzzer sounds. Stop working immediately, set the engine speed to slow idle to cool the HST oil.

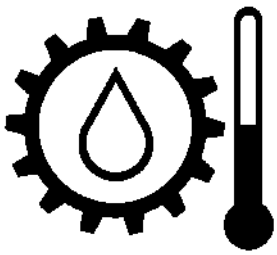

M4GB-01-027 ja

Hydraulic Oil Temperature Indicator (Yellow) (Red)

If hydraulic oil temperature drops too low, the hydraulic oil temperature indicator and the service light come ON and the warning buzzer sounds.

NOTE

If the hydraulic oil reaches an abnormally hot level, the hydraulic oil temperature indicator comes ON in yellow (pre-alert). Stop operating the machine and wait for the hydraulic oil temperature to drop to a normal level.

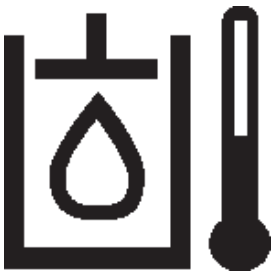

MNTL-01-223 ja

Hydraulic Oil Level Indicator (Red)

WARNING

Continuing to operate the machine when its hydraulic oil pressure is low may result in an accident and/or injury. If the red light comes ON, immediately stop the machine.

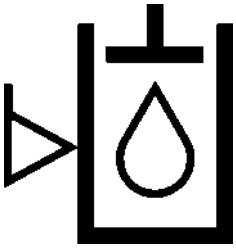

MNEC-01-057 ja

If the hydraulic oil level drops too low, the hydraulic oil level indicator and the service light come ON and the warning buzzer sounds. Move immediately to a safe location, put the machine in a safe attitude and stop the engine. Then check the hydraulic oil level and inspect lines for leaks.

Air Filter Restricted Indicator (Red)

When the air cleaner element becomes clogged, the air filter restricted indicator and the service indicator light. Stop the machine and the engine right away; then check the air cleaner element. Replace it if needed.

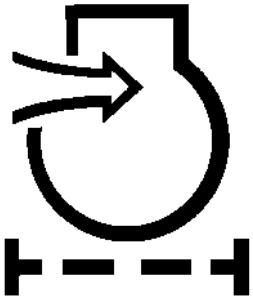

M4GB-01-023 ja

Engine Oil Low Pressure Indicator (Red)

WARNING

If the engine is operated when the pressure of its lubricating oil is too low, it will damage the engine. If the warning lamp comes ON, stop the machine immediately and stop the engine.

M4GB-01-021 ja

If engine lubricating oil pressure drops too low, the engine oil low pressure indicator and the service indicator light and the warning buzzer sounds. Move immediately to a safe location, put the machine in a safe attitude and stop the engine. Then check the engine oil system and oil level.

NOTE

The indicator may also light if the oil is cold and/or when operating on an extreme incline.

Overheat Indicator (Red)

This lamp warns of abnormally high coolant temperature. The overheat indicator and the service indicator come ON and the warning buzzer sounds. Stop operations and run the engine at slow idle speed to lower the coolant temperature.

M4GB-01-020 ja

Engine Trouble Indicator (Red)

This indicates a major problem with the engine and/or engine-related parts. If the engine trouble indicator comes ON and the service indicator lights, move immediately to a safe location, put the machine in a safe attitude and stop the engine. Then, consult Authorized Dealer.

M4GB-01-019 ja

Secondary Steering Indicator (Red)(Machine Equipped with Emergency Steering System)

IMPORTANT

The emergency steering system should only be used temporarily and continuing to use it will damage the system.

MNUD-01-025 ja

When the emergency steering system is operated, the secondary steering indicator comes ON and the warning alarm sounds. Move immediately to a safe location, put the machine in a safe attitude and stop the machine.

NOTE

When the emergency steering system switch is pressed, the secondary steering indicator comes ON but the warning alarm does not sound.

IMPORTANT

After starting the engine, if there is no operating noise, or if the indicator lights, immediately stop the engine and stop using the machine. Contact Authorized Dealer.

NOTE

The emergency steering system is checked automatically for about 2 seconds when the engine is started. The pump may make noise and the secondary steering indicator may light briefly, but this is normal.
If the results of the check are abnormal, the secondary steering indicator will stay on and the transmission will be locked in neutral.

Preheating Indicator (Yellow)

When lit, it indicates that the engine is preheating; once it goes out, preheating is complete.

M4GB-01-031 ja

Aftertreatment Device Indicator (Yellow)

This indicator indicates the exhaust temperature is hot during aftertreatment device regeneration. It lights during auto or manual regeneration.

MNUD-01-017 ja

Fan Reverse Rotation Indicator (Green)

This lights when the fan is operating in reverse.

MNUD-01-026 ja

Seat Belt Indicator (Red)

If the seat belt is not fastened after turning the starter key ON, the seat belt indicator comes ON. The warning buzzer does not sound.

The seat belt indicator lights after the engine is started. Once the parking brake is released, the buzzer sounds and a guidance message is displayed on the sub monitor to fasten the seat belt.

MNUD-01-036 ja

NOTE

As long as the parking brake is engaged, the seat belt indicator lights, but the buzzer does not sound.

Switches for Multi-Function Monitor Operation

Use the switches on the switches panel to operate the main monitor and make the various settings.

Press monitor display selector (down) (2) to select the next item down or selector (up) (3) to select the next item up. Press Monitor Display Mode Selector (4) to set the selection.

1- Monitor Display
2- Monitor Display Selector Switch (Down)
3- Monitor Display Selector Switch (Up)
4- Monitor Display Mode Selector

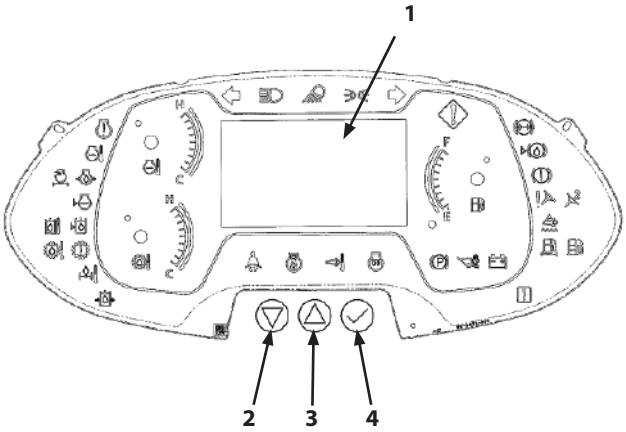

MNUD-01-030-3 ja

Displaying Main Monitor Basic Screen

IMPORTANT

Start the engine after the basic screen is displayed.

Once the key switch is put in the ON position, the starting screen is displayed for 2 seconds and then the basic screen is displayed.

The basic screen displays the various meters, gauges and the state of the machine. Screens like the aftertreatment device regeneration screen and the maintenance screen may also be displayed.

The multi-function monitor has 6 main menus with 9 sub menus. For more details on menu layout, refer to page (1-37) of "Layout of Main Monitor Main Menu."

NOTE

A maintenance notice screen or aftertreatment device notice screen may be displayed prior to the basic screen. Refer to the following pages for more information about them.

Starting Screen

MNTL-MT-014 ja

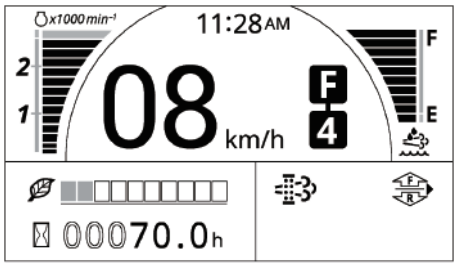

MNTL-MT-001 ja

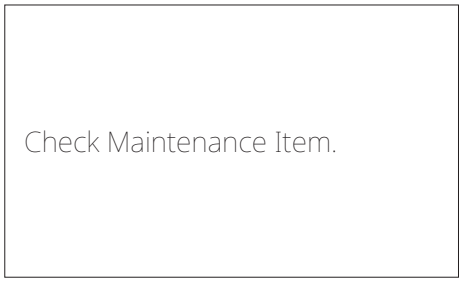

Maintenance Notice Screen

MNUD-01-035 en_GB

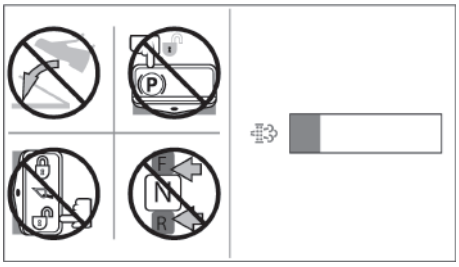

Aftertreatment Device Notice Screen

MNUD-01-032 ja

Maintenance Notice Screen

If any regular maintenance is scheduled within 20 hours, the maintenance notice screen is displayed for about 5 seconds prior to the basic screen.
Check the maintenance items that need to be performed and refer to the MAINTENANCE chapter to perform them.

NOTE

This screen is not displayed if the maintenance notice function is OFF. To make settings for maintenance notices, refer to "Maintenance Notices" on page (1-56).

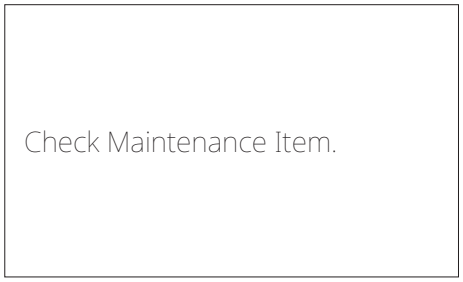

MNUD-01-035 en_GB

Aftertreatment Device Notice Screen

If manual aftertreatment device regeneration is required after the starting screen is displayed, the aftertreatment device manual regeneration request screen is displayed instead of the basic screen.
Move to a safe location and start aftertreatment device manual regeneration. For details on the manual regeneration process and necessary conditions, refer to "Manual Regeneration" on page (5-7).

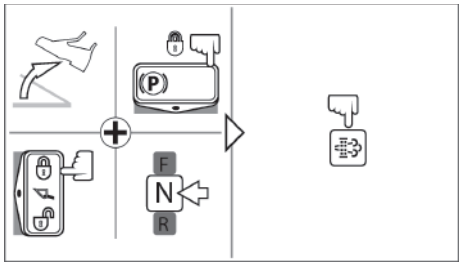

MNUD-01-033 ja

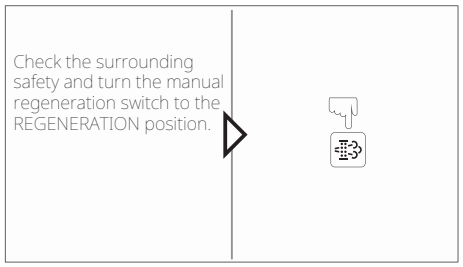

MNUD-01-034 en_GB

Main Monitor Basic Screen

1- Engine Tachometer
2- DEF Level Gauge
3- ECO Indicator
4- Speedometer
5- Clock
6- Sub Meters
7- F-N-R Position Indicator
8- Shift Position Indicator
9- Aftertreatment Device Indicator
10- Forward/Reverse Selector Switch Indicator

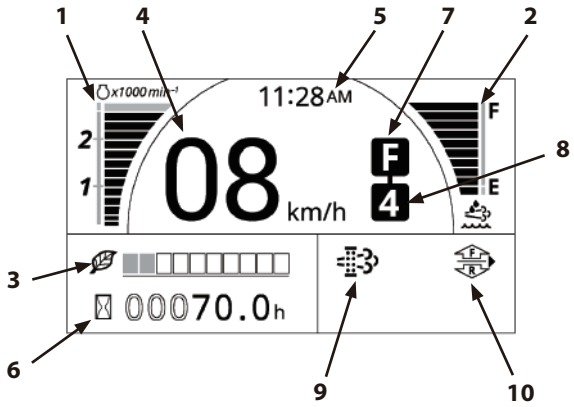

MNTL-MT-001-3 ja

Main Monitor Basic Screen Displayed Items

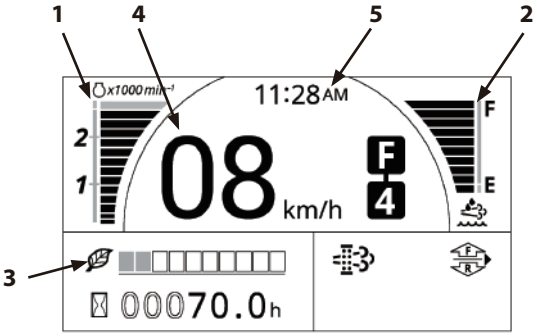

MNTL-MT-001-4 ja

- Engine Tachometer (1)
  Displays the current engine speed as a gauge. (200 min^{-1} step)
  The gauge changes color if the engine is overspeeding.
- DEF Level Gauge (2)
  DEF level gauge (2) displays the amount of DEF remaining.
  When the DEF level gets low, the last segment and the bar on the right turn yellow. As the amount of DEF gets even lower, the last segment turns red and engine output is restricted. For details on low DEF warnings, refer to “Low DEF” on page (1-34).
- ECO Indicator (3)
  Lights when the operator is driving fuel efficiently. The green bars get longer the more efficiently it is driven.

  NOTE

  ECO indicator (3) is not displayed if any of the following alarms are displayed.

  - DEF-related Alarms:
    For details on the following alarms, refer to “DEF/DEF SCR System Warnings” on page (1-32).

MNTL-01-024 ja

  - System Restart Request:
    When the machine is operated continuously in excess of 23 hours, it must be restarted. Stop the engine for a moment, make sure the monitor has gone off, and then restart the engine. For information on starting the engine, refer to Section 3.

MDFY-00-026 ja

- Speedometer (4)
  The speedometer indicates the current travel speed.
- Clock (5)
  Indicates the current time. 24-h/12-h display can be selected. For details, refer to “Date and Time” on page (1-41).

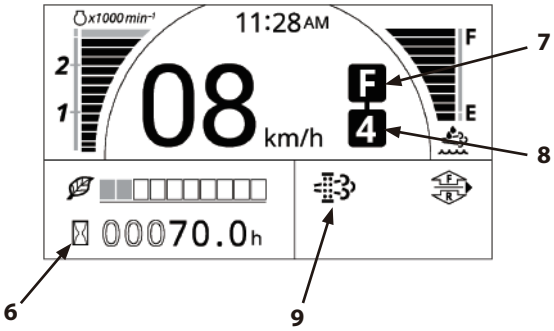

MNTL-MT-001-5 ja

- Sub Meter (6)
  The meter to display can be selected in the sub meter menu; choices are hour meter, odometer, voltmeter and average fuel consumption. For details, refer to "Sub Meter Settings" on page (1-38).

  Hour Meter:
  The total accumulated operating hours since the machine started working are displayed in hours (h). One digit after the decimal point indicates tenths of an hour (6 minutes).

  Odometer:
  The total vehicle traveling distance can be displayed by changing the display mode.

  Voltmeter:
  The battery level is indicated by its voltage (V).

  Fuel Consumption:
  Indicates the amount of fuel consumed in L/h.
- F-N-R/Shift Position Indicators (7)(8)
  Indicates the state the machine is operating in (transmission state).

  F-N-R Display (7):
  Indicates the actual state of the transmission.

  Forward : F
  Neutral : N
  Reverse : R

  Shift Position Indicator (8):
  Indicates the gear selected with the shift switch.

  Forward : 1st to 4th gears
  Reverse : 1st to 4th gears
- Aftertreatment Device Indicator (9)
  Displays the condition of the aftertreatment device. For details, refer to "Aftertreatment Device Condition Display" on page (1-5).

- Forward/Reverse Selector Switch Indicator (10)
  Lights when the Forward/Reverse selector on the multi-function joystick lever can be used. For details, refer to “Forward/Reverse Switches” on page (1-130). If a problem occurs with either the right or left Forward/Reverse switches, the warning icon on the next page is displayed.

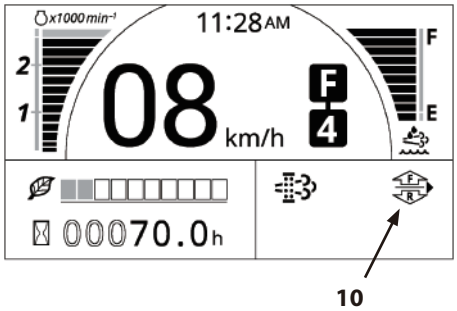

MNTL-MT-001-6 ja

Display	Description
Yellow	There is a problem in the Forward/Reverse switch (right) (1) system. Turn F-N-R control switch (2) OFF and operate using Forward/Reverse lever (3). Check and/or repair the different parts.
Yellow	There is a problem in the Forward/Reverse switch (right) and/or (left) systems. Operate using Forward/Reverse lever (3) and park in a safe location. Contact Authorized Dealer.
Red	There is a serious problem in the Forward/Reverse switch (right) and/or (left) systems. Operate using Forward/Reverse lever (3) and park in a safe location. Contact Authorized Dealer.

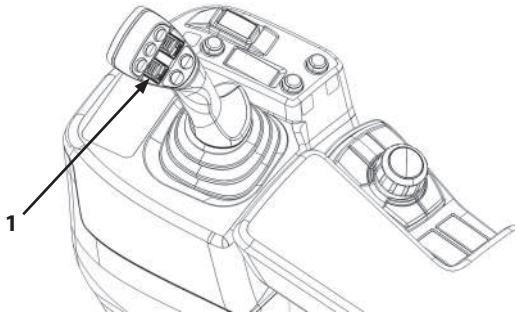

MNUD-01-099-4 ja

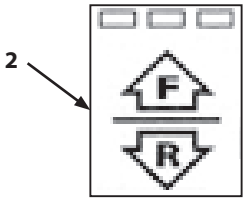

MNUD-01-209-2 ja

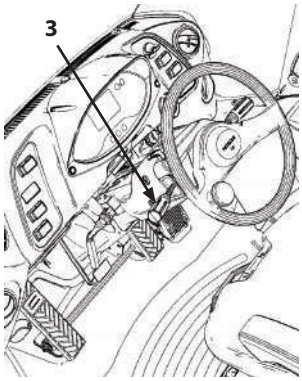

MNTL-01-044-1 ja

DEF/SCR System Alarm

When the DEF is low or there is a fault in the urea SCR system, the alarm symbol is displayed on the basic screen and engine output and speed are restricted.
The alarm symbol is displayed in the ECO indicator (1) display area on the main monitor.
Move as quickly as possible to a safe location and follow the message displayed and accompanying instructions for any other alarms symbols that are displayed.

NOTE

Alarm messages are displayed when the machine is in neutral or the parking brake is applied.

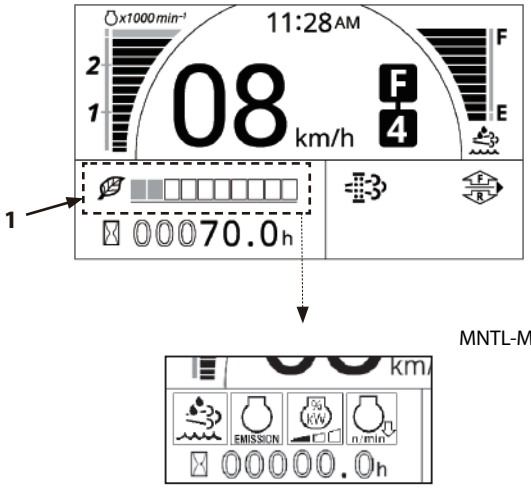

MNTL-MT-001-8 ja

MNUD-01-136 ja

Urea Alarms

Priori-ty	Alarm Mark in Indicator (1) Display Area	Description of Alarms
1	EMISSION	Engine switches to inducement mode and engine output gradu-ally drops if operation continues.
2		Problem with the aftertreatment device.
3		Refer to the table on the next page.
4		Refer to the table on the next page.
5	% kW	Engine output is restricted.
6	n/min	Engine speed is restricted.

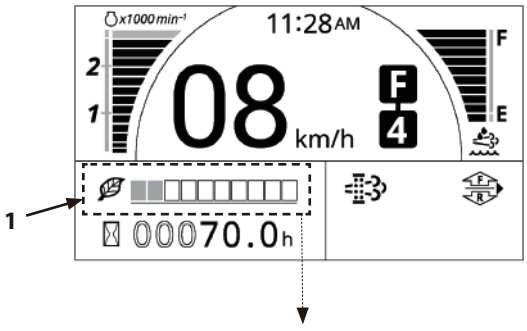

MNTL-MT-001-8 ja

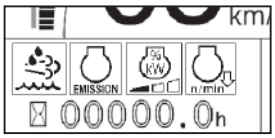

MNUD-01-136 ja

DEF Level Low

The display of DEF level gauge (2) changes depending on the amount of remaining DEF. Engine speed and output are as follows.

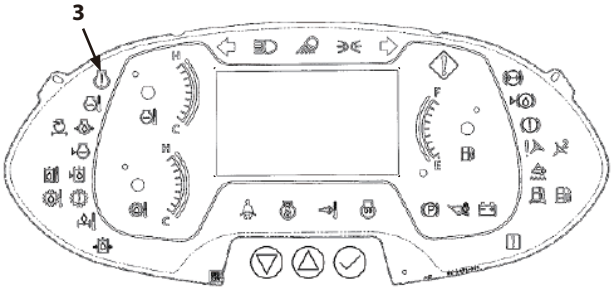

MNUD-01-030-4 ja

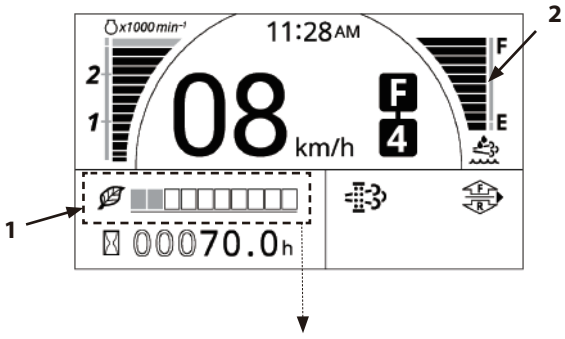

MNTL-MT-001-7 ja

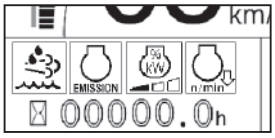

MNUD-01-136 ja

DEF Level Gauge (2)	Alarm Mark in Indicator (1) Display Area		Engine Trouble Indicator (3)	State/Inducement
(Yellow)	(Lit Yellow)	EMISSION	OFF	DEF level has become low. Refill DEF.
(Red)	(Slowly Blinks Red)	EMISSION % kW	OFF	DEF is low. Refill DEF. Engine output is restricted.
(Red)	(Quickly Blinks Red)	EMISSION % kW	(Yellow)	DEF tank is empty. Refill DEF. Engine output and speed are restricted.
	(Quickly Blinks Red)	EMISSION % kW n/min	(Yellow)	
	(Quickly Blinks Red)	EMISSION n/min	(Yellow)	

IMPORTANT

If there is no DEF, the engine will start, but work cannot be done. Do not use the machine until the DEF is filled.

Urea SCR System Malfunction

When there is a problem with the urea SCR system, the following alarm symbols may be displayed in the ECO indicator display area.

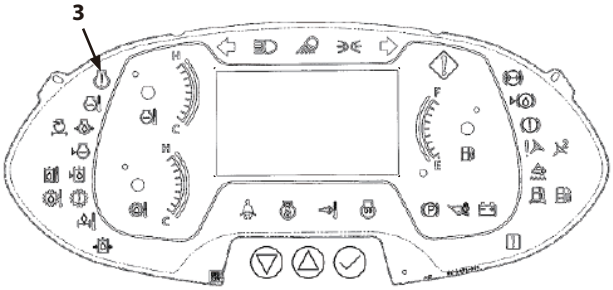

MNUD-01-030-4 ja

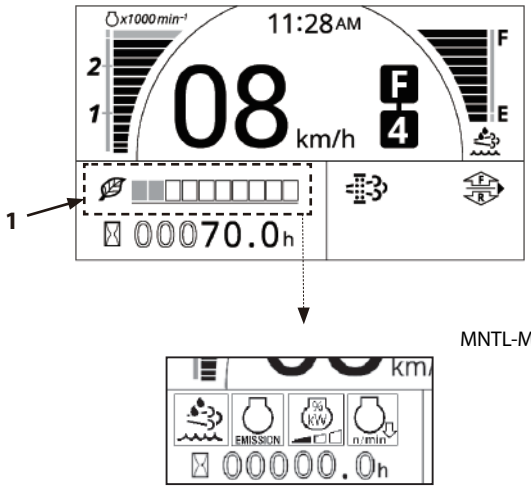

MNTL-MT-001-8 ja

MNUD-01-136 ja

Alarm Mark in Indicator (1) Display Area	Engine Trouble Indicator (3)	State/Inducement
(Lit)	(Yellow)	There is a problem with the urea SCR system.
(Lit)	(Yellow)	There is a problem with the urea SCR system. Engine output is restricted.
(Slowly Blinks)	(Yellow)	There is a problem with the urea SCR system. Engine output and speed are restricted. Contact Authorized Dealer.
(Slowly Blinks)	(Yellow→Red)	
(Quickly Blinks)	(Red)	

Displaying Main Monitor Main Menu

IMPORTANT

If the Forward/Reverse lever is put in forward or in reverse while the main menu screen is displayed, it switches to the basic screen. (No other screen can be displayed.)

1. While basic screen (1) is displayed, press either the monitor display selector switch (down) (2) or selector button (4) to display the main menu screen.
   The 6 kinds of tabs (5) illustrated at right are displayed on the left edge of the main menu screen.
2. Select the desired tab with either monitor display selector switch (down) (2) or monitor display selector switch (up) (3) and then pressing Monitor Display Mode Selector (4); settings for it can then be made.
3. For example, starting from the main menu, pressing monitor display selector switch (down) (2) one time highlights the 2nd display tab (6) from the top in blue.
4. Then pressing Monitor Display Mode Selector (4) opens the display settings menu.
5. Select the item to be configured with either monitor display selector switch (down) (2) or monitor display selector switch (up) (3) and then press Monitor Display Mode Selector (4).
6. Select Back at the top of the menu to return to the tab selection mode.
7. Select Exit at the bottom to return to the basic screen.

NOTE

Pressing monitor display selector switch (up) (3) once while on the main menu switches the display to the basic screen (1).
Pressing monitor display selector switch (down) (3) once while monitoring tab (7) is selected switches the display to basic screen (1).

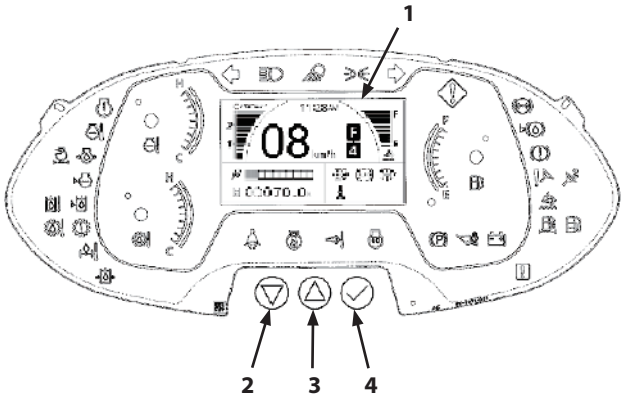

MNTL-01-048-1 ja

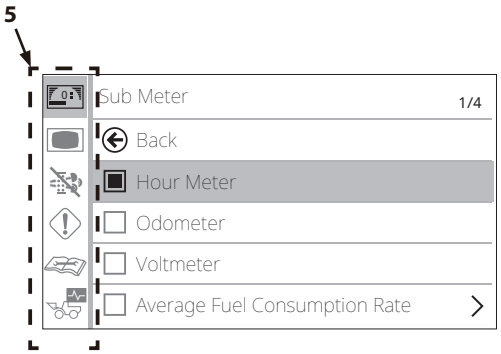

Main Menu Screen

MNUD-01-100-1 en_GB

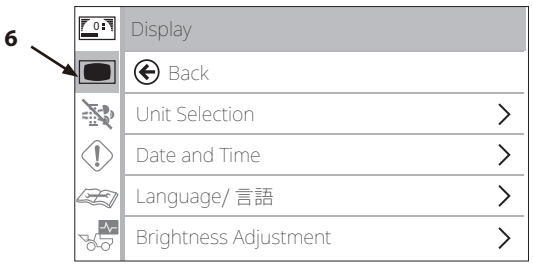

MNUD-01-101-1 en_GB

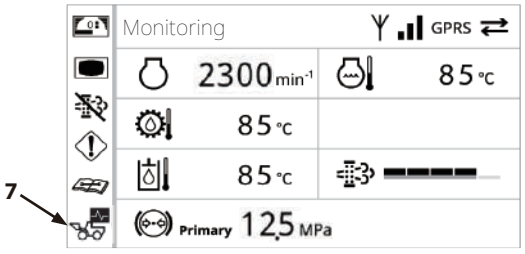

MNTL-MT-015-1 en_GB

Main Monitor Menu Configuration

The menu consists of the following screens.
There are 6 main menus and 9 sub menus.

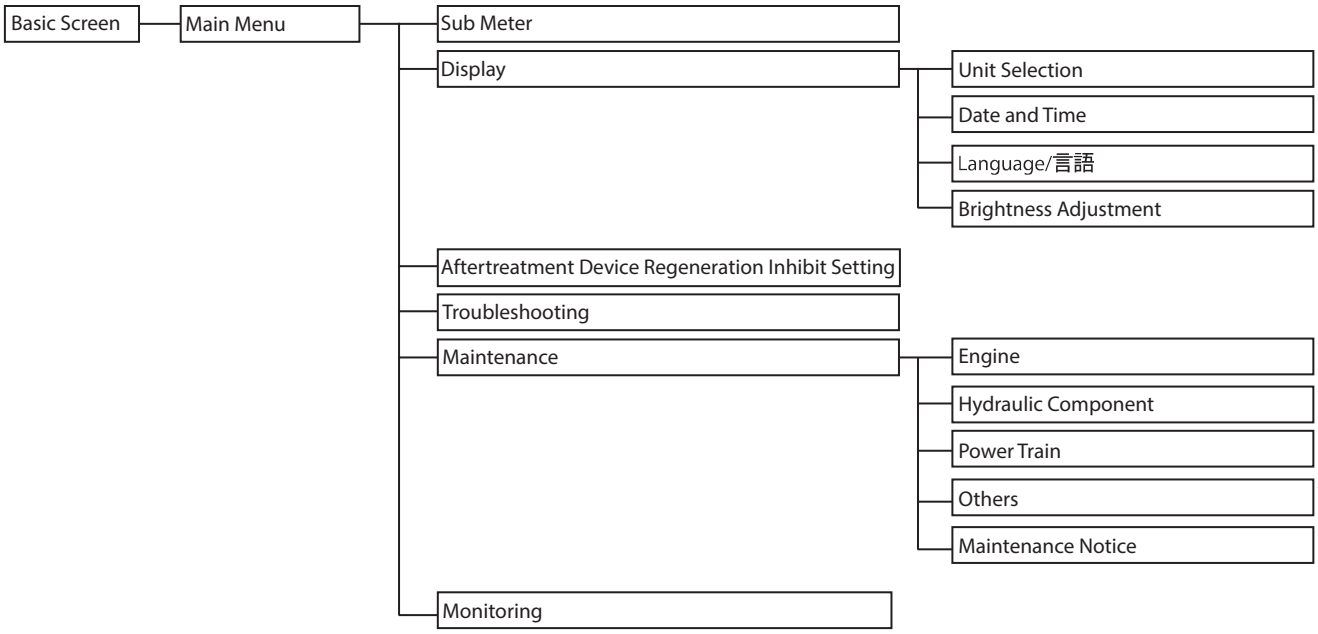

MNTL-01-011 en_GB

Configuring Sub Meters

The operator can configure the items to display on the main monitor, such as hour meter, odometer, voltmeter and average fuel consumption.

1. Select the sub meter tab (1) from the main menu.

   NOTE

   For how to select tabs, refer to "Main Monitor Main Menu" on page (1-36).

2. Press Monitor Display Mode Selector (2) to open sub meter screen (5).
3. Highlight the item to display on the basic screen with either monitor display selector switch (down) (3) or monitor display selector switch (up) (4). The check boxes of selected items light up green (6).
4. Select Fuel Consumption Rate (7) and press Monitor Display Mode Selector (2) to display the average fuel consumption rate screen (8).
   Information like time moving, amount of fuel used and average consumption can be checked from the average fuel consumption screen.
5. To clear the data on average fuel consumption, machine operation and average fuel consumption rate, select RESET (9) with either monitor display selector switch (down) (3) or monitor display selector switch (up) (4) and then press Monitor Display Mode Selector (2).

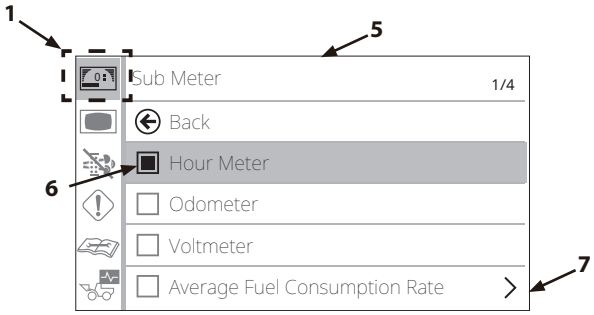

MNUD-01-100-2 en_GB

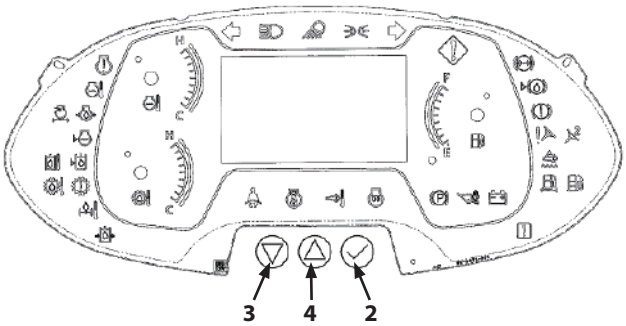

MNUD-01-030-5 ja

MNUD-01-038 ja

Odometer Display

MNUD-01-051 ja

Hour Meter Display

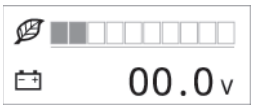

MNUD-01-052 ja

Voltmeter Display

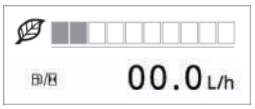

MNTL-01-224 ja

Average Fuel Consumption Rate Display

IMPORTANT

Total fuel consumption and the average fuel consumption rate depend on the operating environment and the operation method of the machine.
The values shown on the screen are just for reference. A difference could arise between actual fuel consumption and fuel consumption as displayed on the monitor unit.

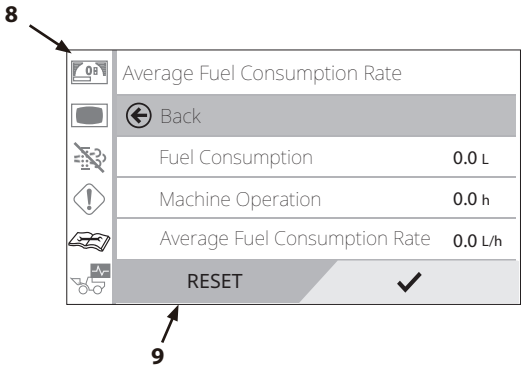

MNUD-01-059-1 en_GB

Display

Display parameters like units, date and time, language and brightness can be adjusted.

1. Select Display tab (1) from the main menu screen.

   NOTE

   For how to select tabs, refer to "Main Monitor Main Menu" on page (1-36).

2. Then pressing Monitor Display Mode Selector (2) opens the display settings screen (5).

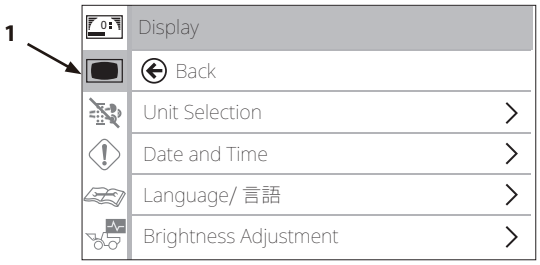

MNUD-01-101-2 en_GB

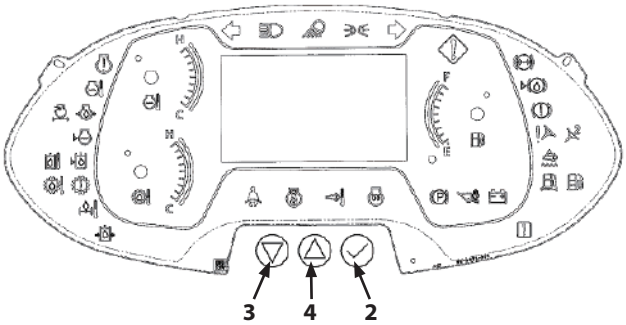

MNUD-01-030-5 ja

3. Select the item to be configured with either monitor display selector switch (down) (3) or monitor display selector switch (up) (4).
4. Then pressing Monitor Display Mode Selector (2) opens the settings screen of the selected item.

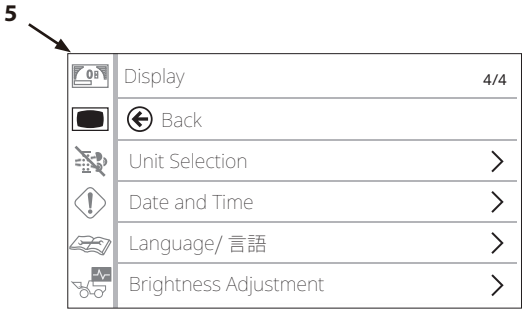

MNUD-01-107-1 en_GB

Unit Selection

The unit to be displayed on the main monitor can be switched between metric (SI units) and US units.

1. Select "Unit Selection" (1) from the display menu screen, then press Monitor Display Mode Selector (2).

   NOTE

   For how to select the display screen, refer to "Display" on page (1-39).

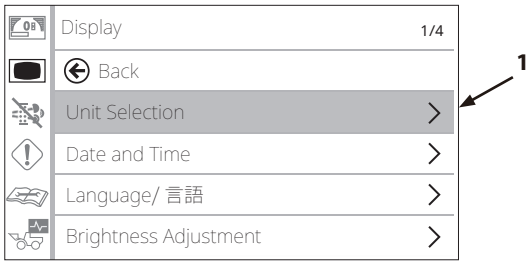

MNUD-01-108-1 en_GB

2. Select Metric or U.S. with either monitor display selector switch (down) (3) or monitor display selector switch (up) (4) and then press Monitor Display Mode Selector (2) to switch the units.

	Metric	U.S
Driving Speed	km/h	mph
Odometer	km	miles
Ave. Fuel	L L/h	gal gal/h

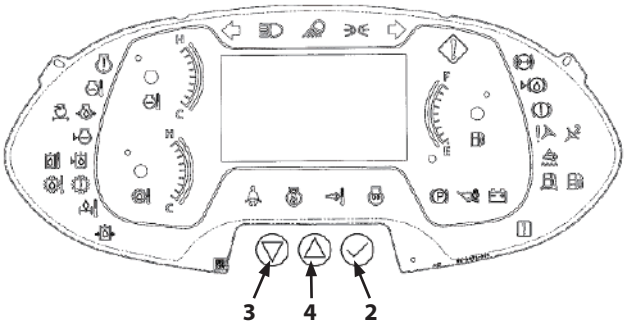

MNUD-01-030-5 ja

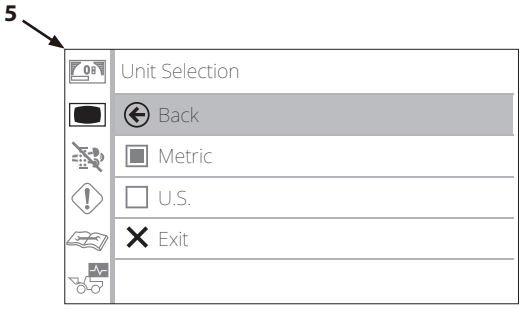

MNUD-01-112-1 en_GB

Date and Time

Time, date and display mode can be set on this screen.

Setting the Clock

1. Select “Date and Time” (1) from the display menu screen and then press Selector (2).

   NOTE

   For how to select the display screen, refer to “Display” on page (1-39).

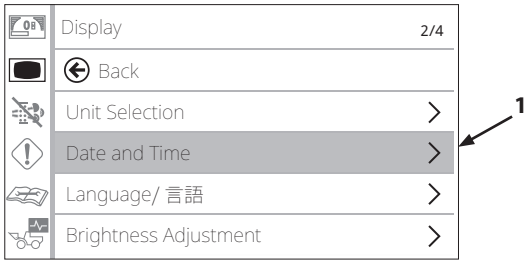

MNUD-01-109-1 en_GB

2. The Date and Time screen (5) opens.

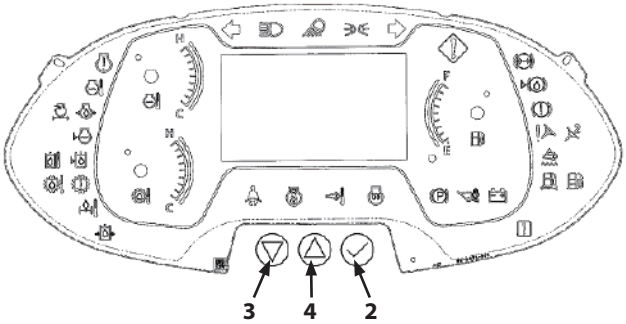

MNUD-01-030-5 ja

3. Press monitor display selector switch (down) (3) to highlight Time Setting (6) and then press Selector (2).

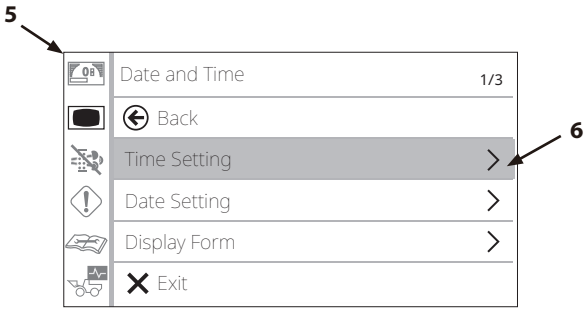

MNUD-01-113-1 en_GB

4. The current time is displayed on the setting screen.
   For example, if the current time is 19:22:
   When 24h is selected, “19:22” is displayed.
   When 12h is selected, “PM 7:22” is displayed.

   NOTE

   For how to select the date and time format, refer to “Display Format Settings” on page (1-45).

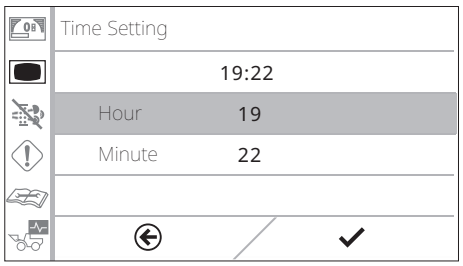

MNUD-01-114 en_GB

5. Select “Hour” or “Minute” with either monitor display selector switch (down) (3) or monitor display selector switch (up) (4).

6. The selected item (7) is highlighted in blue. Pressing Monitor Display Mode Selector (2) changes the highlighting (7) to orange.
   Press monitor display selector (up) (4) to increase the number by one, or press monitor display selector switch (down) (3) to lower it by one.
7. Once the number is correct, press Monitor Display Mode Selector (2).

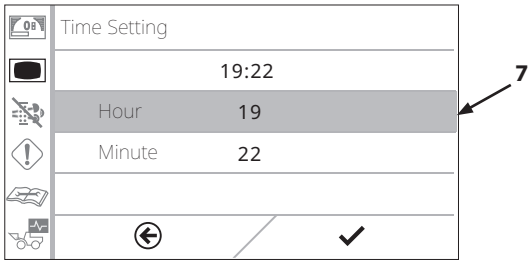

MNUD-01-114-1 en_GB

8. After adjusting both the hour and the minutes, select ✔ (8) and press the Monitor Display Mode Selector (2).

   NOTE

   Selecting ← (9) here cancels the time setting changes.

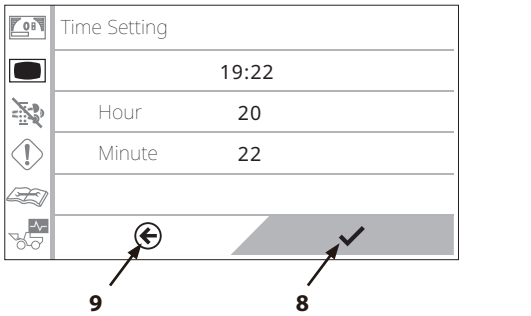

MNUD-01-115-1 en_GB

9. "Save setting. Is it OK?" appears. Press Monitor Display Mode Selector (2) to make the change.

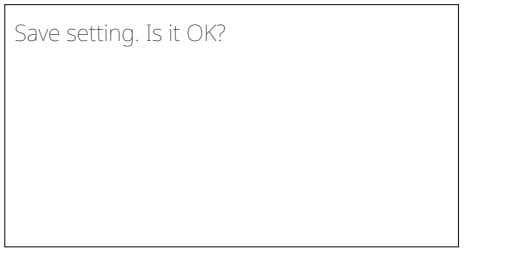

MNTK-01-100 en_GB

10. The message screen and progress bar are displayed while the settings are being updated.

    NOTE

    The time settings are applied to other controllers as well. If an error, such as a communication error, occurs, "Failed" is displayed and time settings are canceled. Consult Authorized Dealer.

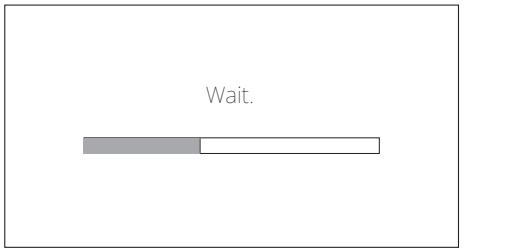

MNTK-01-101 en_GB

Date Settings

1. Select “Date and Time” (1) from the display menu screen and then press Selector (2).

   NOTE

   For how to select the display screen, refer to “Display” on page (1-39).

2. The Date and Time screen (5) opens.

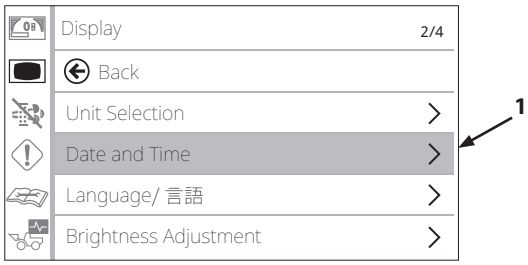

MNUD-01-109-1 en_GB

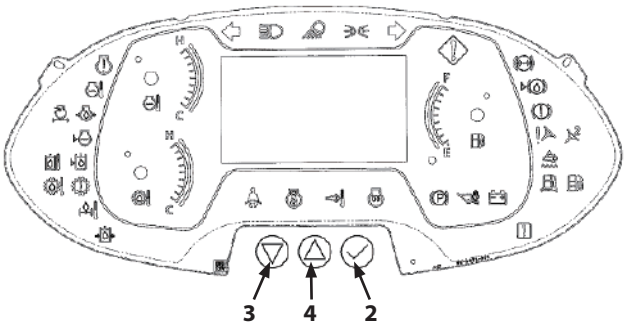

MNUD-01-030-5 ja

3. Press monitor display selector switch (down) (3) to highlight Date Setting (6) and then press Selector (2).

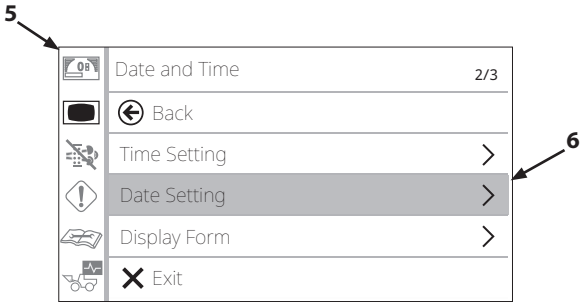

MNUD-01-117-1 en_GB

4. The date setting screen opens with the current date displayed in the selected format.

   NOTE

   For how to select the date format, refer to “Display Format Settings” on page (1-45).

5. Select “Year,” “Month” or “Day” with either monitor display selector switch (down) (3) or monitor display selector switch (up) (4).

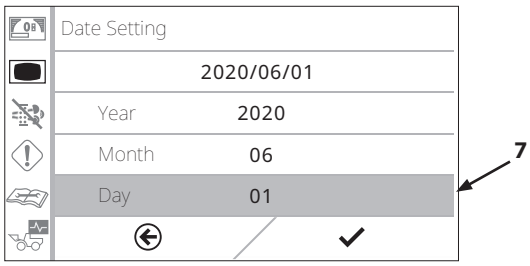

MNUD-01-118-1 en_GB

6. The selected item (7) is highlighted in blue. Pressing Monitor Display Mode Selector (2) changes the highlighting (7) to orange.
   Press monitor display selector (up) (4) to increase the number by one, or press monitor display selector switch (down) (3) to lower it by one.
7. Once the number is correct, press Monitor Display Mode Selector (2).

8. After adjusting all the values, select ✔ (8) and press the Monitor Display Mode Selector (2).

   NOTE

   Selecting ← (9) here cancels the date setting changes.

9. "Save setting. Is it OK?" appears. Press Monitor Display Mode Selector (2) to make the change.
10. The message screen and progress bar are displayed while the settings are being updated.

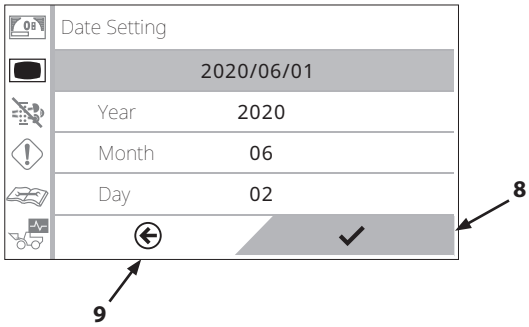

MNUD-01-138-1 en_GB

NOTE

The date settings are applied to other controllers as well. If an error, such as a communication error, occurs, "Failed" is displayed and date settings are cancelled. Consult Authorized Dealer.

Display Format Settings

1. Select "Date and Time" (1) from the display menu screen and then press Monitor Display Mode Selector (2).

   NOTE

   For how to select the display screen, refer to "Display" on page (1-39).

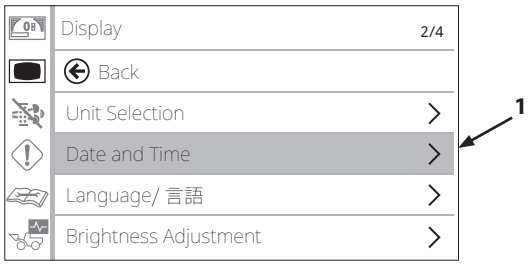

MNUD-01-109-1 en_GB

2. The Date and Time screen (5) opens.

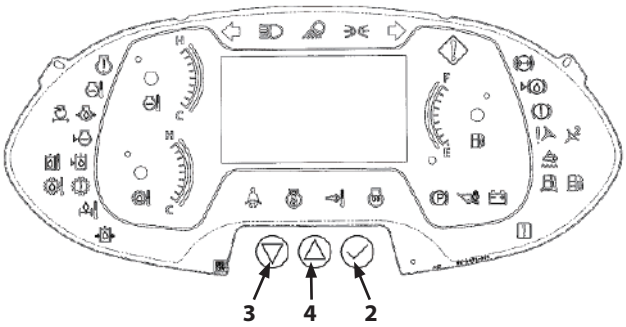

MNUD-01-030-5 ja

3. Press monitor display selector switch (down) (3) to select "Display Form" (6) and then press Monitor Display Mode Selector (2).

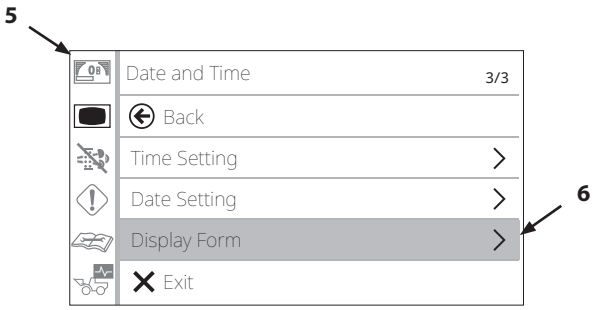

MNUD-01-119-1 en_GB

4. The display format settings screen opens with the current date and time displayed in the selected format.

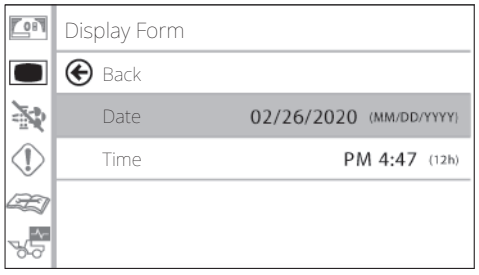

MNTL-MT-003 en_GB

5. Select “Date” or “Time” with either monitor display selector switch (down) (3) or monitor display selector switch (up) (4).
6. Select Date and press Monitor Display Mode Selector (2).
   Each time Monitor Display Mode Selector (2) is pressed, the format toggles through in the order YYYY/MM/DD→DD/MM/YYYY→YYYY→YYYY/MM/DD.

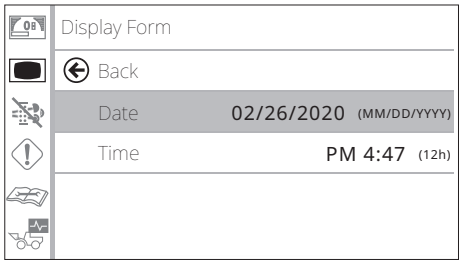

MNUD-01-045 en_GB

7. Select Time and press Monitor Display Mode Selector (2).
   The time display toggles between 12h and 24h each time Monitor Display Mode Selector (2) is pressed. When the 12h format is selected, the time is preceded by AM or PM.
8. Select the desired display format, select Back and press Monitor Display Mode Selector (2).

Language Settings

The language displayed on the main and sub monitors can be selected.

1. Select "Language/言語" (1) from the display menu screen and then press Monitor Display Mode Selector (2).

   NOTE

   For how to select the display screen, refer to "Display" on page (1-39).

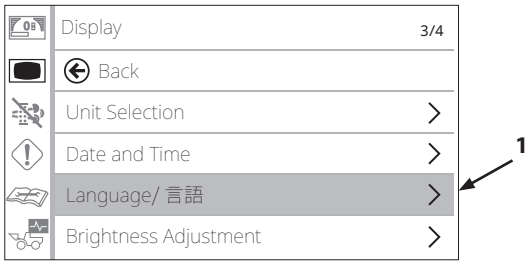

MNUD-01-110-1 en_GB

2. The Language/言語 screen (5) opens.

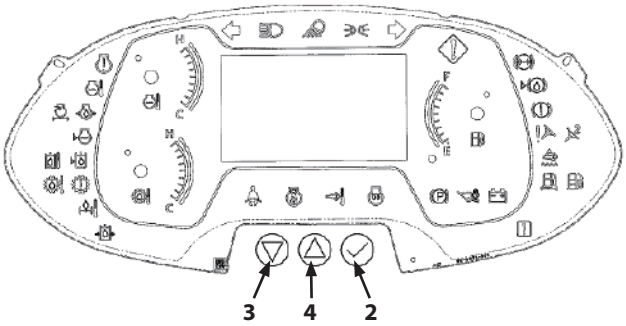

MNUD-01-030-5 ja

3. Select the desired language with either monitor display selector switch (down) (3) or monitor display selector switch (up) (4). Press Monitor Display Mode Selector (2) to make the change.
4. Once the language selection screen is closed, the system changes to the selected language.

   NOTE

   The language settings for the sub monitor also change, but the change is not reflected on the sub monitor until it is restarted. Turn the key switch OFF momentarily and then back ON.

MNUD-01-121-1 en_GB

Display Language List

Language	Screen Display	Language	Screen Display
English	English	Vietnamese	Tiếng Việt
Japanese	日本語	Myanmar	[illegible]
Traditional Chinese	繁體中文	Arabic	اللغة العربية
Spanish	Español	Persian	زبان فارسی
Italian	Italiano	Turkish	Türkçe
French	Français	Danish	Dansk
German	Deutsch	Estonian	Eesti
Dutch	Nederlands	Polish	Polski
Russian	Русский	Icelandic	Íslenska
Portuguese	Português	Croatian	Hrvatski
Simplified Chinese	简体中文	Slovenian	Slovenščina
Finnish	Suomi	Romanian	limba română
Greek	Ελληνικά	Bulgarian	Български език
Swedish	Svenska	Lithuanian	Lietuvių kalba
Norwegian	Norsk	Czech	Čeština
Slovak	Slovenčina	Latvian	Latviešu
Serbian	Srpski	Hungarian	Magyar
Hebrew	עברית		

Brightness Adjustment

The brightness of the main LCD monitor can be adjusted.

1. Select "Brightness Adjustment" (1) from the display menu screen and then press Monitor Display Mode Selector (2).

   NOTE

   For how to select the display screen, refer to "Display" on page (1-39).

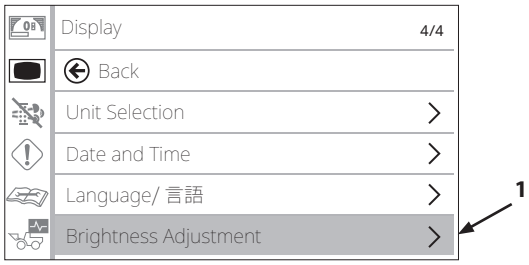

MNUD-01-111-1 en_GB

2. The brightness adjustment screen (5) opens.

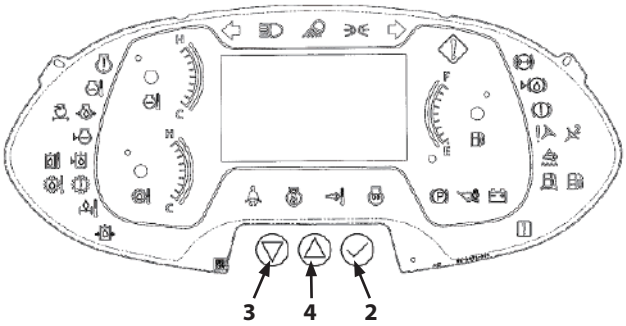

MNUD-01-030-5 ja

3. Press monitor display selector (up) (4) to increase the brightness, or press monitor display selector switch (down) (3) to decrease it.
   Brightness can be changed up to 100%, 5% at a time in 20 steps. (Level 0% (off) cannot be selected.)

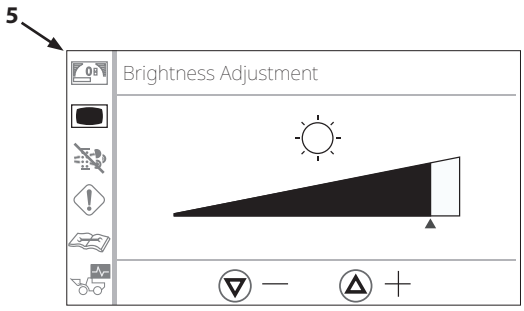

MNUD-01-122-1 en_GB

4. Once the desired brightness is reached, press Monitor Display Mode Selector (2).

   NOTE

   When lights are turned ON, it enters the night mode and a moon symbol (6) is displayed on the screen. Brightness can be adjusted for day mode and night mode respectively.

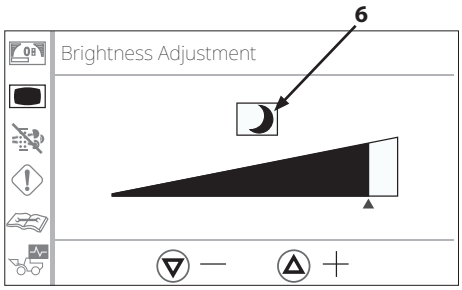

MNUD-01-123-1 en_GB

Aftertreatment Device Regeneration Inhibition

IMPORTANT

Aftertreatment device regeneration can be inhibited from this screen, to prevent auto regeneration while operating the machine in a dusty area or indoors.

1. Select Aftertreatment Device Regeneration Inhibit tab (1) from the main menu.

   NOTE

   For how to select tabs, refer to "Main Monitor Main Menu" on page (1-36).

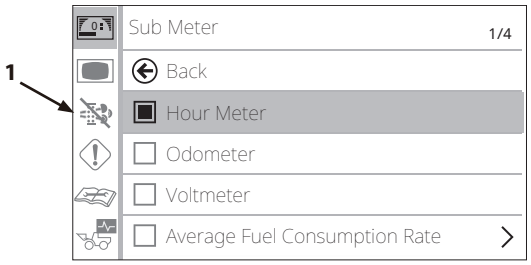

MNUD-01-100-3 en_GB

2. Press Monitor Display Mode Selector (2) to open aftertreatment device regeneration inhibition confirmation screen (5).

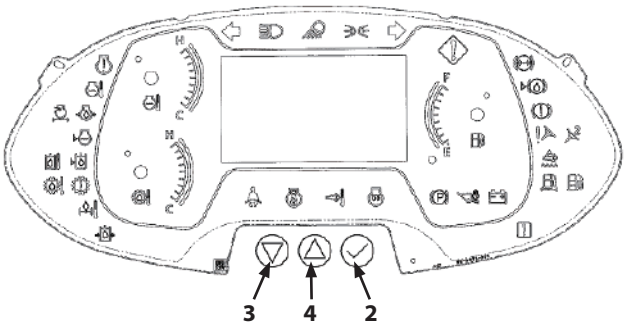

MNUD-01-030-5 ja

3. Check the message displayed on the screen and then press Monitor Display Mode Selector (2).

MNUD-01-102-1 en_GB

4. Press monitor display selector switch (down) (3) to select ✔ (6) and then press Monitor Display Mode Selector (2).

   NOTE

   Selecting ← (7) here cancels the aftertreatment device regeneration inhibit setting changes.

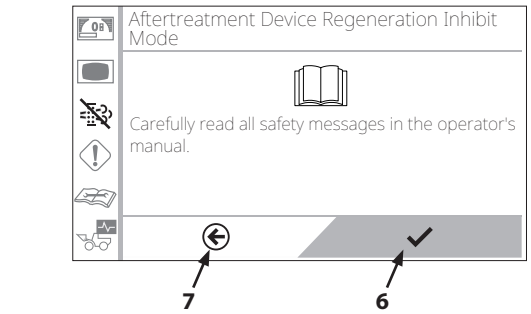

MNUD-01-124-1 en_GB

5. Aftertreatment Device Regeneration Inhibit Mode screen (8) opens.
   Select either Auto/Manual or Manual Only and then Monitor Display Mode Selector (2).
   The check box of the selected item lights up green.
6. To turn the aftertreatment device regeneration inhibit function ON/OFF, press aftertreatment device regeneration inhibit switch (10) on switch panel (9).
   For details on operating aftertreatment device regeneration inhibit switch (10), refer to "Aftertreatment Device Regeneration Inhibit Switch" on page (1-134).

IMPORTANT

If the machine is operated with the regeneration of the aftertreatment device inhibited, the device will end up getting clogged.
When an aftertreatment device regeneration request is displayed, move the machine promptly to a safe location and perform a manual regeneration according to the specified procedure. Failure to perform a manual regeneration may result in damage to the aftertreatment device. For how to perform a manual regeneration, refer to "Manual Regeneration of the Aftertreatment Device" on page (1-7) or "Manual Regeneration" on page (5-7).

NOTE

If the manual regeneration switch is pressed while the aftertreatment device regeneration inhibit setting is ON, the operation is disabled, so an advice message to cancel the setting is displayed. Follow the instructions on the main monitor.

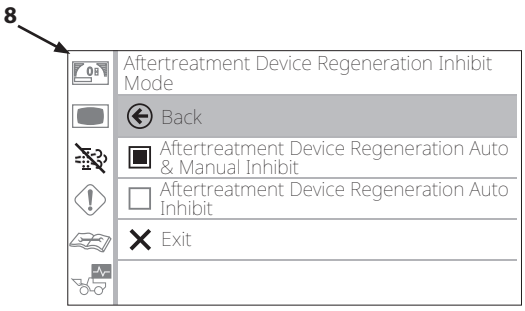

MNUD-01-125-1 en_GB

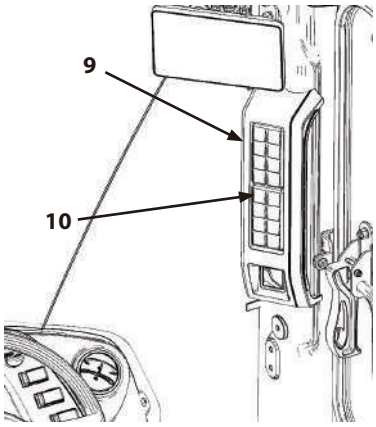

MNTL-01-039-3 ja

MNUD-01-202-3 ja

Troubleshooting

Active fault code(s) are displayed for each controller, indicating where they were generated.

1. Select troubleshooting tab (1) from the main menu.

   NOTE

   For how to select tabs, refer to "Main Monitor Main Menu" on page (1-36).

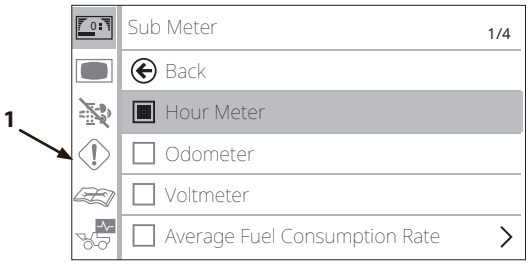

MNUD-01-100-4 en_GB

2. Press Monitor Display Mode Selector (2) to open troubleshooting menu screen (5).

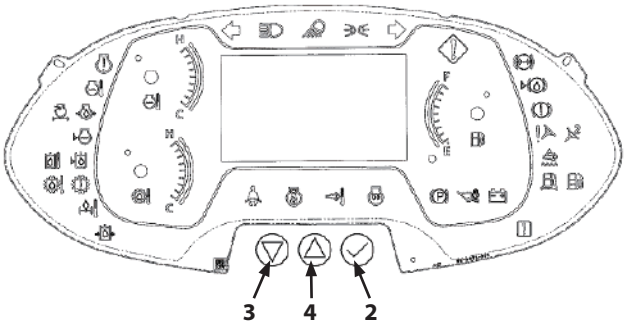

MNUD-01-030-5 ja

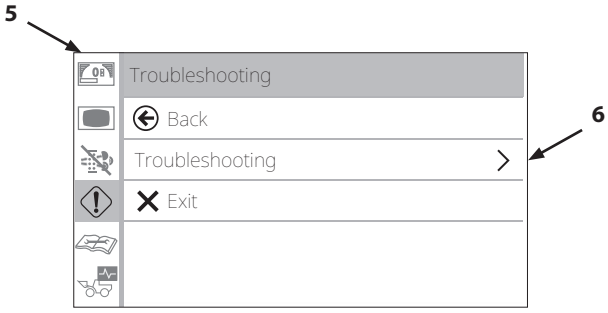

MNUD-01-103-1 en_GB

3. Select Troubleshooting (6) and press Selector (2) to display troubleshooting screen (7).
   The number of active fault codes are indicated in parentheses to the right of their corresponding controller.

   NOTE

   Fault code (00) means there are no active faults.

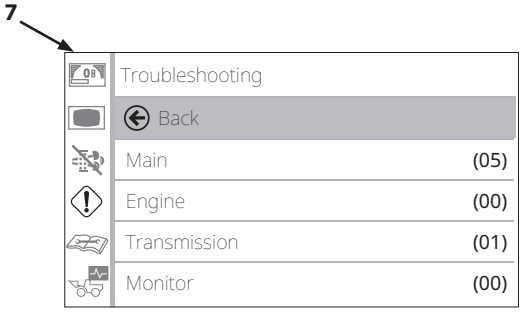

MNUD-01-126-1 en_GB

4. Select a controller with either monitor display selector switch (down) (3) or monitor display selector switch (up) (4).
   Then press Monitor Display Mode Selector (2) to display its active fault codes.
   (Here, the main controller is selected.)

   NOTE

   Controller without any active faults cannot be selected.

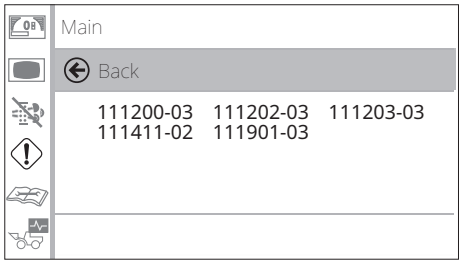

MNUD-01-127 en_GB

Up to 18 fault codes can be displayed in the list. If more than 18 fault codes are active, they are displayed in the order received.

IMPORTANT

Consult Authorized Dealer with troubleshooting results.

Maintenance

The maintenance screen allows changes to the maintenance notice function, checking the time remaining for maintenance items and changes to maintenance intervals.

1. Select Maintenance tab (1) from the main menu.

   NOTE

   For how to select tabs, refer to "Main Monitor Main Menu" on page (1-36).

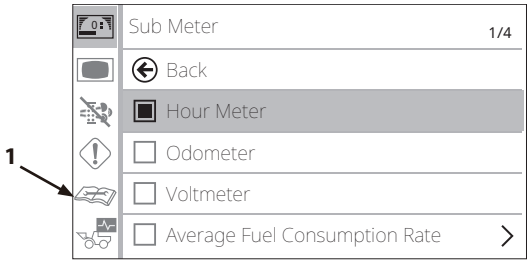

MNUD-01-100-5 en_GB

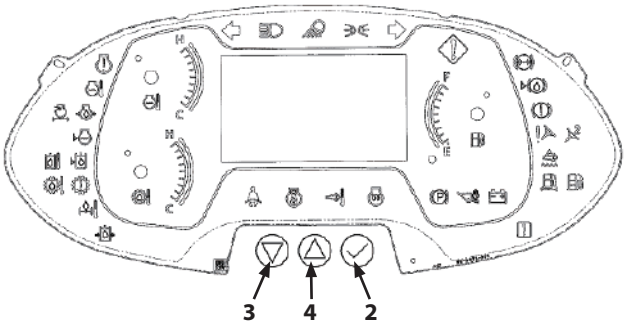

MNUD-01-030-5 ja

2. Press Monitor Display Mode Selector (2) to open maintenance menu screen (5).

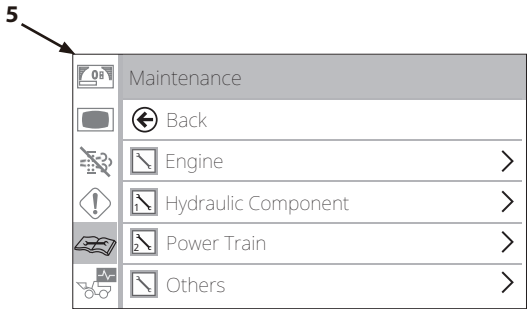

MNUD-01-104-1 en_GB

3. Select a maintenance item with either monitor display selector switch (down) (3) or monitor display selector switch (up) (4).

Maintenance Item and Default Intervals

Category	Item	Default Settings
Engine	• Engine Oil	500
	• Engine Oil Filter	500
	• Muffler Filter	4500
	• DEF/AdBlue Supply Module Main Filter	4500
	• Fuel Solenoid Pump Filter	1000
	• Fuel Filter	1000
	• Air Cleaner Element	250
	• Coolant	3000
	• DEF/AdBlue Filler Port Filter	4500
Hydraulic Components	• Hydraulic Oil	4000
	• Pilot Hydraulic Oil Filter	2000
	• Hydraulic Oil Full-Flow Filter	1000
	• HST Charge Filter	500
Power Train	• Transmission Oil	1000
	• Transmission Oil Filter	500
	• Front Axle Oil	2000
	• Rear Axle Oil	2000
Others	• Air Conditioner Filter	1000
	• User Setting 1	0
	• User Setting 2	0

Maintenance Notices

1. Select Maintenance tab (1) from the main menu.

   NOTE

   For how to select tabs, refer to "Main Monitor Main Menu" on page (1-36).

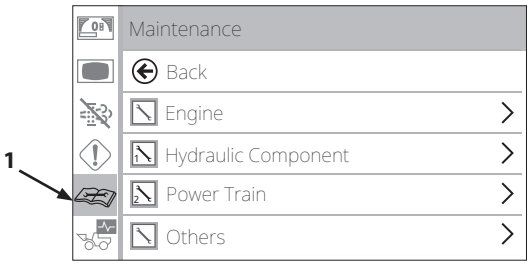

MNUD-01-104-2 en_GB

2. Press Monitor Display Mode Selector (2) to open maintenance menu screen (5).

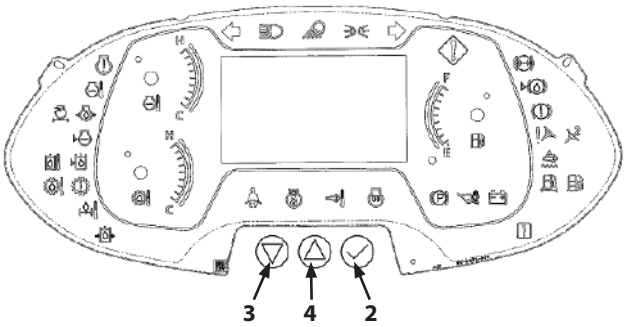

MNUD-01-030-5 ja

3. Press monitor display selector switch (down) (3) to select Maintenance Notice (5).
4. Each time Monitor Display Mode Selector (2) is pressed, check box (5) of the notice function is toggled on/off in green.
5. When the notice function is ON, check box (5) is lit.
   [ON]
   If a maintenance item is within 20 hours of replacement, the maintenance notice screen is displayed for 5 seconds when the key switch is turned to ON. For details on the maintenance notice screen, refer to "Maintenance Notices" on page (1-26).
   [OFF]
   Notices are not issued.

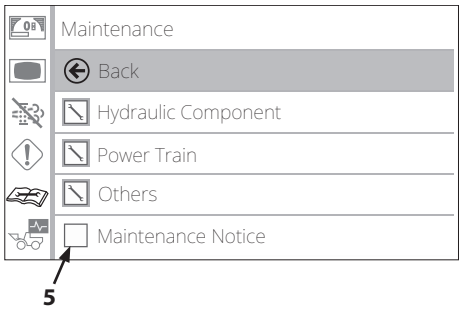

MNUD-01-128-1 en_GB

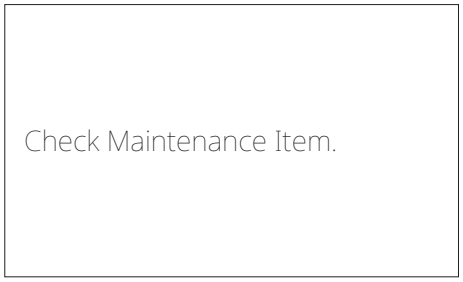

MNUD-01-035 en_GB

Remaining Time and Maintenance Interval

1. Select Maintenance tab (1) from the main menu.

   NOTE

   For how to select tabs, refer to "Main Monitor Main Menu" on page (1-36).

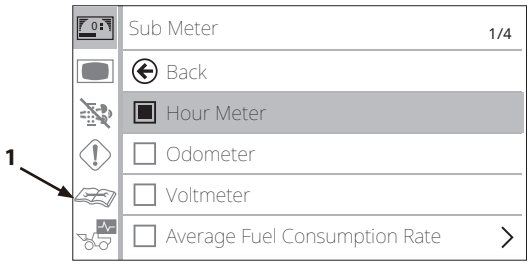

MNUD-01-100-5 en_GB

2. Press Monitor Display Mode Selector (2) to open maintenance menu screen (5).
3. Select a maintenance item with either monitor display selector switch (down) (3) or monitor display selector switch (up) (4).
   (Here, Hydraulic Component (5) is selected.)

   NOTE

   If maintenance item(s) have passed their specified time, a wrench symbol (6) is displayed next to the maintenance system. The number of maintenance items past their specified time is displayed below and to the left of the wrench symbol.

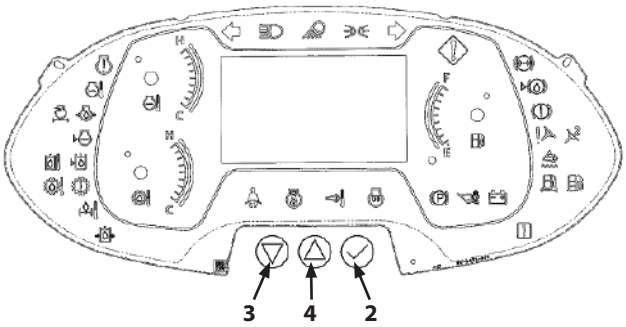

MNUD-01-030-5 ja

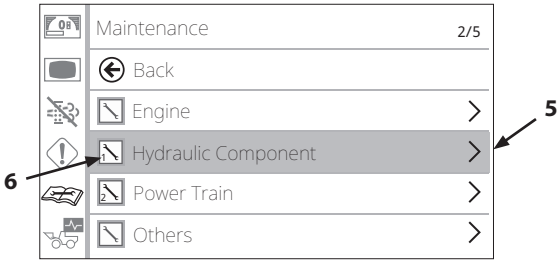

MNUD-01-129-1 en_GB

4. Select a maintenance item with either monitor display selector switch (down) (3) or monitor display selector switch (up) (4) and then press Monitor Display Mode Selector (2). (Here, Hydraulic Oil (7) is selected.)

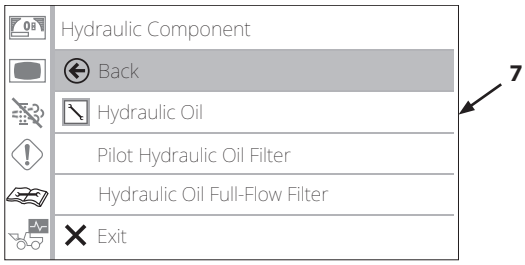

MNUD-01-130-1 en_GB

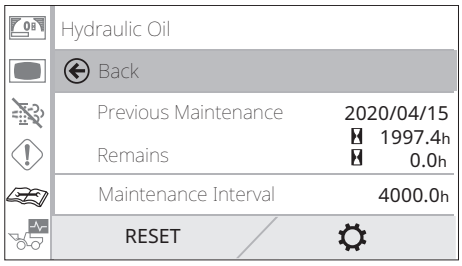

MNTL-MT-009 en_GB

5. Press monitor display selector switch (down) (3) to select RESET (8) and reset the remaining time.
   If monitor display selector switch (down) (3) is pressed again, it moves to gear icon (9), which allows the maintenance interval to be changed.

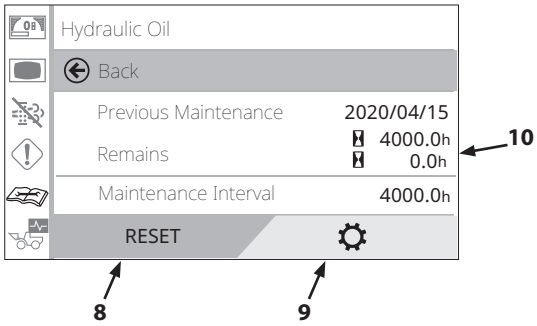

MNTL-MT-010-1 en_GB

[Data Reset]
When RESET (8) is selected, the remaining time is reset to maintenance interval (10), and the last maintenance is updated to the current date.

[Setting the Maintenance Interval]
When gear icon (9) is selected, hours (11) of the maintenance interval is highlighted, which allows the hours to be changed using either monitor display selector switch (down) (3) or monitor display selector switch (up) (4). Each time a switch is pressed, the hour changes 10 hours at a time.
Pressing Monitor Display Mode Selector (2) displays the message “Save setting. Is it OK?”

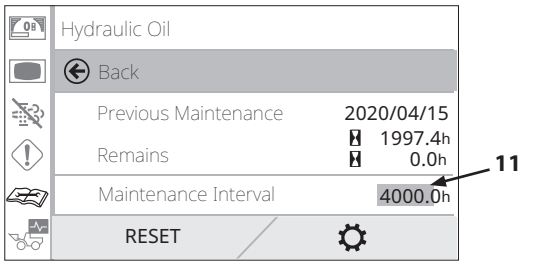

MNTL-MT-011-1 en_GB

Select ✔ and press Monitor Display Mode Selector (2) to make the change.
Select ← and press Monitor Display Mode Selector (2) to cancel the change and return the maintenance interval to the previous setting.

Monitoring

The system allows the current engine speed, oil temperatures, brake pressure, communication status and PM level to be checked.

1. Select Monitoring tab (1) from the main menu.

   NOTE

   For how to select tabs, refer to "Main Monitor Main Menu" on page (1-36).

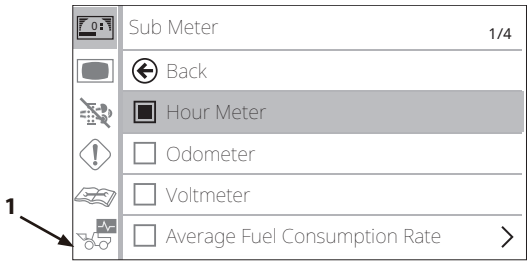

MNUD-01-100-6 en_GB

2. Then pressing Monitor Display Mode Selector (2) opens the monitoring screen.

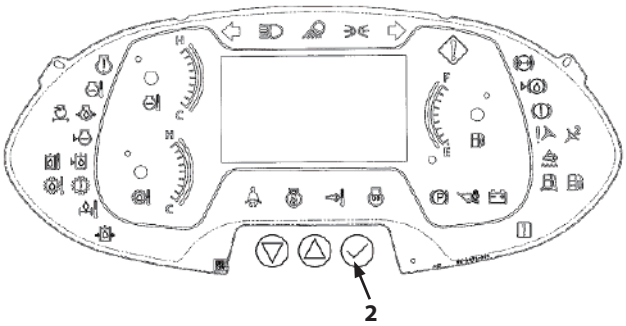

MNUD-01-030-6 ja

Monitored Items:

- Antenna Reception (3)
- GPRS Communication Status (4)
- Engine Speed (5)
- Coolant Temperature (6)
- Transmission Oil Temperature (7)
- Hydraulic Oil Temperature (8)
- PM Level (9)
  The amount of PM accumulated in the aftertreatment device is indicated by 20% bars in a graph. When the bar graph reaches 100%, all 5 bars turn red.
- Service Brake Primary Pressure (10)

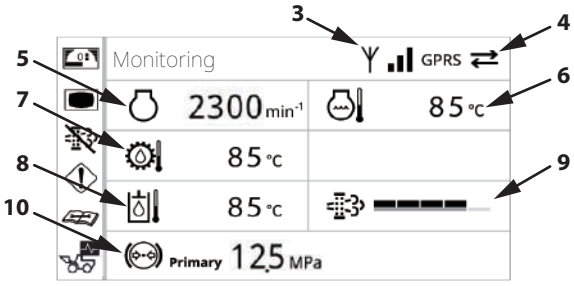

MNTL-MT-015-2 en_GB

Sub Monitor

Sub Monitor Controller

Sub monitor controller (1) is on the right console and has a rotary controller. Use it for operating multi-function sub monitor (2) and making settings.

The layout and functions of sub monitor controller switches is described below.

- Selector Knob (4)

Push down	: Pressing the knob while the basic screen is displayed opens the main menu. Pressing while on the main menu sets the operation.
Rotate	: Moves the cursor.

NOTE

When selector knob operations are available it is displayed on the left edge of the screen.

- Backward Switch (5)
  Goes back to the previous screen.
- Home Switch (6)
  Returns to the basic screen, whatever the current screen.
  When an alarm occurs, pressing home switch (6) opens the alarms list screen. For details on the alarms list, refer to “List of Alarms” on page (1-77).
- Screen Select Switch (7)
  Selects the pattern for displaying the payload data.
- Switch Panel Settings Confirmation Switch (8)
  Press to check the current settings of switch panel (3).
- Rear View Camera Switch (9)
  Changes the size of the rear view camera view displayed on sub monitor (2).

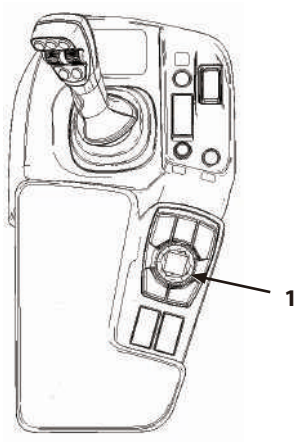

MNTL-01-049-1 ja

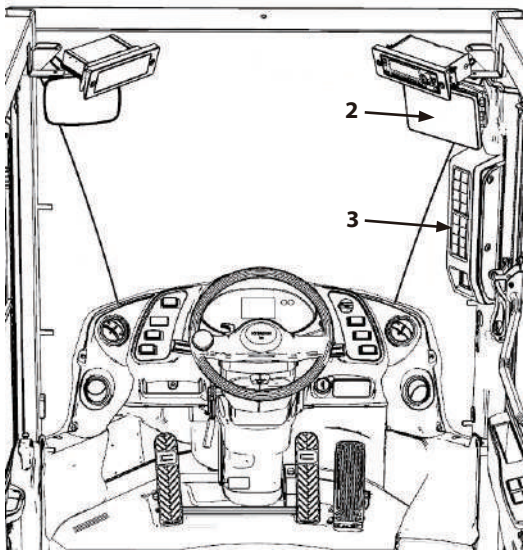

MNTL-01-041-3 ja

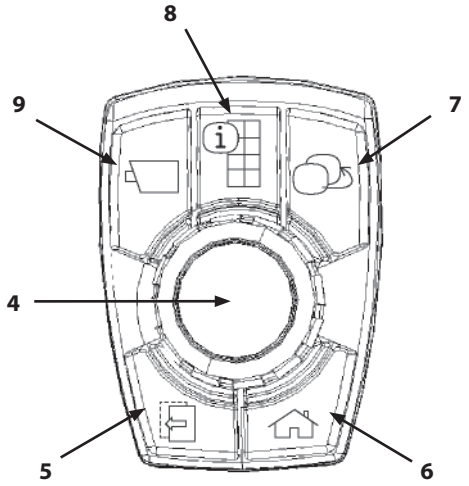

MNUD-01-252-2 ja

Checking Panel Switch Settings

A list of settings of each switch on switch panel (1) can be displayed on sub monitor (2).

IMPORTANT

This function can only be used when the vehicle is stopped. When the vehicle starts moving, the display switches immediately to the basic screen.

1. Stop the machine. Display the basic screen on sub monitor (2) and press switch panel settings confirmation switch (3).
2. There are 2 screens, for the upper and lower blocks of switch panel (1). Turn selector knob (4) to toggle the screens.
   Each item is shown with its switch icon. See the next page.
3. Return to the basic screen by pressing switch panel settings confirmation switch (3), backward switch (5) or home switch (6).

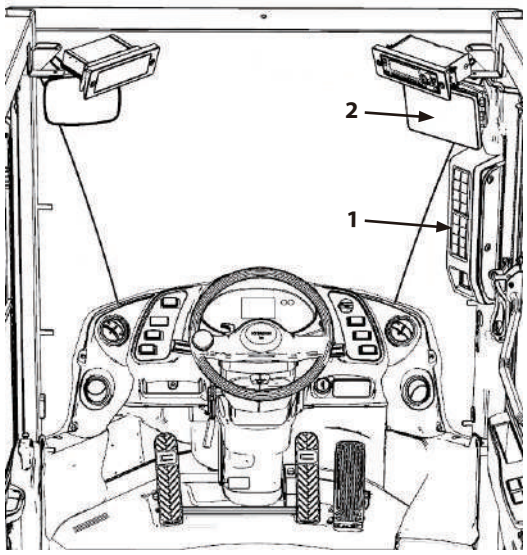

MNTL-01-041-4 ja

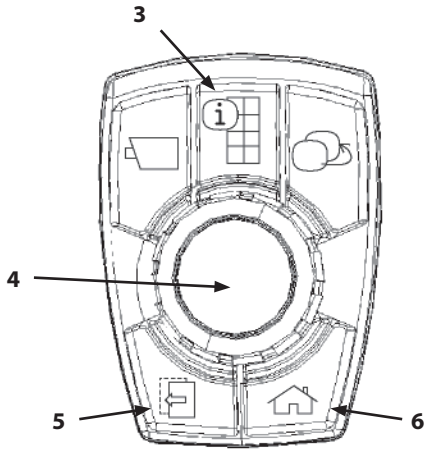

MNUD-01-252-3 ja

Display Items

7- Deceleration Mode Switch
8- Auto Shut-Down Switch (Optional)
9- (Not Used)
10- (Not Used)
11- Traction Control Switch
12- Fan Reverse Rotation Switch (Optional)
13- Forward/Reverse Selector Switch
14- Approach Speed Control Switch

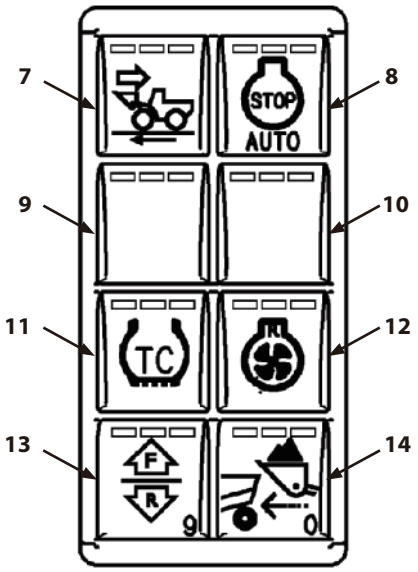

MNTL-01-051-1 ja

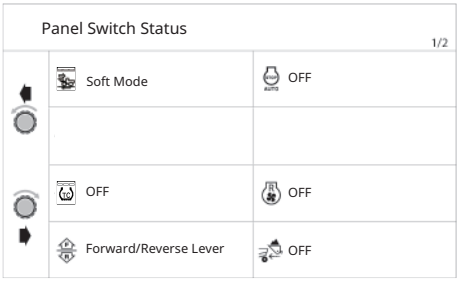

MNTL-MT-013 en_GB

15- Aftertreatment Device Regeneration Switch
16- Power Mode Switch
17- Aftertreatment Device Regeneration Inhibit Switch
18- Ride Control Switch
19- Front Wiper Switch
20- Rear Wiper Switch
21- Front Washer Switch
22- Rear Washer Switch

NOTE

Refer to pages (1-122) "Switch Panel (Illustration Contents)" for information on the switch panel.

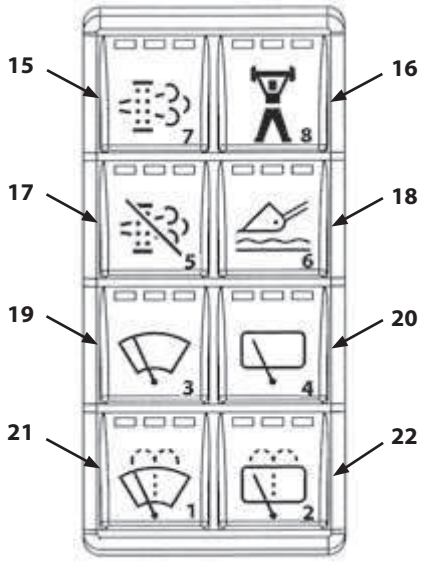

MNUD-01-202-4 ja

Panel Switch Status 2 / 2		
	OFF	Standard Mode
	Disable	Auto
	Fast	OFF
	ON	OFF

MNUD-01-261 en_GB

Rear View Camera Display Modes

Pressing rear view camera switch (1) changes the size of the rear view image displayed on the sub monitor.

IMPORTANT

The rear view camera image is only intended as an aid. The actual position of people and objects may be different from how they appear in the rear view camera image. When operating the machine, always maintain vigilant situational awareness.

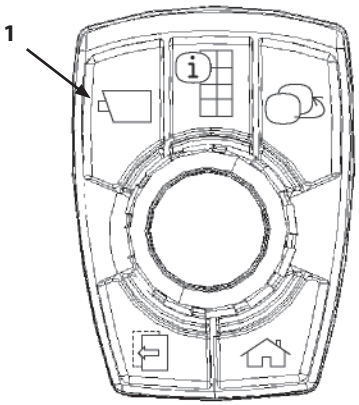

MNUD-01-252-4 ja

1. On the basic screen of the sub monitor, the rear view camera image is displayed standard size (2) along with other information.
   Press rear view camera switch (1).
2. The rear view camera image is displayed full-screen (3) on the sub monitor.
3. Pressing rear view camera switch (1) toggles between standard size (2) and full-screen (3) view of the rear view camera image.

MNTL-01-233-1 ja

MNUD-01-284-1 ja

CAUTION

It takes a moment to switch the size the rear view camera image is displayed. Refrain from switching the size frequently.

IMPORTANT

Before moving the machine, clean the camera lens and the monitor to ensure a clear image on the monitor.

NOTE

The monitor display and camera lens are made of plastic. Wipe with a clean, damp cloth when cleaning them. Never use an organic solvent.

IMPORTANT

- **Never attempt to change the mounting position of the rear view camera.**
- **If there is a problem with the rear view camera monitor, contact Authorized Dealer.**

Displaying Sub Monitor Basic Screen

Once the key switch is put in the ON position, the starting screen is displayed for 2 seconds and then the basic screen is displayed.

Starting Screen

MNTL-MT-016 ja

The operator setting screen (1) is displayed for 7 seconds to allow the ID of the operator who will start working to be selected. For information on selecting the ID of the operator who will start work, refer to “Operator Selection (During Startup)” on page (1-66).

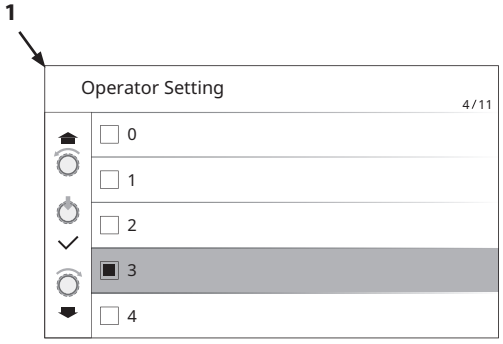

MNUD-01-254-1 en_GB

After the operator setting screen is displayed, or if home switch (2) is pressed while on the operator setting screen, the display shifts to basic screen (3). It displays the front attachment, payload checker, rear view camera and aerial angle images, as well as any operation guidance messages.

The sub monitor has 10 main menus and 24 sub-menus, which can be used in combination with switches on the switch panel. For details, refer to “Layout of Sub Monitor Menus” on page (1-76).

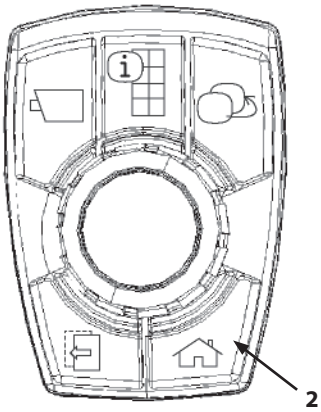

MNUD-01-252-5 ja

MNTL-01-233-2 ja

Operator Setting Selection (At Startup)

Various operating conditions can be set up from sub monitor menus. Different settings can be saved for up to 11 operators, using the numbers 0 to 10. Particular operating conditions can be specified by selecting an operator number when starting work.

NOTE

The default setting is saved as operator number 0.

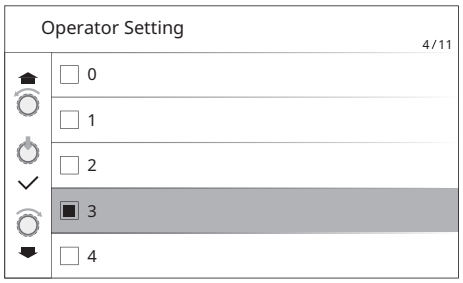

MNUD-01-254 en_GB

IMPORTANT

The selected operator number is saved when the start key is turned OFF. So there is no need to select the same operator number at startup.

1. Turn selector knob (1) to select an operator number.
2. Press selector knob (1) to turn on the check box of the selected operator number; the settings saved for the selected operator number are applied to the machine.

   NOTE

   - *Pressing backward switch (2) while the operator setting screen is displayed shifts the display to the main menu.*
   - *The operator setting screen can be selected from the sub monitor main menu as well. For details, refer to "Operator Selection Screen" on page (1-81).*

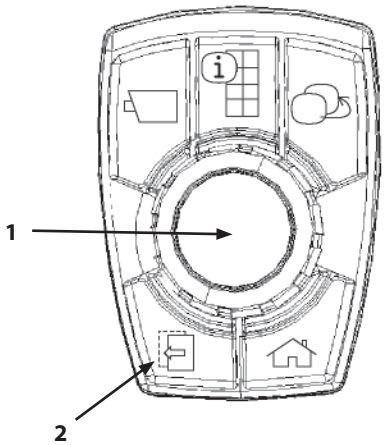

MNUD-01-252-1 ja

Sub Monitor Basic Screen Configuration

1- Lift Arm, Bucket Kick Out, Detent Status
2- 3rd/4th Lever Detent Status
3- Current Payload Data (Payload Checker)
4- Add Mode Icon (Payload Checker)
5- Tip-Off Mode Icon (Payload Checker)
6- Target Load (Payload Checker)
7- Target Material (Payload Checker)
8- Operator No.
9- Rear Obstacle Detection and Warning (Optional)
10- Rear View Camera Image
11- Advice Messages
12- Aerial Angle Images (Optional)
13- Rear Obstacle Detection System (Automatic Speed Reduction) Assist System (Optional)
14- Hour Meter (ZW160PL-7 Only)
15- Volt Meter (ZW160PL-7 Only)

NOTE

The layout of the basic screen varies with payload checker settings, machine configuration, selected devices, etc.

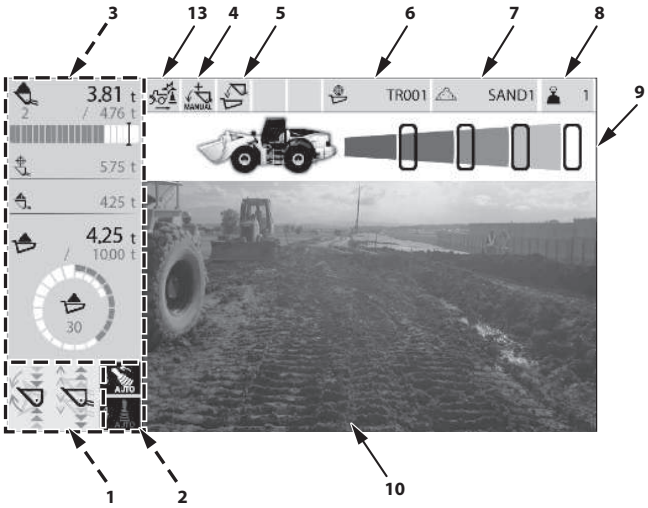

MNTL-01-241-2 ja

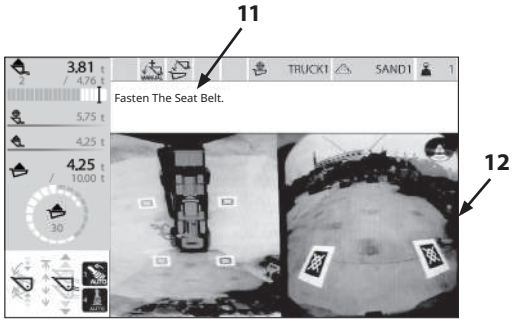

MNTL-MT-006-1 en_GB

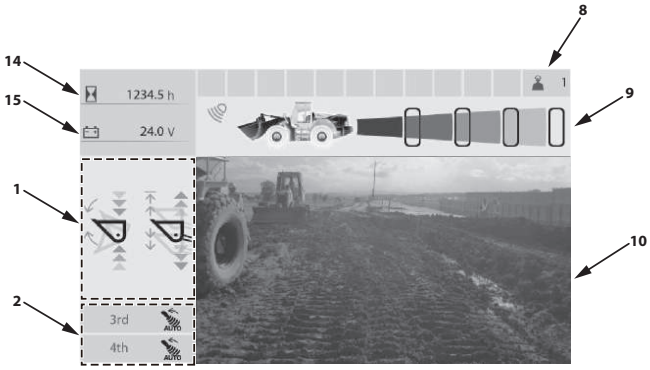

MNTL-01-234-5 ja

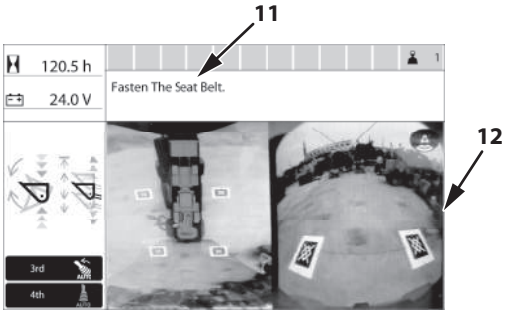

MNTK-01-308PLEN-1 ja

Sub Monitor Basic Screen Displayed Items

- Advice Messages (1)
  Any applicable instructions, suggestions and warning messages are displayed in this area to assist in operator actions.

  NOTE

  Whenever an alarm is detected, pressing the Home switch displays the alarm message.
  Stop the machine, put its forward/reverse lever and forward/reverse switch in NEUTRAL (N). Press Home switch (3) to display the Alarm List menu. Read the content of the alarm and take appropriate steps.
  (For details on the alarm list, refer to "Alarm List" on page (1-77).)

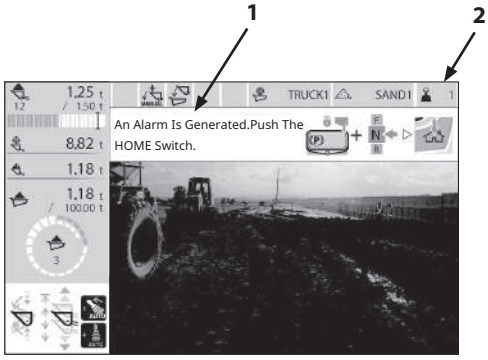

MNTL-MT-007-1 en_GB

If rear obstacle detection sensors detect an obstacle, the advice message display area switches to the rear obstacle detection sensor display.

NOTE

The rear obstacle detection sensor screen is always displayed when traveling in reverse. Alarm messages are not displayed even when an alarm is detected.

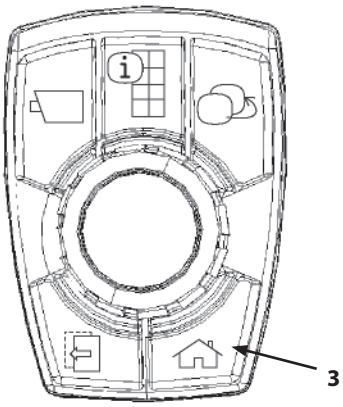

MNUD-01-252-6 ja

- Operator No. (2)
  The number of the currently selected operator is displayed here and the settings saved for that number are applied. For information on selecting the operator number, refer to "Operator Selection Screen" on page (1-81).

- Lift Arm, Bucket Kick Out Status
  Its icon lights when the lift arm, bucket kick out setting is enabled.
  - Lift Arm Height Kick Out 1 Icon (1)
  - Lift Arm Height Kick Out 2 Icon (2)
  - Lift Arm Lower Kick Out 1 Icon (3)
  - Lift Arm Lower Kick Out 2 Icon (4)

  NOTE

  For how to set lift arm kick out, refer to "Lift Arm Height Kick Out ON/OFF, Stop Position Height Settings" on page (1-87) or "Lift Arm Lower Kick Out ON/OFF, Stop Position Height Settings" on page (1-89).

  - Bucket Kick Out 1 Icon (Tilt Back) (5)
  - Bucket Kick Out 2 Icon (Dump) (6)

  NOTE

  For how to set bucket kick out, refer to "Bucket Kick Out ON/OFF, Stop Angle Settings" on page (1-91).

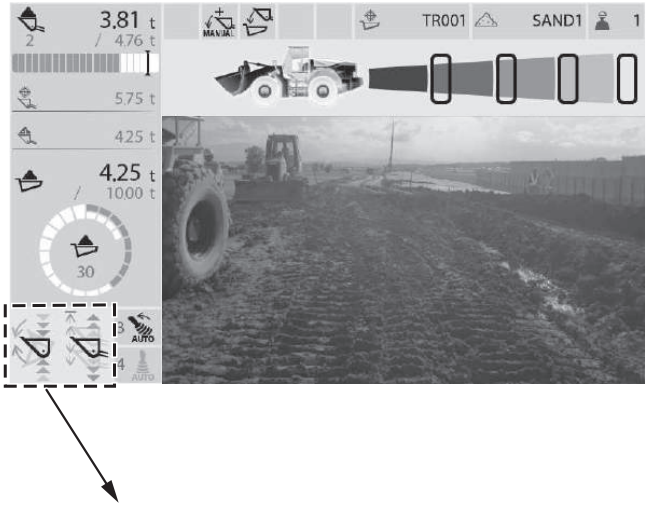

ZW140-7,160-7

MNTL-01-233-4 ja

- Lift Arm, Bucket Detent Status
  Its icons light when the lift arm, bucket detent setting is enabled.
  - Lift Arm Detent (Raise Position) (7)
  - Lift Arm Detent (Lower Position) (8)
  - Bucket Detent (Tilt Back Position) (9)
  - Bucket Detent (Dump Position) (10)

  NOTE

  For details of lever operations, refer to "Multi-Function Joystick Lever" on page (1-160).

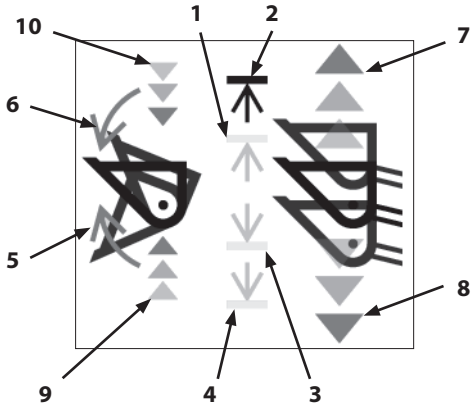

MNUD-01-310-1 ja

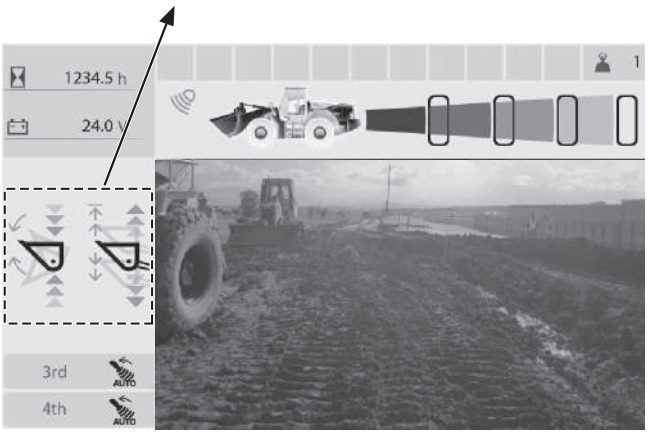

ZW160PL-7

MNTL-01-234-2 ja

- 3rd Lever Detent Status (11) (Optional)
  Detent icon (11) lights when the 3rd lever detent is operated.
- 4th Lever Detent Status (12) (Optional)
  Detent icon (12) lights when the 4th lever detent is operated.

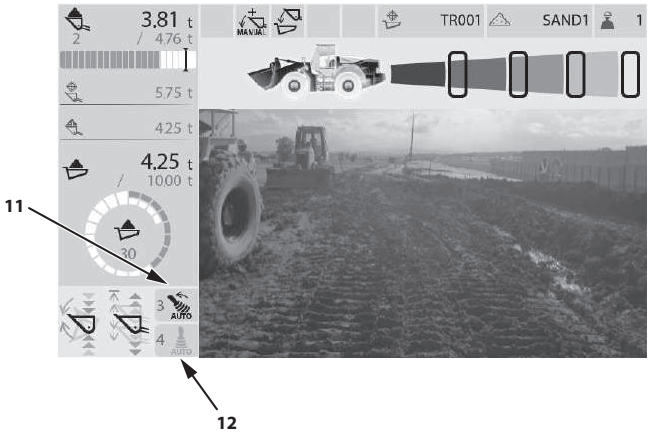

ZW140-7,160-7

MNTL-01-233-20 ja

ZW160PL-7

MNTL-01-234-4 ja

MNUD-01-311 ja

Detent Operation (Lower)

MNUD-01-312 ja

Detent Operation (Raise)

MNUD-01-320 ja

Detent OFF

- Rear Obstacle Detection and Warning (Optional)

  Rear obstacle detection sensor (1) is mounted at the bottom, rear of the vehicle.

  When an obstacle is detected behind the machine, it is indicated by icon (3), which is highlighted in green, and the vehicle speed and distance to the obstacle are indicated by graph 2.

  NOTE

  If there is a problem with the rear obstacle detection system, the highlighting of the icon turns red.

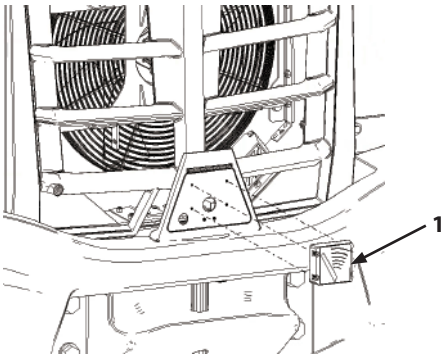

MNTL-01-052-1 ja

The alarm buzzer can be configured on the sub monitor menu. For how to make the settings, refer to “Rear Obstacle Alarm Settings ON/OFF (Optional)” on page (1-108).
The buzzer behaves as follows according to its settings, vehicle speed and the distance to the obstacle.
When the buzzer is set to OFF, icon (4) is displayed.

There are 2 types of obstacle detection system screen displays and buzzer patterns. The operator should determine the appearance of the standard screen.

A Type

Alarm Level	Graph Bar level	Buzzer Setting	
		ON	OFF
1	A, Yellow	No sound	No sound
2	B, Yellow	Small short beep	No sound
3	B, Yellow	Large long beep	Large long beep
4	C, Red	Large long beep	Large long beep

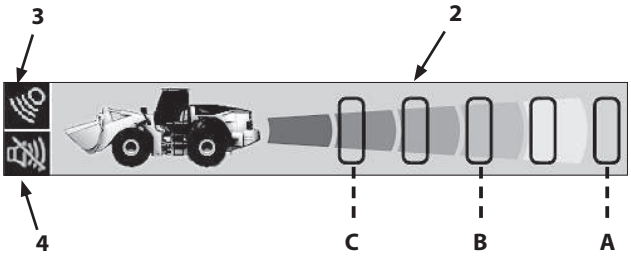

A Type

MNUD-01-314-1 ja

B Type

Alarm Level	Graph Bar level	Buzzer Setting	
		ON	OFF
1	A, Yellow	No sound	No sound
2	B, Yellow	Slow short beep	No sound
3	C, Red	Quick short beep	Quick short beep
4	D, Red	Long beep	Long beep

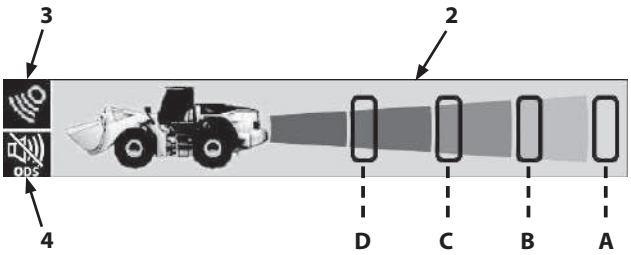

B Type

MNTL-01-242-1 ja

- Rear View Camera Image

  Rear view camera (1) is installed at the top of the rear grille. It provides an image from under the counterweight for a specific distance behind the vehicle.

  The rear view camera image is displayed on the sub monitor. The image can be switched between standard size (2) and full-screen (3) via rear view camera switch (4) on the right console. For details on switching the size of camera images, refer to “Rear View Camera Display Modes” on page (1-64).

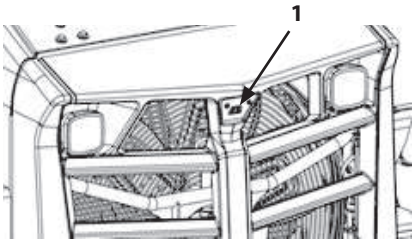

MNTK-01-009-1 ja

MNTL-01-233-5 ja

MNUD-01-284-1 ja

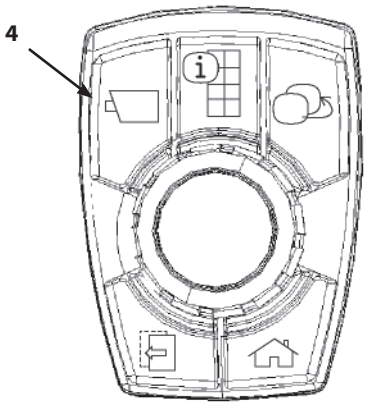

MNUD-01-252-7 ja

- Aerial Angle Images (Optional)

  Right side camera (1) and left side camera (2) are mounted at the top of the cab and images from them are combined to form a composite image of the area around the vehicle.

  By displaying a composite image from side cameras (1) and (2) of the surroundings (3) and a rear view (4) from the rear view camera on the sub monitor, the aerial angle function helps the operator check the surroundings for obstacles.

  NOTE

  For details on the rear view camera display, refer to the previous page.

  The images can be displayed in 2 ways, as a composite image of the side and rear view cameras (3) and as a rear view camera image only (4). The operator can switch between these patterns with selector knob (5) on the right console. For details on the aerial angle function and how to operate it, refer to “Aerial Angle Function (Optional)” on page (1-214).

WARNING

- **Images are displayed to help the operator check the area for obstacles around the machine.**
- **People and objects depicted on the monitor may appear differently from their actual position and/or distances. Some areas, particularly near and under the machine, cannot be depicted by the cameras. Always check the area around the machine thoroughly before moving it.**

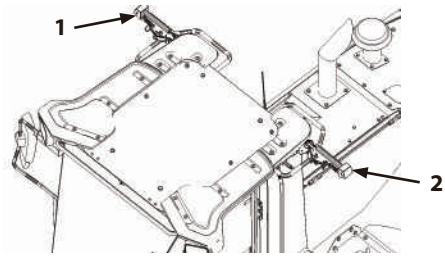

MNTL-01-053-1 ja

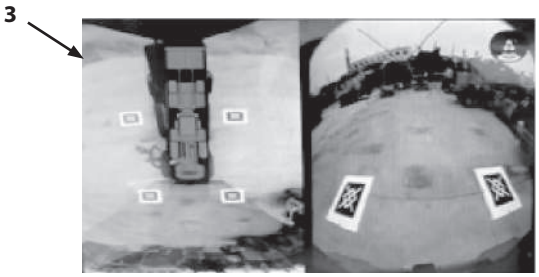

MNUD-01-319-1 ja

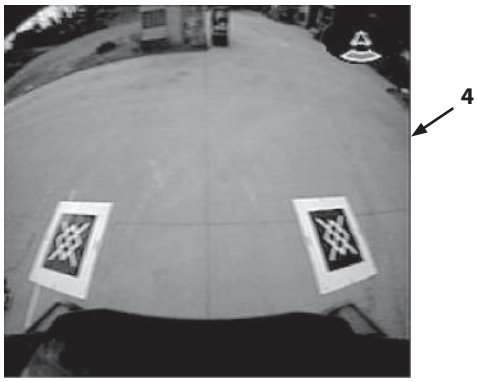

MNUD-01-317-1 ja

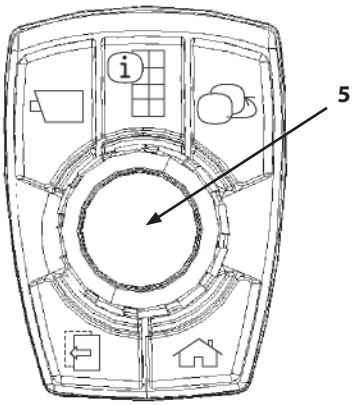

MNUD-01-252-8 ja

- Payload Checker

  Payload data is displayed in real time on the sub monitor.

  1. Payload Data (Current Value)
     Payload data can be displayed in 4 patterns in real time.
  2. Add Mode Icon
     The icon changes according to the selected Add Load counting mode.(Auto/Manual Counting)
  3. Tip-Off Mode Icon
     The icon changes according to the selected tip-off function mode and whether it is ON/OFF. (Tip-off to truck, to pile, or OFF)
  4. Target Load
     Shows the name of the selected target load.
  5. Target Material
     Shows the selected target material being handled.

  For details about the payload checker, refer “Payload Checker” on page (5-21).

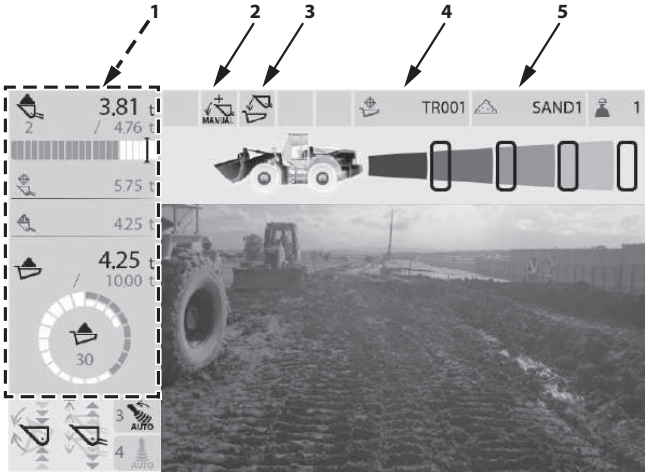

MNTL-01-233-6 ja

Displaying Sub Monitor Main Menu

IMPORTANT

When on the main menu, shifting the Forward/ Reverse lever to F or R shifts the display back to the basic screen.

1. Pressing backward switch (2) while the operator setting screen is displayed after the starting screen opens sub monitor main menu (1).
   Pressing selector knob (3) while the basic screen is displayed also opens sub monitor main menu (1).
2. Turn selector knob (3) to select an item, and then press it to set the selection.
3. Selector knob (3) can also be turned to scroll through the screens.

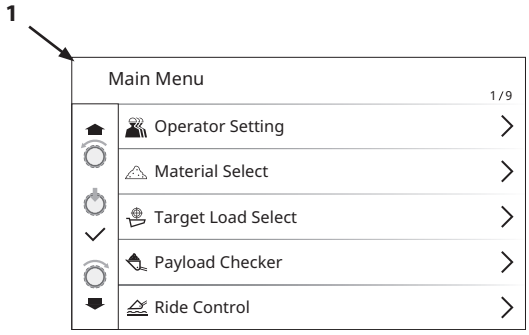

MNUD-01-263-1 en_GB

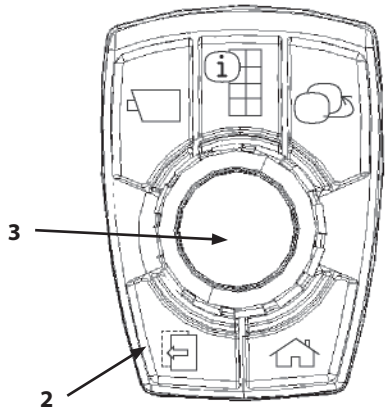

MNUD-01-252-9 ja

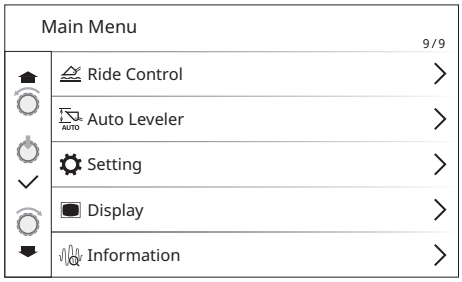

MNUD-01-264 en_GB

Sub Monitor Menu Configuration

The sub monitor menu consists of the following screens.
The main menu consists of 10 functions with 22 items.

NOTE

The alarm list only appears on the main menu when there is an active alarm.*
*The menu with ** mark are applicable to ZW140-7, 160-7 only.*

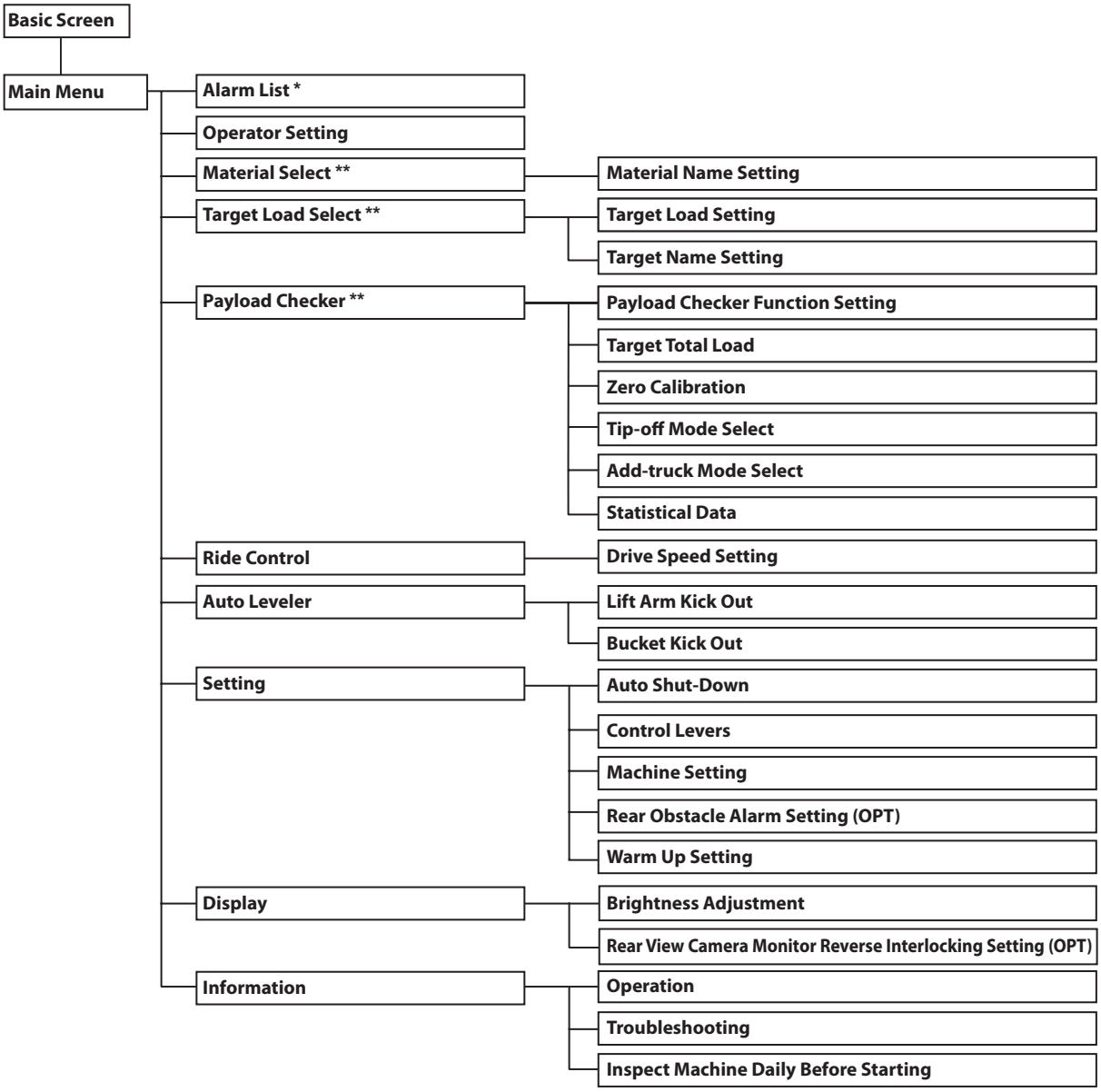

MNTL-01-235 en_GB

Alarm List

Fault codes are listed in order of occurrence. Follow the procedure below to display detailed information for an alarm.

1. Press selector knob (1) on the basic screen to open the main menu of the sub monitor.

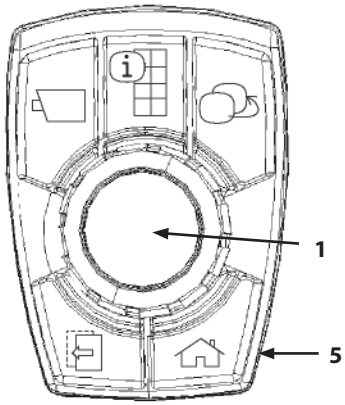

MNUD-01-252-10 ja

2. Turn selector knob (1) to highlight "Alarm List" (2) and then press the selector knob.

   NOTE

   "Alarm list" (2) only appears on the main menu when there is an active alarm.

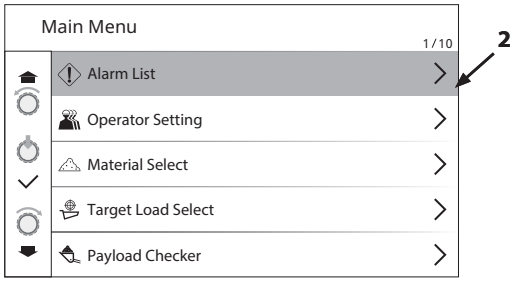

MNUD-01-262-1 en_GB

3. Highlight "Warning Alarm" (3) and press selector knob (1). Details (4) on the selected alarm are displayed.

   NOTE

   - *The alarm list is only displayed if there are active alarms.*
   - *If an alarm is lit on the monitor panel, details on the alarm should also be displayed in the alarm list.*

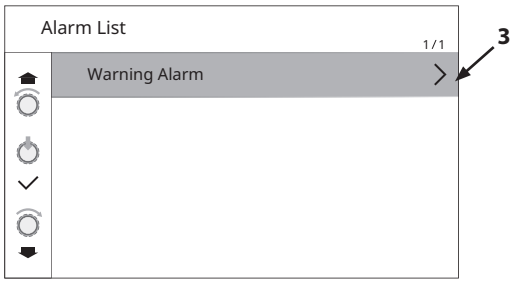

MNUD-01-265-1 en_GB

4. Press home switch (5) to close the alarm list and return to the basic screen.

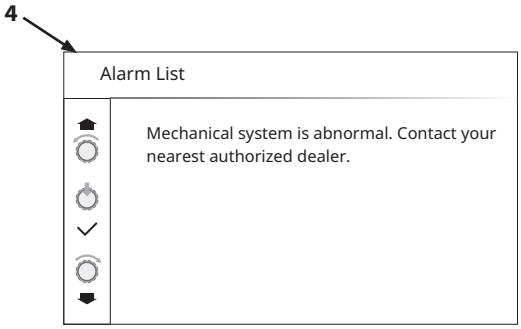

MNUD-01-266-1 en_GB

Remedy

Alarm	Alarm Contents and Suggested Action
Warning Alarm	Mechanical system is abnormal. Contact Authorized Dealer.
Engine Trouble Alarm	Engine or engine related parts are abnormal. Immediately set the machine in a safe position, stop the engine and contact Authorized Dealer.
Engine Warning Alarm	Engine or engine related parts are abnormal. Contact Authorized Dealer.
Aftertreatment Device Abnormal Alarm	Aftertreatment device is abnormal. Immediately set the machine in a safe position, stop the engine and contact Authorized Dealer.
Aftertreatment Device Regeneration Request	Aftertreatment Device Regeneration Is Needed. Set The Machine In A Regeneration Condition, Turn The Regeneration Switch To The Manual Regeneration Position.
Aftertreatment Device Regeneration Inhibit Alarm	As regeneration is inhibited, can not execute regeneration. Move the machine to a safe place, release the regeneration inhibition. For more information, refer to the operation manual.
Hydraulic Oil Overheat Alarm	Hydraulic oil temperature is abnormally increasing. Stop operation. Run the engine at slow idle speed to lower the hydraulic oil temperature.
Alternator Alarm	The generated voltage of the alternator is decreasing. Check the belt driving the alternator and adjust it if necessary by following the operation manual. If the alarm does not disappear, contact Authorized Dealer.
Overheat Alarm	Coolant temperature is abnormally increasing. Stop operation. Run the engine at slow idle speed to lower the coolant temperature.
Air Cleaner Restriction Alarm	Air cleaner is clogged. Clean or replace the air cleaner element by following the operation manual.
Camera System Abnormal Alarm	Camera system is abnormal. Contact Authorized Dealer.

Remedy (Continued)

Alarm	Alarm Contents and Suggested Action
Preheating Operation Status	The glow plug is in operation.
Seat Belt Unfasten Alarm	Be sure to fasten the seat belt when operating the machine.
DEF Low Level Alarm	DEF level is low. Refill DEF by following the operation manual.
Engine Output Restriction Alarm	Engine output is limited.
Engine Output Reduction Alarm	Engine Output And Speed Are Restricted.
Urea SCR System Abnormal Alarm	Aftertreatment device is broken. Contact Authorized Dealer.
Escape Mode Alarm	DEF level is low or engine output restriction is temporally suspended due to abnormality of the aftertreatment device. Immediately refill DEF or repair the aftertreatment device. If the system is abnormal, contact Authorized Dealer.
System Restart Request	Since continuous operation exceeded 23 hours, it is necessary to restart the system. Stop the engine once, make sure that the monitor display has disappeared, then restart the engine.
Steering Oil Pressure Alarm	Steering Oil Pressure Is Low. Immediately Stop Machine Operation And Check The Steering System.
Axle Oil Temperature Alarm	Axle Oil Temperature Is Abnormally High. Check If The Service Brake Is Dag-gled. If The Brake Pedal Is Continuously Stepped On, An Increase Of The Axle Oil Temperature May Result.
Brake Oil Pressure Alarm	Brake Oil Pressure Is Low. Immediately Stop Machine Operation And Check The Brake System.
Transmission Oil Overheat Alarm	Transmission Oil Temperature Is Abnormally High.Stop Machine Operation. Run The Engine At Slow Idle Speed To Lower The Oil Temperature.
Transmission Warning Alarm	Transmission Or accessory Is Abnormal. Safely Park The Machine And Stop The Engine Immediately. Contact Authorized Dealer.
Hydraulic Oil Level Alarm	Hydraulic Oil Level Is Low. Immediately Stop Machine Operation And Check Hydraulic Oil Level And Leaks Of Piping.
Emergency Steering Alarm (Machine Equipped with Emergency Steering System)	Emergency Steering Oil Pressure Comes Short Of The Specified Pressure. Check Emergency Steering System.
System Failure Alarm	Machine Network System Is Abnormal. Contact Authorized Dealer.
Engine Oil Pressure Alarm	Engine oil pressure is decreased. Immediately set the machine in a safe position and stop the engine. Check the engine oil level by following the operation manual. If the alarm does not disappear even if engine oil is refilled, contact Author-ized Dealer.
Coolant Level Check (Abnormal)	Check coolant level and add coolant if necessary by following the operation manual.
Object Detection System Abnormal Alarm	Object detection system is abnormal. Contact Authorized Dealer.
Control Levers Lock System Alarm	Control levers lock system is abnormal. Contact Authorized Dealer.
Lift Arm Lever System Alarm	Lift arm lever system is abnormal. Contact Authorized Dealer.

Alarm	Alarm Contents and Suggested Action
Bucket Lever System Alarm	Bucket lever system is abnormal. Contact Authorized Dealer.
3rd Lever System Alarm	3rd lever system is abnormal. Contact Authorized Dealer.
4th Lever System Alarm	4th lever system is abnormal. Contact Authorized Dealer.
Forward/Reverse Operation Disabled Alarm	Forward/Reverse Operation Or accessory Is Abnormal. Safely Park The Machine And Stop The Engine Immediately. Contact Authorized Dealer.

Operator Settings Screen

Up to 11 different patterns of settings made via the sub monitor and the switch panel can be saved for Operators specified as numbers 0 to 10.
The saved settings are applied by selecting an operator number.

NOTE

This screen is displayed immediately after the starting screen. For details, refer to "Displaying the Sub Monitor Basic Screen" on page (1-65).

1. Press selector knob (1) on the basic screen to open the main menu of the sub monitor.
2. Turn selector knob (1) to highlight Operator Setting (2) and then press the selector knob.
3. Turn selector knob (1) to select an operator number.
4. Press selector knob (1) to turn on the check box of the selected operator number; the settings, which are listed on the next page, saved for the selected operator number are applied to the machine.

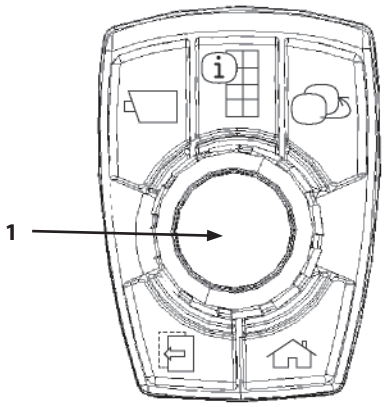

MNUD-01-252-11 ja

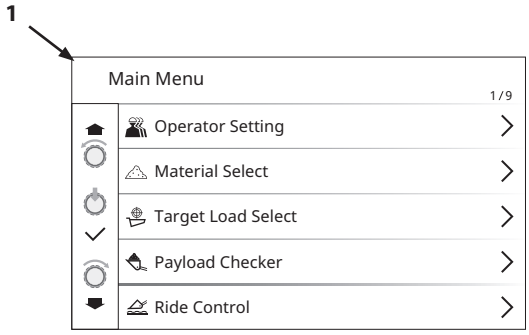

MNUD-01-263-1 en_GB

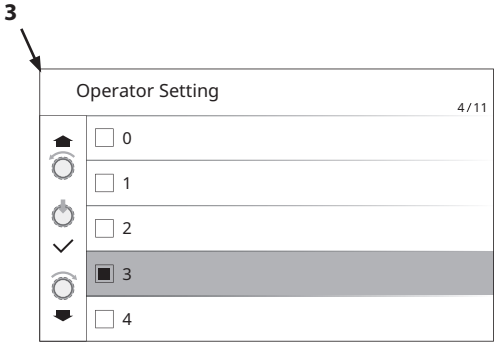

MNUD-01-254-2 en_GB

<Sub Monitor Settings>

- Ride Control Speed
- Lift Arm Height Kick Out 1 and 2
- Lift Arm Lower Kick Out 1 and 2
- Bucket Kick Out 1 and 2
- Auto Shut-Down Time
- Lift Arm Lever Characteristic Mode
- Bucket Lever Characteristic Mode
- 3rd/4th Lever Characteristic Mode
- Cylinder End Soft Stop
- 3rd/4th Lever Detent
- Rear Obstacle Alarm Settings
- Tip-Off Mode (Payload Checker)
- Auto Add Mode (Payload Checker)

<Switch Panel Settings>

- Ride Control ON/OFF
- Power Mode ON/OFF
- Auto Shut-Down ON/OFF
- Fan Reverse Rotation ON/OFF
- Approach Speed Control
- Traction Control
- Deceleration Mode

Changing Operator Settings

IMPORTANT

- **The operator settings before changing the operator number, or when the key is turned OFF, are stored.**
- **As the operator number settings when the key is turned OFF are stored, it is not necessary to select an operator number if it is the same as before.**

Example of operating the approach speed control switch:

1. Select operator no. 1 from the operator settings menu.
2. If Fast is selected for the approach speed, use switch (2) on switch panel (1) to select Middle. (For how to switch approach speeds, refer to "Approach Speed Control Switch" on page (1-132).)
3. Turn the key switch OFF momentarily and then back ON. The machine starts up automatically with operator 1 selected.
   Although the approach speed has changed to Middle, all other settings remain the same.
4. Next, change the approach speed from Middle to Slow.
5. Select operator no. 2 from the operator settings menu. The selected approach speed is Fast.
6. Change the approach speed to Slow.
7. Select operator no. 1 from the operator settings menu. The travel mode changed to Slow in step 4 is saved.

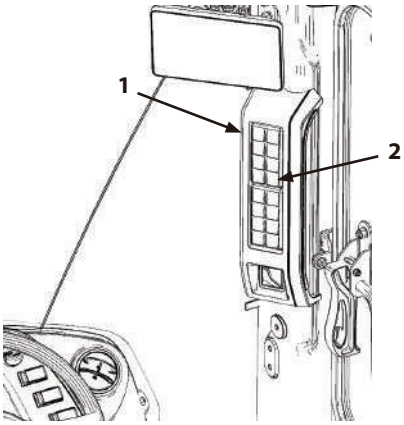

MNTL-01-039-9 ja

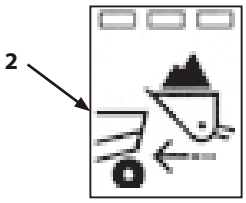

MNUD-01-210-2 ja

	Pilot Lamp			
	■ ■ ■	□ ■ ■	□ □ ■	□ □ □
Function	OFF	Fast	Middle	Slow

□: LED ON

■: LED OFF

Select Material (ZW140-7, 160-7 only)

This changes the material to be handled.

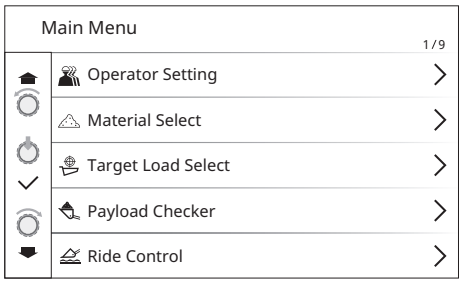

MNUD-01-263 en_GB

Select Target Load (ZW140-7, 160-7 only)

This changes the target load.

Payload Checker (ZW140-7, 160-7 only)

This is for making settings related to the payload checker function and managing payload data.
For details about the payload checker, refer “Payload Checker” on page (5-21).

Ride Control Drive Speed Settings

This sets the speed at which the ride control functions.

IMPORTANT

To enable this function, set the ride control setting to AUTO with ride control switch (2) on the switch panel. When AUTO is selected, only the LED in the center lights.
For details on operating ride control switch (2), refer to "Ride Control Switch" on page (1-136).

1. Press selector knob (1) on the basic screen to open the main menu of the sub monitor.
2. Turn selector knob (1) to highlight Ride Control (3) and then press the selector knob.
3. The ride control speed settings screen opens. The current speed setting (4) is highlighted in blue.
4. Turning selector knob (1) changes the highlighting to orange.
5. Turn selector knob (1) to the right to increase the speed setting 1 km/h at a time. Turn selector knob (1) to the left to decrease the speed setting 1 km/h at a time.

   NOTE

   The default setting is 6 km/h.
   The speed setting can be changed within the range of 3 to 10 km/h.

6. Pressing selector knob (1) when the desired speed is displayed completes the ride control speed setting and changes the highlighting back to blue.

IMPORTANT

The ride control setting is adjusted automatically to suit machine conditions, so it does not function when driving forward and in a digging attitude.

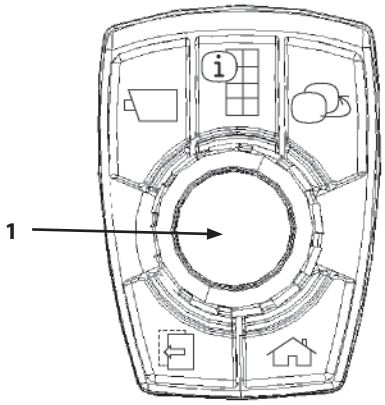

MNUD-01-252-11 ja

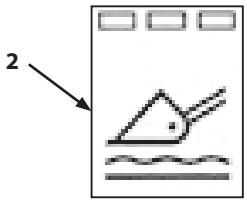

MNUD-01-214-2 ja

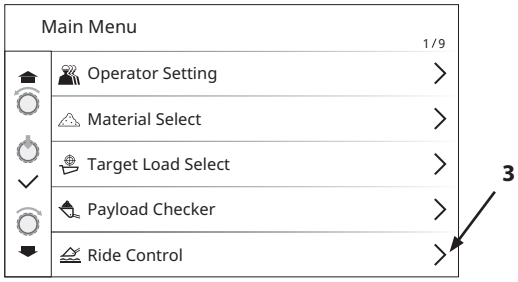

MNUD-01-263-2 en_GB

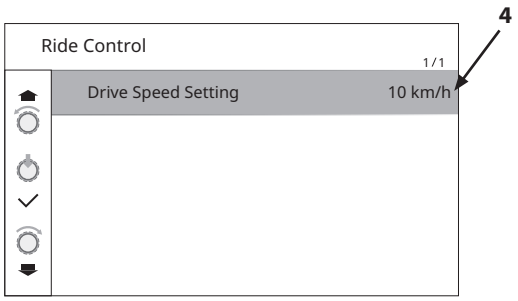

MNUD-01-268-1 en_GB

Auto Leveler Settings

This sets the heights (lift arm kick out position) at which the lift arm stops automatically when it is raised and lowered. It also sets the angles (bucket kick out position) at which the bucket stops automatically when it is tilted back and dumped.

1. Press selector knob (1) on the basic screen to open the main menu of the sub monitor.
2. Turn selector knob (1) to highlight "Auto Leveler" (2) and then press the selector knob.
3. Turn selector knob (1) to highlight Lift Arm Kick Out or Bucket Kick Out and then press the selector knob.

NOTE

The kick out positions at which they are activated are indicated by icons on the sub monitor. The icons do not light when not activated. (For details on icon display when enabled, refer to "Items Displayed on the Sub Monitor Basic Screen" on page (1-68).)

- Lift Arm Height Kick Out 1 Icon (H1)
- Lift Arm Height Kick Out 2 Icon (H2)
- Lift Arm Lower Kick Out 1 Icon (L1)
- Lift Arm Lower Kick Out 2 Icon (L2)
- Bucket Kick Out 1 Icon (Tilt Back) (B1)
- Bucket Kick Out 2 Icon (Dump) (B2)
- Lift Arm Detent (Lower Position) (Float) (F1)

NOTE

For how to set lift arm kick out, refer to "Lift Arm Height Kick Out ON/OFF, Stop Position Height Settings" on page (1-87) or "Lift Arm Lower Kick Out ON/OFF, Stop Position Height Settings" on page (1-89).

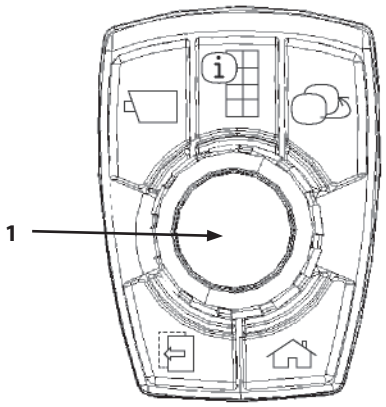

MNUD-01-252-11 ja

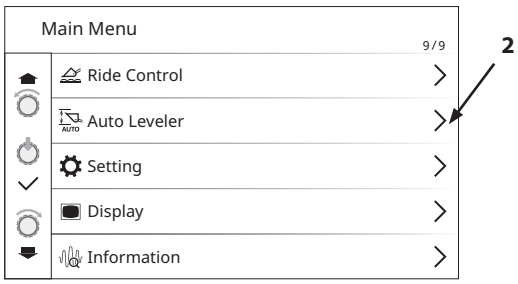

MNUD-01-264-1 en_GB

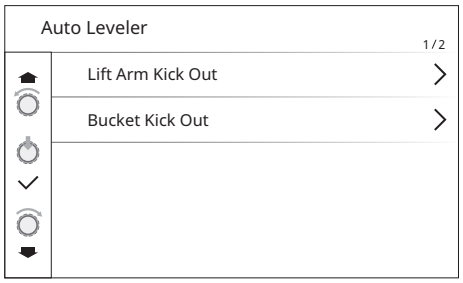

MNUD-01-270 en_GB

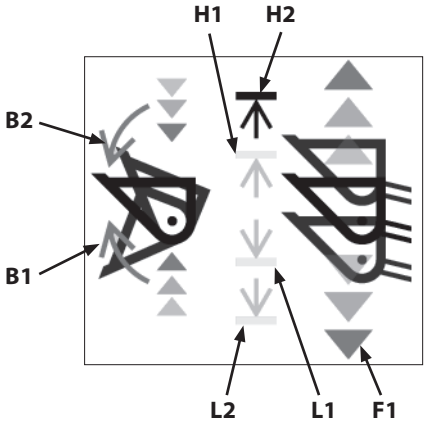

MNUD-01-310-2 ja

Lift Arm Height Kick Out ON/OFF, Stop Height Settings

This sets the height at which the lift arm stops automatically when it is raised. Two stop positions can be set.

1. Turn the selector knob to select Lift Arm Kick Out (1) and then press the selector knob.

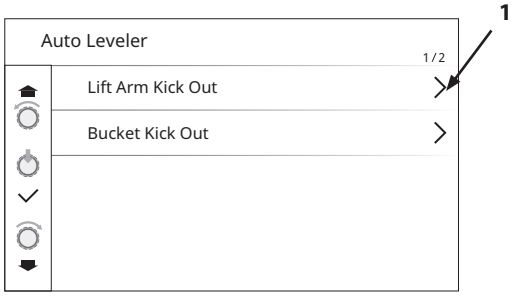

MNUD-01-270-1 en_GB

2. Turn the selector knob to select "Lift Arm Height Kick Out" (2) and then press the selector knob.

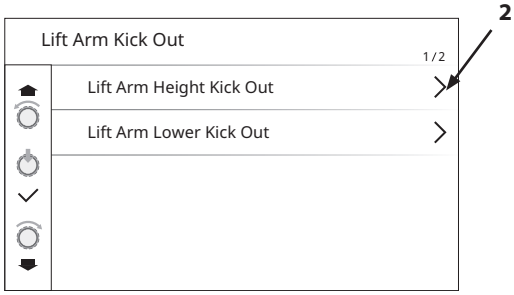

MNUD-01-271-1 en_GB

3. Turn the selector knob to select a "Lift Arm Height Kick Out 1" (3) and then press the selector knob.
   Lift arm height kick out 1 setting screen (4) opens.
   If the kick out is ON (enabled), the lift arm stop height can be set.

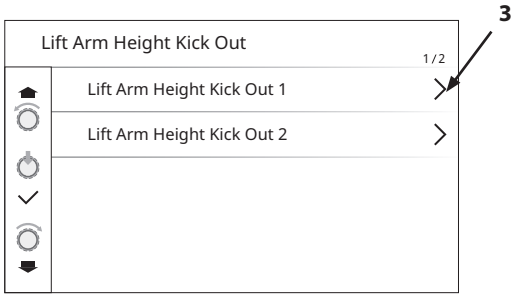

MNUD-01-272-1 en_GB

<Turning it ON/OFF>

4. Turn the selector knob to highlight ON/OFF box (5). If the bar is lit green and the round button is on the right side, it is ON (enabled). The setting for lift arm height kick out 1 is enabled and icon (H1) is displayed on the sub monitor.

ON Position

MNTL-01-013 ja

5. Press the selector knob to turn it OFF (disabled).

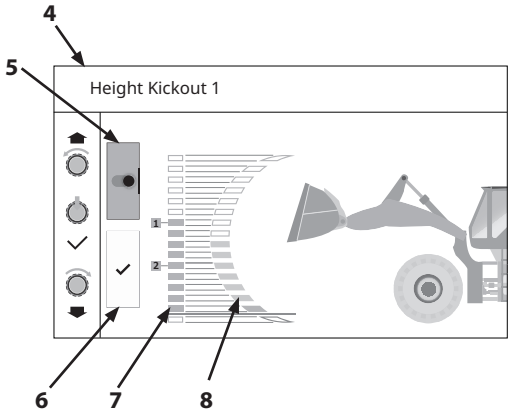

MNUD-01-273-1 en_GB

<Height Setting>

6. Segment (7) indicates the current setting of the height kick out. (Position [1])
   Segment (8) indicates the current height of the lift arm.
   Operating the control lever and thus changing the height of the lift arm causes the display of segment (8) to change with the height. The lift arm height can be set within the orange segment range.
7. Turn the selector knob to highlight symbol ✔ (6) and then press the selector knob.
8. Height kick out 1 is set to the current height of the lift arm. When the kick out setting is changed, the display of segment (7) changes in line with the height.
9. Lift arm height kick out 2 can be set in the same way to a different height.
   Highlight lift arm height kick out 2 and perform steps 3 to 8 above.

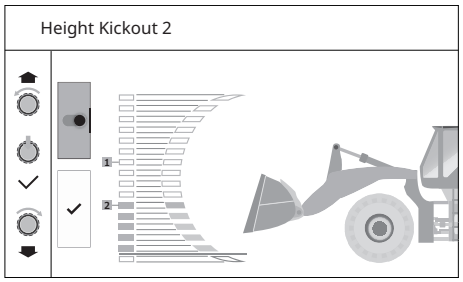

MNUD-01-274 en_GB

Lift Arm Lower Kick Out ON/OFF, Stop Height Settings

This sets the height at which the lift arm stops automatically when it is lowered. Two stop positions can be set.

1. Turn the selector knob to select "Lift Arm Kick Out" (1) and then press the selector knob.

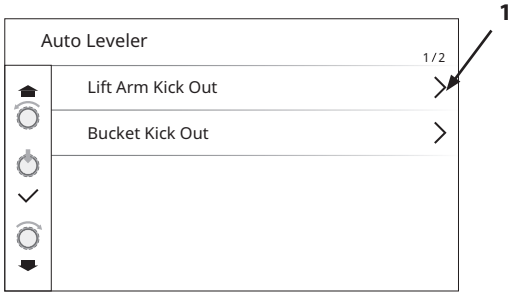

MNUD-01-270-1 en_GB

2. Turn the selector knob to highlight "Lift Arm Lower Kick Out" (2) and then press the selector knob.

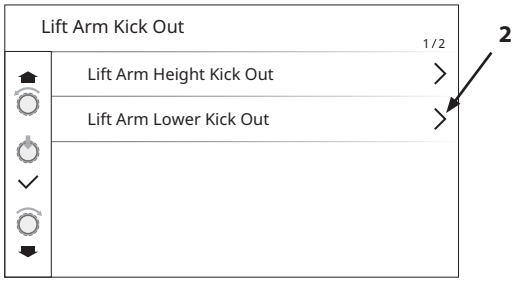

MNUD-01-271-2 en_GB

3. Turn the selector knob to highlight "Lift Arm Lower Kick Out 1" (3) and then press the selector knob.
   Lift arm lower kick out 1 setting screen (4) opens.
   If the kick out is ON (enabled), the lift arm stop height can be set.

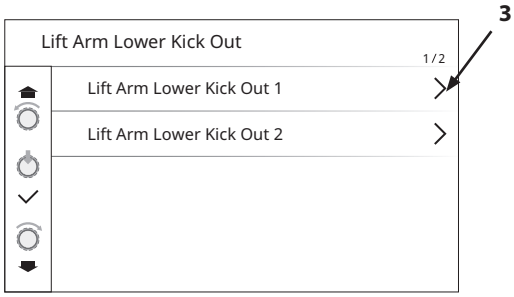

MNUD-01-275-1 en_GB

<Turning it ON/OFF>

4. Turn the selector knob to highlight ON/OFF box (5). If the bar is lit green and the round button is on the right side, it is ON (enabled). The setting for lift arm lower kick out 1 is enabled and icon (L1) is displayed on the sub monitor.

ON Position

MNTL-01-013 ja

5. Press the selector knob to turn it OFF (disabled).

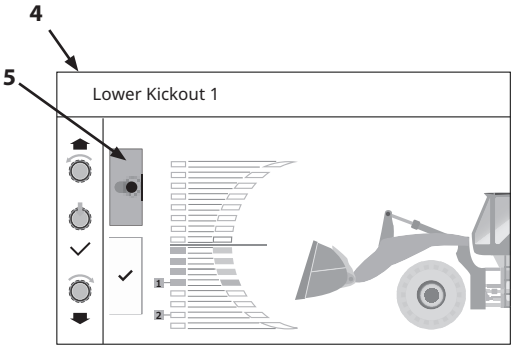

MNUD-01-276-1 en_GB

<Height Setting>

6. Segment (7) indicates the current setting of the lower kick out. (Position [1])
   Segment (8) indicates the current height of the lift arm.
   Operating the control lever and thus changing the height of the lift arm causes the display of segment (8) to change with the height. The lift arm height can be set within the orange segment range.
7. Turn the selector knob to highlight the box of symbol ✔ (6) and then press the selector knob.
8. Lower kick out 1 is set to the current height of the lift arm. When the kick out setting is changed, the display of segment (7) changes in line with the height.

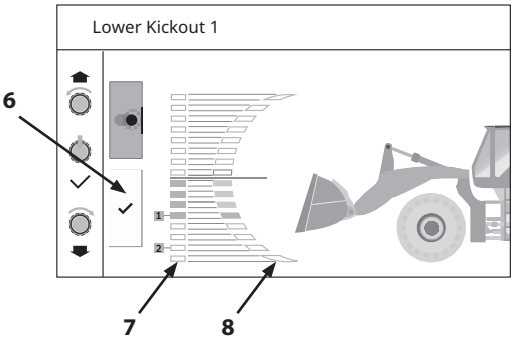

MNUD-01-276-2 en_GB

9. Lift arm lower kick out 2 can be set in the same way to a different height.
   Highlight lift arm lower kick out 2 and perform steps 3 to 8 above.

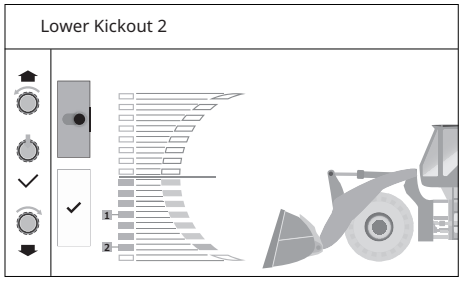

MNUD-01-277 en_GB

Bucket Kick Out ON/OFF, Stop Angle Settings

This sets the angle at which the bucket stops automatically when operated.

1. Turn the selector knob to select "Bucket Kick Out" (1) and then press the selector knob.

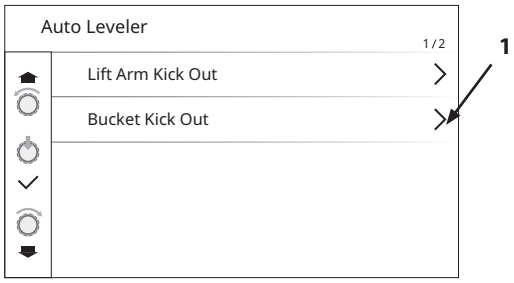

MNUD-01-270-2 en_GB

<Turning it ON/OFF>

2. Turn the selector knob to select "Bucket Kick Out Operation Position Select" (2) and then press the selector knob.
   The bucket kick out operation position select screen opens.

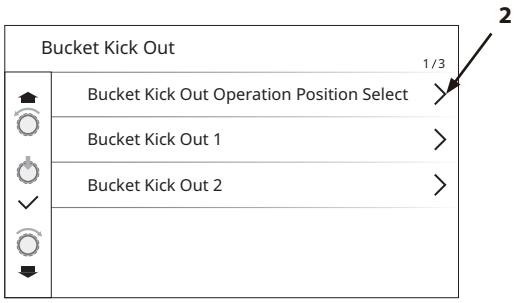

MNUD-01-250-1 en_GB

3. Turn the selector knob to highlight Bucket Kick Out 1 and/or Bucket Kick Out 2 and then press the selector knob.
   The check box of the selected item lights up green.

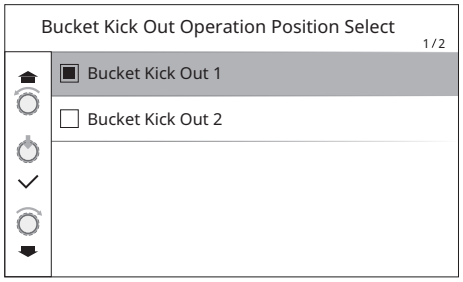

MNUD-01-278 en_GB

<Angle Settings>

4. Turn the selector knob to select "Bucket Kick Out 1" (3) and then press the selector knob.
   Bucket Kick Out 1 setting screen (4) opens.
5. Blue segment (5) indicates the current setting.
   Orange segment (6) indicates the current bucket angle.
   Operate the control lever to change the bucket angle.
   The bucket angle can be set within the orange segment range.
6. Turn the selector knob to highlight symbol ✔ (7) and then press the selector knob.
7. Bucket kick out 1 is set to the current bucket angle.
   When the kick out setting is changed, the display of segment (5) changes in line with the angle.

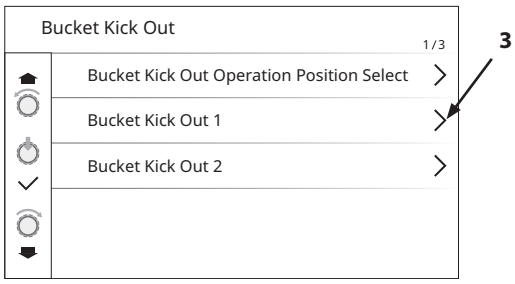

MNUD-01-250-2 en_GB

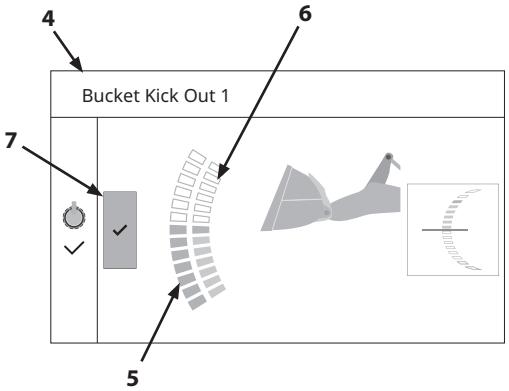

MNUD-01-280-1 en_GB

8. Bucket kick out 2 can be set in the same way to a different angle.
   Highlight bucket kick out 2 and perform steps 5 to 7 above.

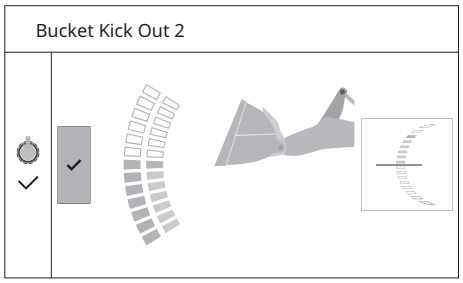

MNUD-01-281 en_GB

Settings Menu

Auto Shut-Down Time Setting

This sets the time to activation of auto shut-down.

IMPORTANT

To enable this function, set the auto shut-down setting to ON with auto shut-down switch (2) on the switch panel. When ON is selected, only the LED in the center lights.
For how to operate auto shut-down switch (2), refer to “Auto Shut-Down ON/OFF (Optional)” on page (1-125).

1. Press selector knob (1) on the basic screen to open the main menu of the sub monitor.
2. Turn selector knob (1) to highlight "Setting" (3) and then press the selector knob.
3. Turn selector knob (1) to highlight "auto shut-down" (4) and then press the selector knob.

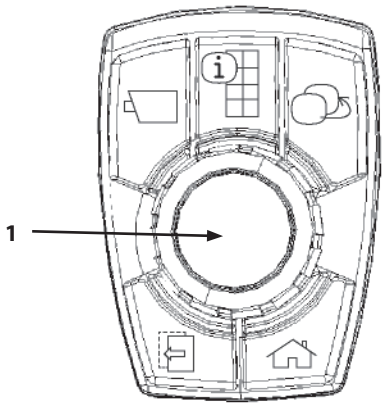

MNUD-01-252-11 ja

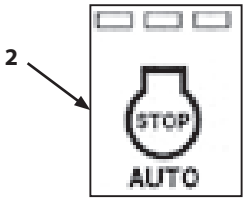

MNUD-01-204-2 ja

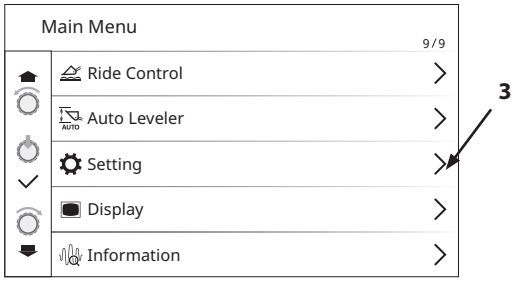

MNUD-01-264-3 en_GB

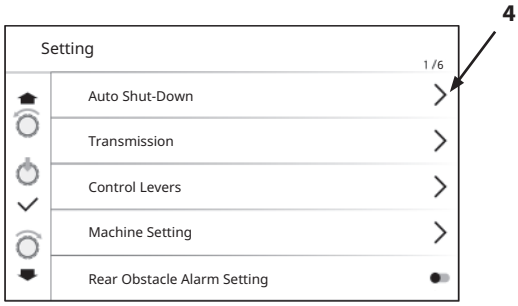

MNTL-MT-008-1 en_GB

4. When the Auto Shut-Down setting screen opens, the current time setting (5) will be highlighted in blue. Turning selector knob (1) changes the highlighting to orange.
5. Turn selector knob (1) right or left to highlight the desired time.
   The times (minutes) that can be set are displayed in the following order.
   1→2→3→4→5→7→10→15→20→25→30→1
6. Pressing selector knob (1) when the desired time is displayed completes the auto shut-down setting and changes the highlighting back to blue.

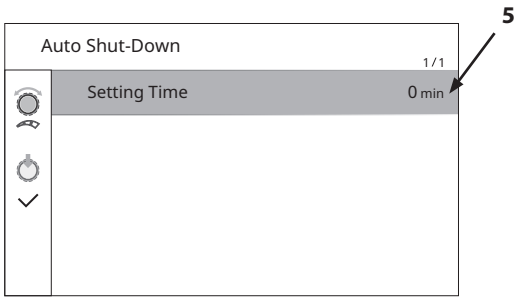

MNUD-01-282-1 en_GB

NOTE

- *Thirty seconds before the engine stops, a message on the monitor and the buzzer sounds to indicate the engine is about to stop. The buzzer sounds again at 15 and 5 seconds prior to the engine stopping.*
  If any operation is made before the engine stops, auto shut-down is disabled and the engine does not stop.
- *If a different operator number is selected while the auto shut-down time is counting down, it resets the timer. The timer starts again from the point the operator number was changed.*

Displaying Control Lever Setting Menus

1. Press selector knob (1) on the basic screen to open the main menu of the sub monitor.

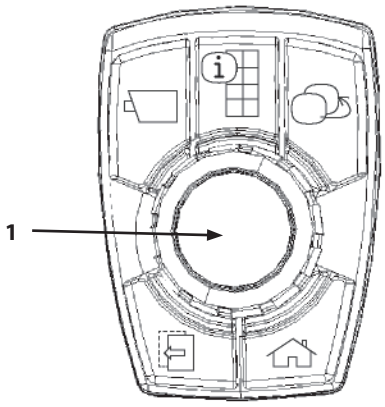

MNUD-01-252-11 ja

2. Turn selector knob (1) to highlight "Setting" (2) and then press the selector knob.

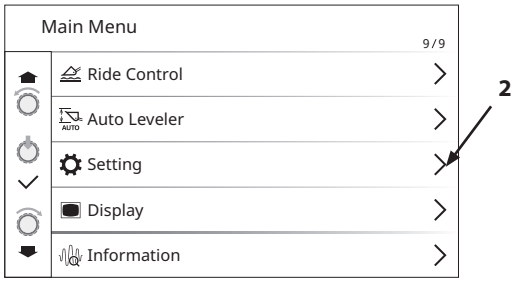

MNUD-01-264-5 en_GB

3. Turn selector knob (1) to highlight "Control Levers" (3) and then press the selector knob.

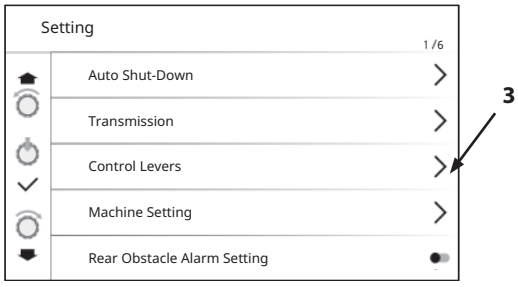

MNTL-MT-008-2 en_GB

4. The Control Levers setting screen (4) opens.
5. Turn selector knob (1) to select an item, and then press it to open its setting screen.

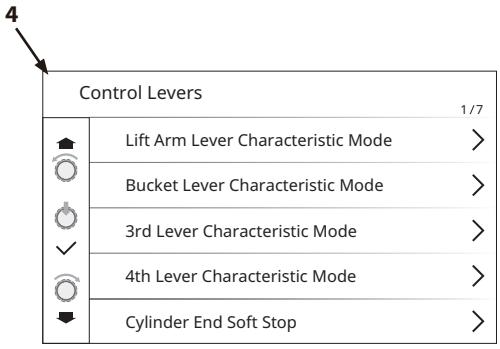

MNTK-01-287-4 en_GB

Lift Arm Lever Characteristic Mode

This is for slowing the movement of loads when raising and lowering the lift arm.

1. From the Control Levers settings screen, highlight "Lift Arm Lever Characteristic Mode" (1) and then press selector knob (2).

   NOTE

   For how to display the Control Levers settings screen, refer to "Displaying the Control Levers Setting Menus" on page (1-95).

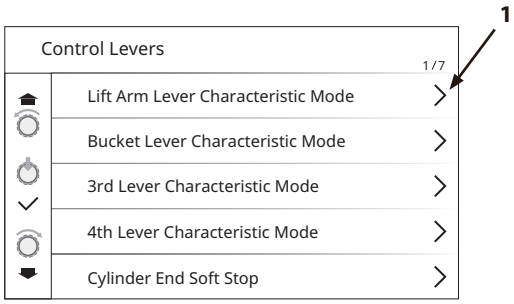

MNTK-01-287-1 en_GB

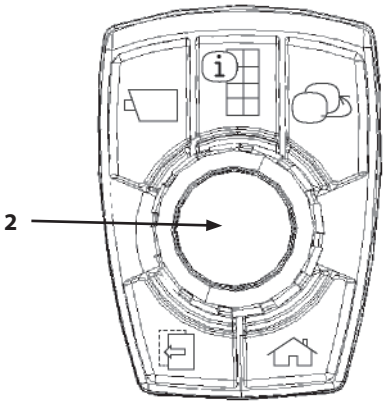

MNUD-01-252-12 ja

2. Lift Arm Lever Characteristic Mode screen (3) opens.
3. Turn selector knob (2) to highlight an operating mode number (2) and then press the selector knob.

Mode	Lift Arm Operating Speed	
	When Raising	When Lowering
0	Standard	Standard
1	Standard	Slow in all ranges
2	Slow to midrange Standard from mid-range	Slow in all ranges

4. The check box of the selected mode number is lit.

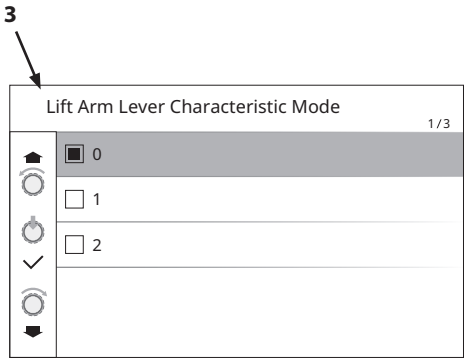

MNUD-01-289-1 en_GB

Bucket Lever Characteristic Mode

This is for slowing the movement of loads when tilting and dumping the bucket.

1. From the Control Levers settings screen, highlight "Bucket Lever Characteristic Mode" (1) and then press selector knob (2).

   NOTE

   For how to display the Control Levers settings screen, refer to "Displaying the Control Levers Setting Menus" on page (1-95).

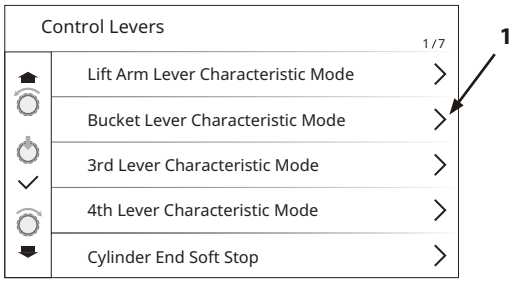

MNTK-01-287-2 en_GB

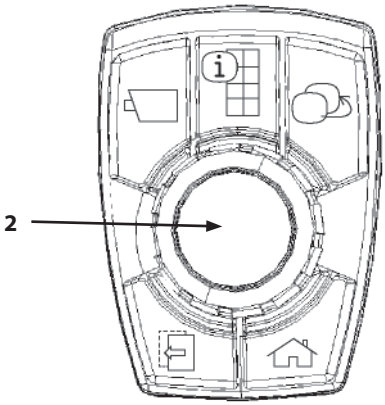

MNUD-01-252-12 ja

2. Bucket Lever Characteristic Mode screen (3) opens.
3. Turn selector knob (2) to highlight an operating mode number (2) and then press the selector knob.

Mode	Bucket Operating Speed	
	When Tilting	When Dumping
0	Standard	Standard
1	Standard	Slow in all ranges
2	Slow to midrange Standard from mid-range	Slow in all ranges

4. The check box of the selected mode number is lit.

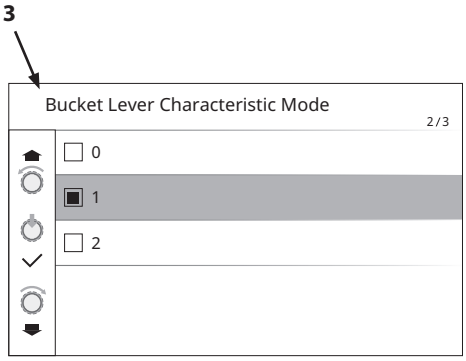

MNUD-01-290-1 en_GB

3rd/4th Lever Characteristic Mode (Optional)

This is to set the slow operation mode for attachment operation using the 3rd and/or 4th control lever.

1. From the Control Levers settings screen, highlight "3rd Lever Characteristic Mode" (1) or "4th Lever Characteristic Mode" (2) and then press selector knob (3).

   NOTE

   For how to display the Control Levers settings screen, refer to "Displaying the Control Levers Setting Menus" on page (1-95).

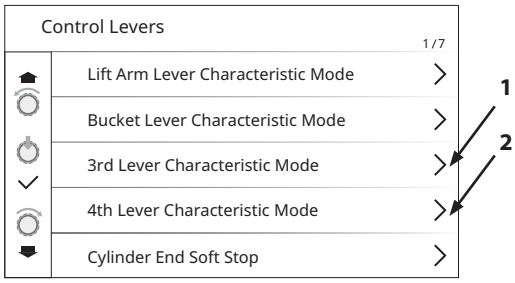

MNTK-01-287-3 en_GB

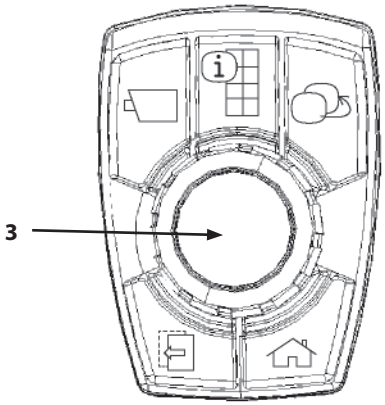

MNUD-01-252-13 ja

2. The selected lever characteristic mode screen opens.
3. Turn selector knob (3) to highlight an operating mode number and then press the selector knob (3).

Mode	Attachment Operating Speed	
0	Standard	Standard
1	Slow in all ranges	Slow in all ranges
2	Even slower in all ranges	Even slower in all ranges

4. The check box of the selected mode number is lit.

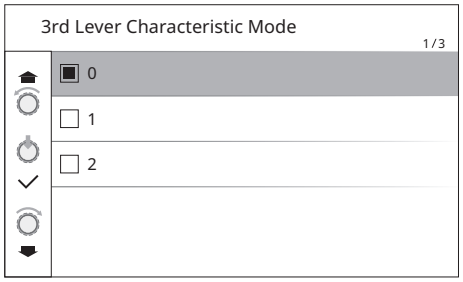

MNUD-01-291 en_GB

Cylinder End Soft Stop

This function slows the operation of the lift arm and the bucket cylinder when near their cylinder ends, so they stop softly.

1. From the Control Levers settings screen, highlight "Cylinder End Soft Stop" (1) and then press selector knob (2).

   NOTE

   For how to display the Control Levers settings screen, refer to "Displaying the Control Levers Setting Menus" on page (1-95).

2. The "cylinder end soft stop" (1) switch is displayed. If the bar is lit and the round button is on the right side, it is ON.

ON Position

MNTL-01-013 ja

3. The switch toggles ON/OFF each time selector knob (2) is pressed.
   When set to ON, it stops before cylinder ends, reducing shock.

   NOTE

   - *If the tip-off mode is selected, the cylinder end soft stop function turns ON automatically.*
   - *Shock reduction might be insufficient in low hydraulic temperature, warm up the machine enough in advance.*

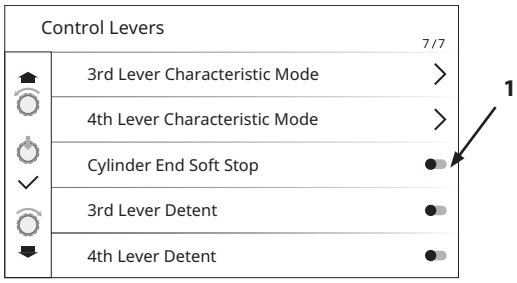

MNTK-01-288-1 en_GB

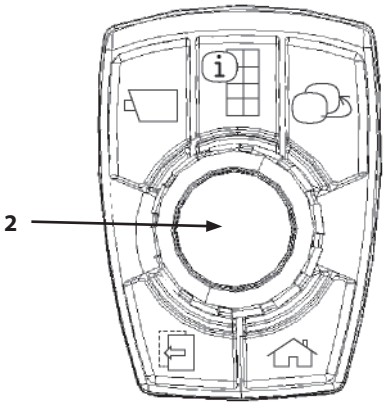

MNUD-01-252-12 ja

3rd/4th Lever Detent Setting (Optional)

This is for enabling the 3rd/4th lever detents.

1. From the Control Levers settings screen, highlight 3rd (1) or 4th (2) Lever Detent and then press selector knob (3).

   NOTE

   For how to display the Control Levers settings screen, refer to "Displaying the Control Levers Setting Menus" on page (1-95).

2. The switch for turning the detent of the selected lever ON/OFF is displayed.
   If the bar is lit and the round button is on the right side, it is ON.

ON Position

MNTL-01-013 ja

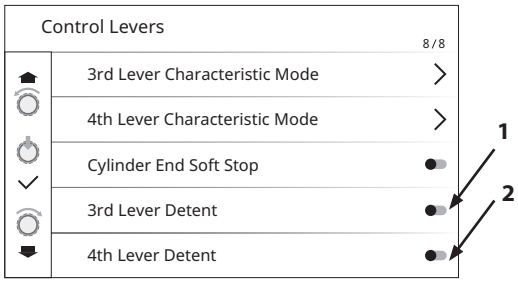

MNUD-01-288-1 en_GB

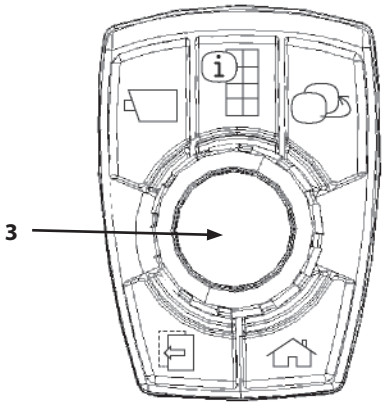

MNUD-01-252-13 ja

3. The switch toggles ON/OFF each time selector knob (2) is pressed.
   When the 3rd lever detent is turned ON, its function is enabled.
   When the 4th lever detent is turned ON, its function is enabled.
   When the detent function is enabled and the lever is operated full throw and held for a moment, it goes into detent mode. So even if the lever is returned to neutral, the attachment continues to operate. If the lever is operated again, it cancels the detent.
   For information on lever operation, refer to Section 5.

   NOTE

   During detent operation, 3rd lever detent icon (4) or 4th lever detent icon (5) lights up.

MNTL-01-233-7 ja

MNTL-01-234-3 ja

Detent Operating (Down)
MNUD-01-311 ja

Detent Operating (Up)
MNUD-01-312 ja

Bucket Dump Stopper Contact Cylinder Length Learning

IMPORTANT

Be sure to perform learning after changing the bucket.

This is for learning the cylinder length at which the bucket contacts the bucket dump stopper.

1. Start the engine and set it to slow idle. Do not depress the accelerator pedal.
2. Press selector knob (1) on the basic screen to open the main menu of the sub monitor.
3. Turn selector knob (1) to highlight Setting and then press the selector knob.
   Turn selector knob (1) to highlight Machine Setting (2) and then press the selector knob.
4. Turn selector knob (1) to highlight "Bucket Dump Stopper Contact Cylinder Length Learning" (3) and then press the selector knob. The learning screen opens.

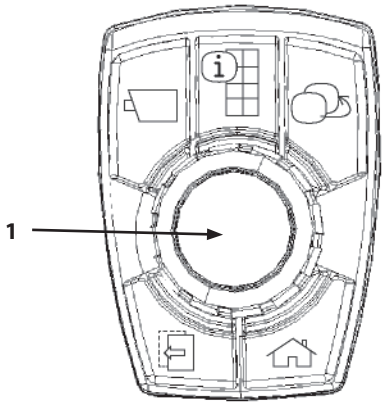

MNUD-01-252-11 ja

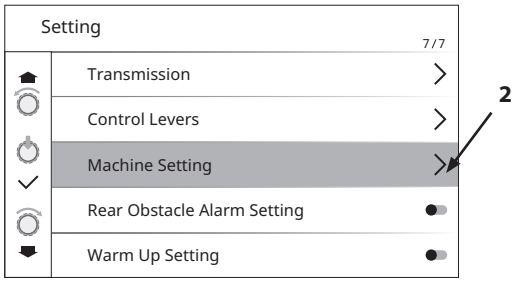

MNUD-01-267-1 en_GB

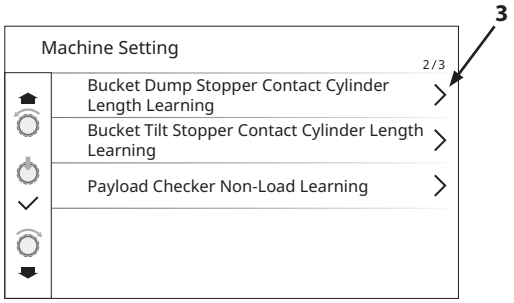

MNUD-01-279-1 en_GB

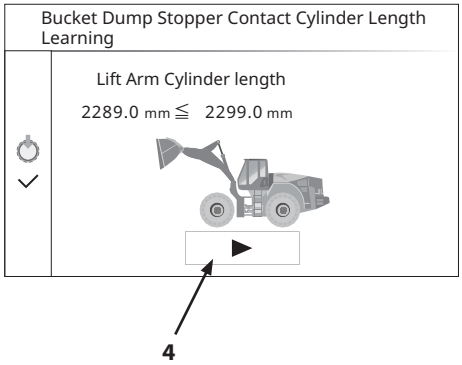

MNUD-01-286-1 en_GB

IMPORTANT

During learning, turn OFF the end soft stop function and operate the levers so the lift arm cannot go any higher and the bucket so it cannot dump any further.

5. Operate the lift arm so it reaches its highest position. With the lift arm at its highest, dump the bucket to its furthest position. Make sure the bucket contacts the dump stopper.
6. When learning conditions are met, start button (4) is displayed on the learning screen. Press selector knob (1) to start learning.

   NOTE

   If learning conditions are not met, the start button (4) is not displayed. Operate the levers so the lift arm and the bucket are in the specified positions.

7. Once the "Completed" message is displayed, turn the key switch OFF to complete learning.
8. Continue on to bucket dump stopper contact cylinder length learning. For the procedure for doing so, refer to "Bucket Tilt Stopper Contact Cylinder Length Learning" on page (1-103).

Bucket Tilt Stopper Contact Cylinder Length Learning

IMPORTANT

Be sure to perform learning after changing the bucket.

This is for learning the cylinder length at which the bucket contacts the bucket tilt stopper.

1. Start the engine and set it to slow idle. Do not depress the accelerator pedal.
2. Press selector knob (1) on the basic screen to open the main menu of the sub monitor.
3. Turn selector knob (1) to highlight Setting and then press the selector knob.
   Turn selector knob (1) to highlight Machine Setting (2) and then press the selector knob.
4. Turn selector knob (1) to highlight Bucket Tilt Stopper Contact Cylinder Length Learning (3) and then press the selector knob. The learning screen opens.

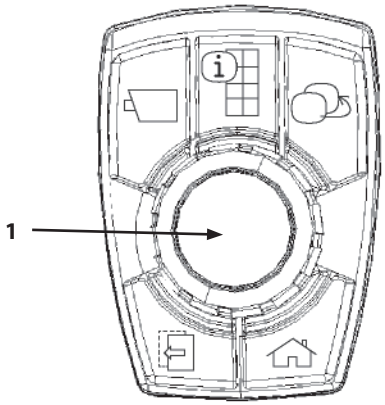

MNUD-01-252-11 ja

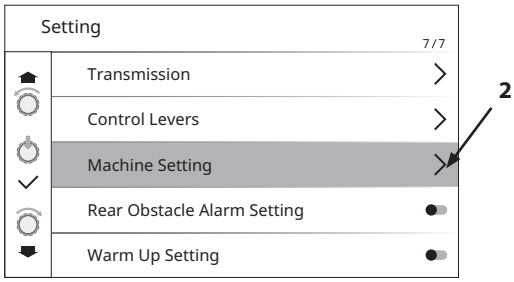

MNUD-01-267-2 en_GB

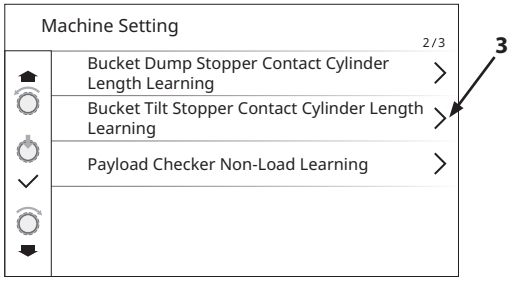

MNUD-01-279-2 en_GB

IMPORTANT

Operate the levers so the lift arm is positioned within the specified range and the bucket is tilted back so it cannot go any further.

5. Raise the lift arm so the height of the hinge pin is within the range displayed on the learning screen (operating posture position).
   With the lift arm in the operating position, fully tilt back the bucket. Make sure the bucket contacts the tilt stopper.
6. When learning conditions are met, start button (4) is displayed on the learning screen. Press selector knob (1) to start learning.

   NOTE

   If learning conditions are not met, the start button (4) is not displayed. Operate the levers so the lift arm and the bucket are in the specified positions.

7. Once the “Completed” message is displayed, turn the key switch OFF to complete learning.
8. Continue on to Payload Checker Non-Load Learning. For details about how to do so, refer to “Payload Checker Non-Load Learning” on page (1-104).

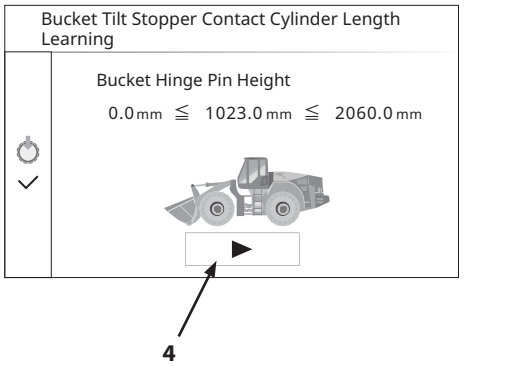

MNUD-01-302-1 en_GB

Payload Checker Non-Load Learning (ZW140-7,160-7 only)

IMPORTANT

Be sure to perform learning after changing the bucket.

This is for learning load operating conditions when the bucket is empty.

Learning at Engine Low Idle

1. Start the engine.
2. Press selector knob (1) on the basic screen to open the main menu of the sub monitor.
3. Turn selector knob (1) to highlight Setting and then press the selector knob.
   Turn selector knob (1) to highlight Machine Setting (2) and then press the selector knob.
4. Turn selector knob (1) to highlight Payload Checker Non-Load Learning (3) and then press the selector knob.
   Turn selector knob (1) to highlight “Low Idle Learning” (4) and then press the selector knob.
5. Warm up the hydraulic system until its oil temperature is within the range of 40°C to 80°C.

   NOTE

   For details on warming up the hydraulics, refer to “Warmup” on page (3-15).

6. Lower the lift arm to its lowest position. With the lift arm in its lowest position, fully tilt back the bucket. Make sure the parking brake is ON and all the Forward/Reverse lever and switches are in neutral (N).

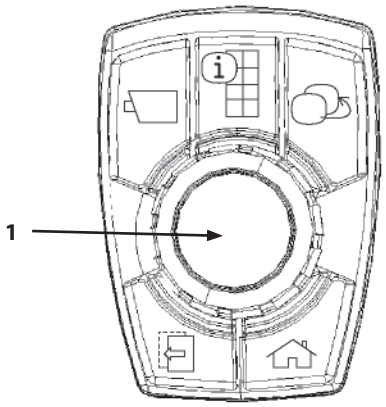

MNUD-01-252-11 ja

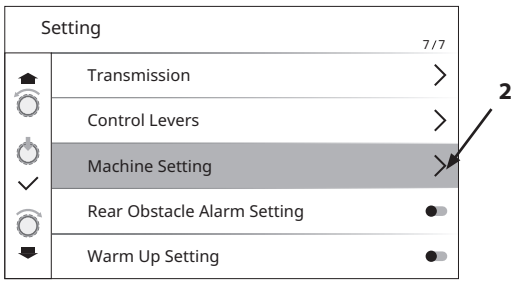

MNUD-01-267-2 en_GB

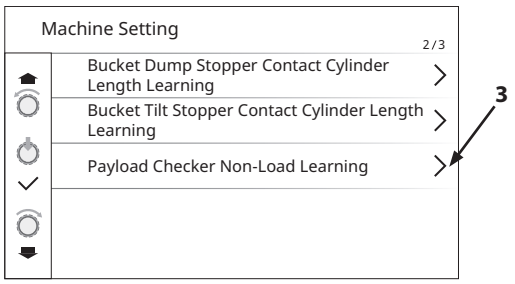

MNUD-01-279-3 en_GB

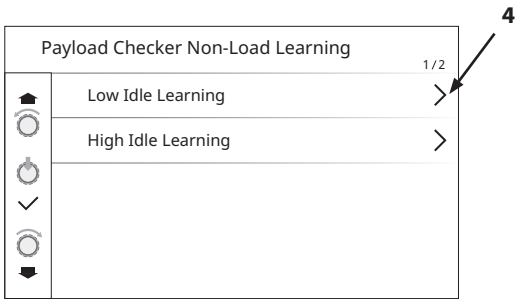

MNUD-01-347-1 en_GB

7. When learning conditions are met, start button (5) is displayed on the learning screen. Press selector knob (1) to start learning.

   NOTE

   If learning conditions are not met, the start button (5) is not displayed.

IMPORTANT

Keep the engine at slow idle during learning and do not depress the accelerator pedal.

8. When the “Learning” message appears, raise the lift arm to its highest position.
9. Once the “Completed” message is displayed, turn the key switch OFF to complete learning.
   If “Failed.” is displayed, turn the key switch OFF and redo the procedure from step 1.

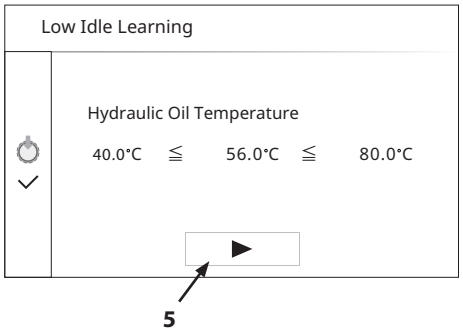

MNUD-01-348-1 en_GB

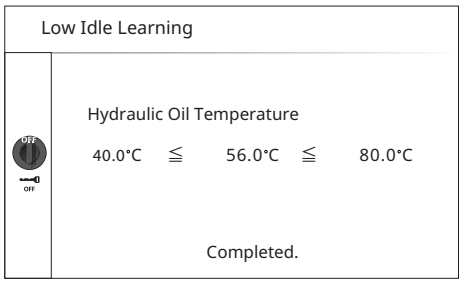

MNUD-01-350 en_GB

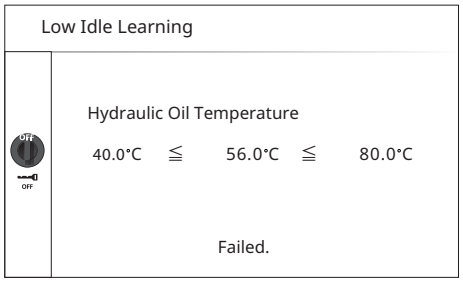

MNUD-01-351 en_GB

Learning at Engine High Idle

10. Start the engine.
11. Press selector knob (1) on the basic screen to open the main menu of the sub monitor.
12. Turn selector knob (1) to highlight Setting>Machine Setting>Payload Checker Non-Load Learning and then press the selector knob. (For details on menu selections, refer to the low idle learning procedures.)
13. Turn selector knob (1) to highlight “High Idle Learning” (6) and then press the selector knob.
14. Make sure the hydraulic oil temperature is in the range of 40°C to 80°C. If outside the range, warm up the hydraulics.
15. Lower the lift arm to its lowest position. With the lift arm in its lowest position, fully tilt back the bucket. Make sure the parking brake is ON and the Forward/Reverse lever and switches are in the forward (F) position.
16. Make sure that only the LED in the middle of power mode switch (7) is lit. If all LEDs are off, press power mode switch (7).

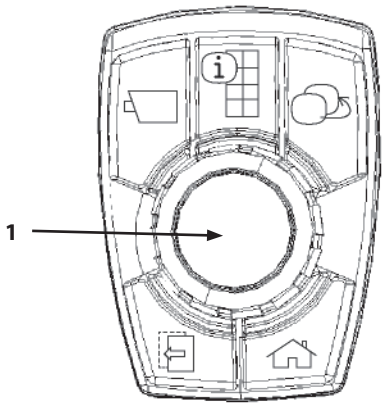

MNUD-01-252-11 ja

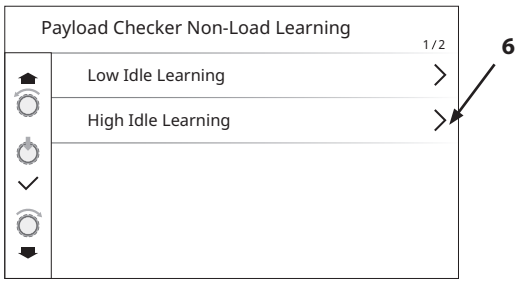

MNUD-01-347-2 en_GB

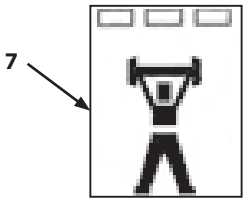

MNUD-01-212-1 ja

	Pilot Lamp	
	■ ■ ■	■ □ ■
Function	OFF	ON

□: LED ON

■: LED OFF

17. When learning conditions are met, start button (8) is displayed on the learning screen.
18. Depress the accelerator pedal.
    With the engine operating at high idle, press selector knob (1) to start learning.

    NOTE

    If learning conditions are not met, the start button (8) is not displayed.

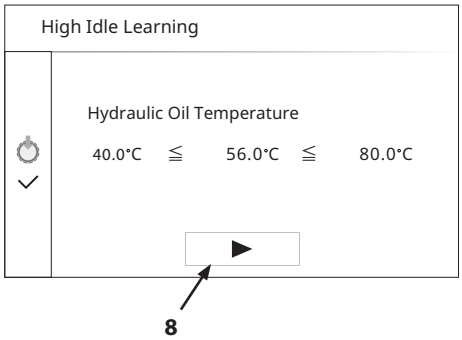

MNUD-01-349-1 en_GB

IMPORTANT

While learning, press and hold the accelerator pedal to maintain high idle.

19. When the “Learning” message appears, raise the lift arm to its highest position.
20. Once the “Completed” message is displayed, lower the lift arm to a safe height and turn the key switch OFF to complete learning. If “Failed.” is displayed, turn the key switch OFF and redo the procedure from step 10.

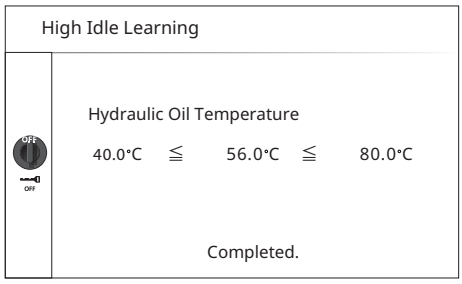

MNUD-01-352 en_GB

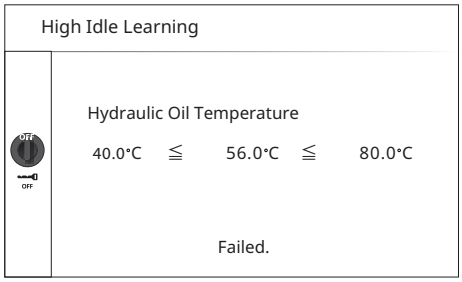

MNUD-01-353 en_GB

Rear Obstacle Alarm Settings ON/OFF (Optional)

This is for selecting whether or not to sound the buzzer when the rear obstacle alarm level is low.

1. Press selector knob (1) on the basic screen to open the main menu of the sub monitor.

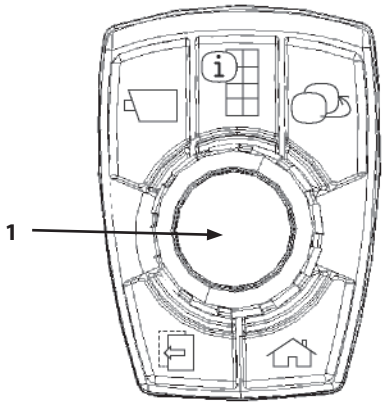

MNUD-01-252-11 ja

2. Turn selector knob (1) to highlight Setting (2) and then press the selector knob.

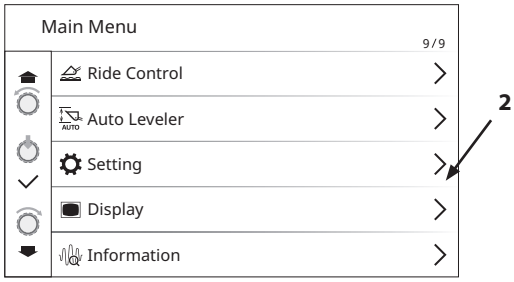

MNUD-01-264-6 en_GB

3. ON/OFF switch of “Rear Obstacle Alarm Setting” (3) is displayed.
   If the bar is lit and the round button is on the right side, it is ON.

ON Position

MNTL-01-013 ja

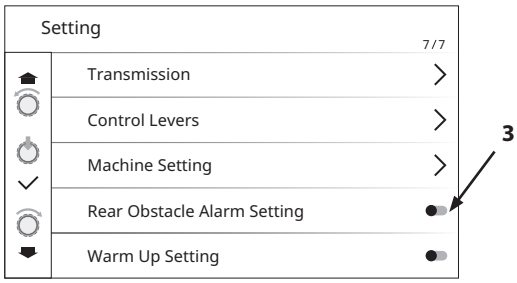

MNUD-01-301-1 en_GB

4. The switch toggles ON/OFF each time selector knob (1) is pressed.

NOTE

The buzzer works as follows according to the distance to the obstacle and this setting.
There are 2 types of rear obstacle detection and warning screens, and buzzer patterns. For details, refer to "Rear Obstacle Detection and Warning" on page (1-71).

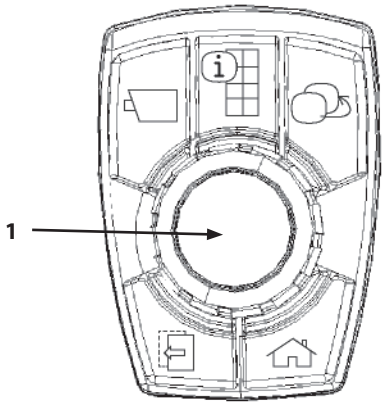

MNUD-01-252-11 ja

A Type

Alarm Level	Graph Bar level	Buzzer Setting	
		ON	OFF
1	A, Yellow	No sound	No sound
2	B, Yellow	Small short beep	No sound
3	B, Yellow	Large long beep	Large long beep
4	C, Red	Large long beep	Large long beep

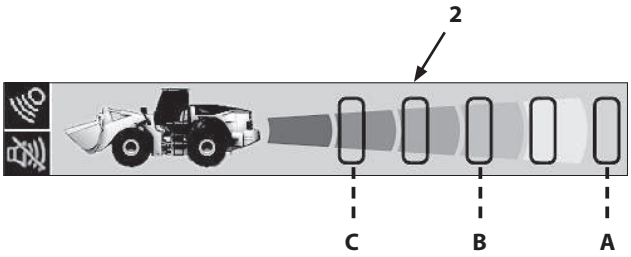

A Type

MNUD-01-314-2 ja

B Type

Alarm Level	Graph Bar level	Buzzer Setting	
		ON	OFF
1	A, Yellow	No sound	No sound
2	B, Yellow	Slow short beep	No sound
3	C, Red	Quick short beep	Quick short beep
4	D, Red	Long beep	Long beep

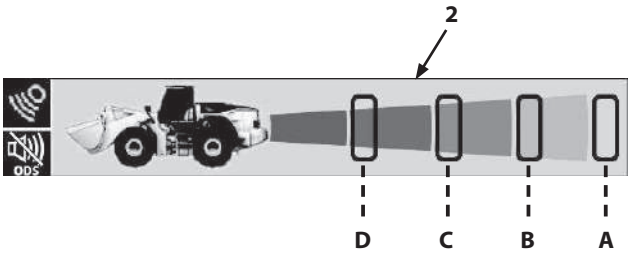

B Type

MNTL-01-242-2 ja

Warming Up Settings ON/OFF

When the warming up settings is ON, the engine speed increases when the engine starts and when certain operating conditions are met.

NOTE

For details on warming up via the warming up settings, refer to "Warming Up in Cold Weather" on page (3-16).

1. Press selector knob (1) on the basic screen to open the main menu of the sub monitor.

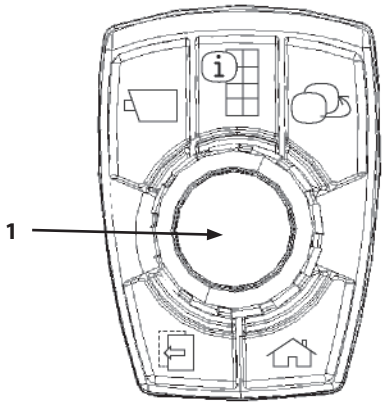

MNUD-01-252-11 ja

2. Turn selector knob (1) to highlight Setting (2) and then press the selector knob.

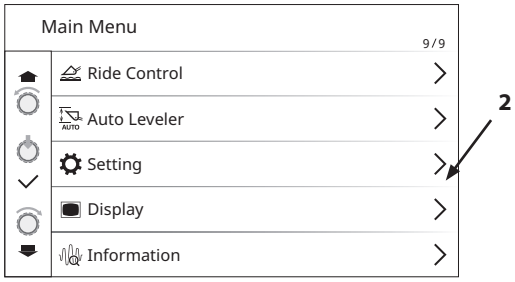

MNUD-01-264-6 en_GB

3. The ON/OFF switch of Warming Up Settings (3) is displayed. If the bar is lit and the round button is on the right side, it is ON.

ON Position

MNTL-01-013 ja

4. The switch toggles ON/OFF each time selector knob (1) is pressed.

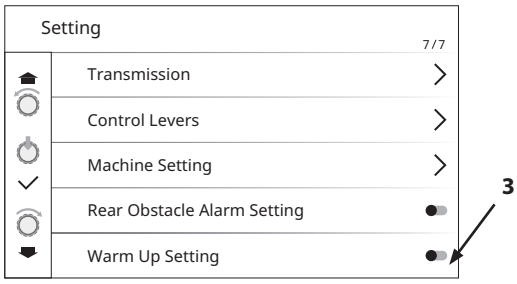

MNUD-01-301-2 en_GB

Displaying the Display Menu

1. Press selector knob (1) on the basic screen to open the main menu of the sub monitor.

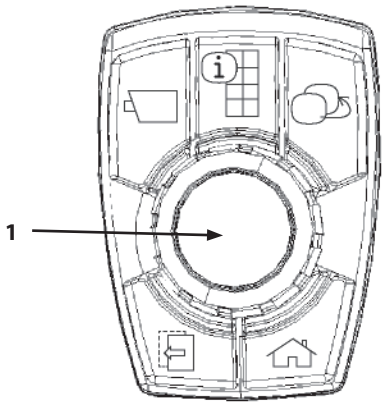

MNUD-01-252-11 ja

2. Turn selector knob (1) to highlight Display (2) and then press the selector knob.

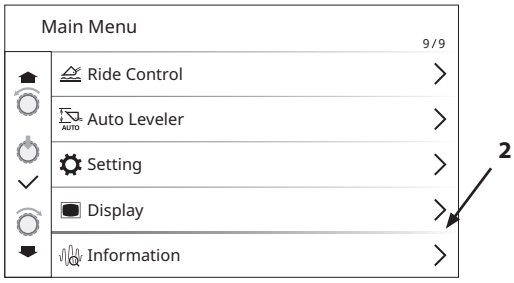

MNUD-01-264-7 en_GB

3. Turn selector knob (1) to select an item, and then press it to set the selection.

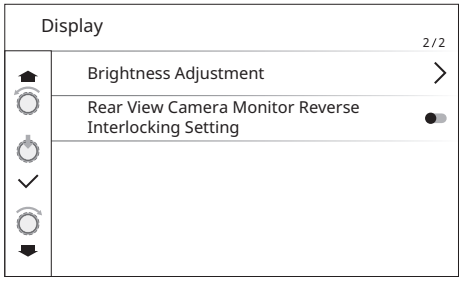

MNUD-01-298 en_GB

Brightness Adjustment Procedure

The brightness of the sub LCD monitor can be adjusted.

1. Select “Brightness Adjustment” (1) from the display menu screen and then press selector knob (2).

   NOTE

   For how to display the display menu, refer to “Displaying the Display Menu” on page (1-111).

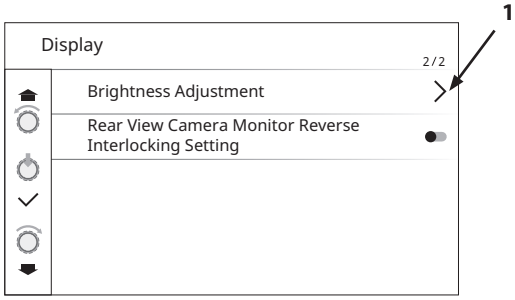

MNUD-01-298-1 en_GB

2. Turn selector knob (2) to the right to increase screen brightness.
   Turn selector knob (2) to the left to decrease screen brightness.
   Brightness can be changed up to 100%, 5% at a time in 20 steps. (Level 0% (off) cannot be selected.)

   NOTE

   When lights are turned ON, the moon symbol replaces the sun symbol (3). Brightness can be adjusted for day mode and night mode respectively.

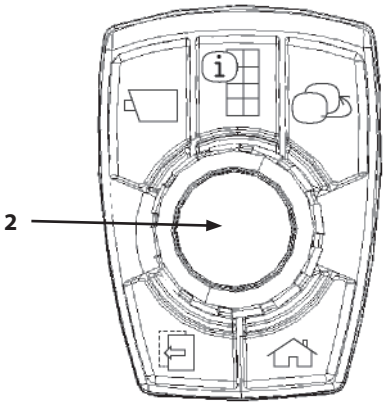

MNUD-01-252-12 ja

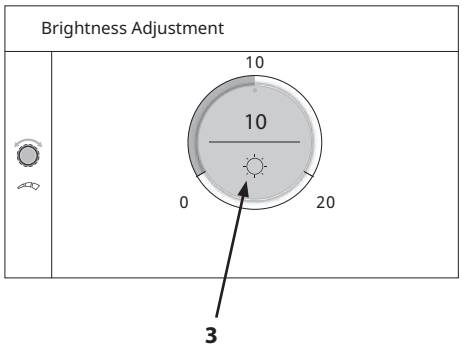

MNUD-01-299-1 en_GB

Rear View Camera Monitor Reverse Interlocking Setting (Optional)

NOTE

This menu is only displayed if aerial angle cameras (optional) are installed.

This is for selecting the camera images to be displayed on the monitor when backing up.

1. Select “Rear View Camera Monitor Reverse Interlocking Setting” (1) from the display menu and then press selector knob (2).

   NOTE

   For how to display the display menu, refer to “Displaying the Display Menu” on page (1-111).

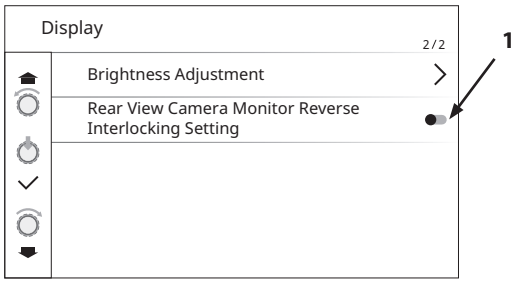

MNUD-01-298-2 en_GB

2. The ON/OFF switch of Rear View Camera Monitor Reverse Interlocking Setting (1) is displayed.
   If the bar is lit and the round button is on the right side, it is ON.

ON Position

MNTL-01-013 ja

3. The switch toggles ON/OFF each time selector knob (2) is pressed.

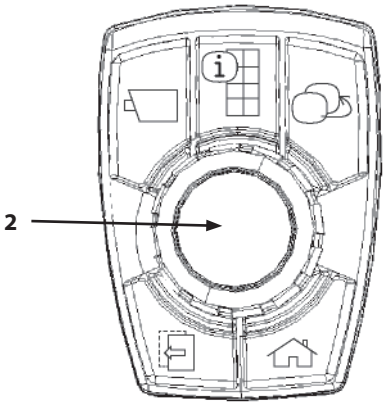

MNUD-01-252-12 ja

Shift Lever/ Switch Position	Rear View Camera Monitor Reverse Interlocking Setting	Sub Monitor Image
Reverse (R)	ON	Rear View Camera Image Only 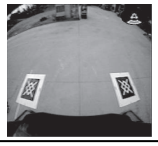
Forward (F) Neutral (N)	ON	Turn selector knob (1) to switch between patterns. ↔ 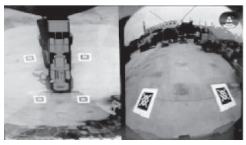 *NOTE* *Only displayed if aerial angle cameras (optional) are installed.*
Forward (F) Neutral (N) Reverse (R)	OFF	

Displaying Information Menu

1. Press selector knob (1) on the basic screen to open the main menu of the sub monitor.

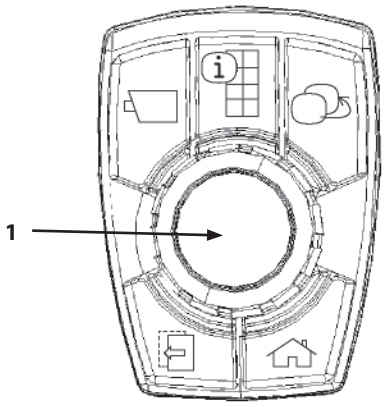

MNUD-01-252-11 ja

2. Turn selector knob (1) to highlight Information (2) and then press the selector knob.

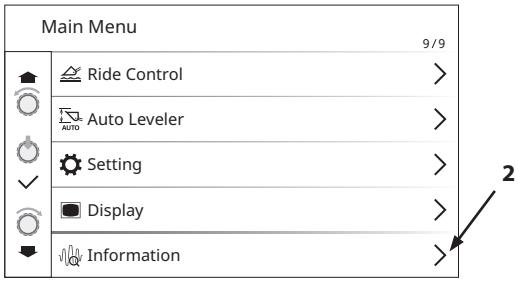

MNUD-01-264-8 en_GB

3. Turn selector knob (1) to select an item, and then press it to set the selection.

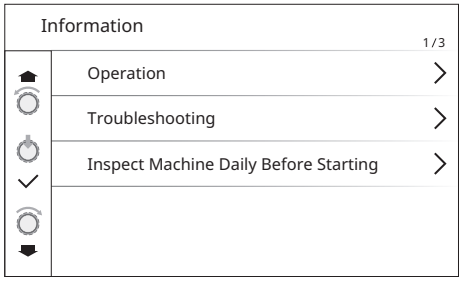

MNUD-01-293 en_GB

Operation Information

Hours in operation and distance travelled can be displayed as operation information.

1. Highlight “Operation” (1) from the Information menu and then press selector knob (2).

   NOTE

   For how to display the Information menu, refer to “Displaying the Information Menu” on page (1-115).

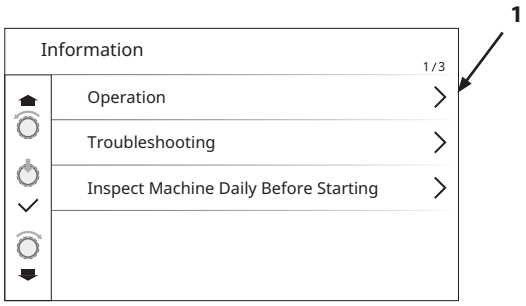

MNUD-01-293-1 en_GB

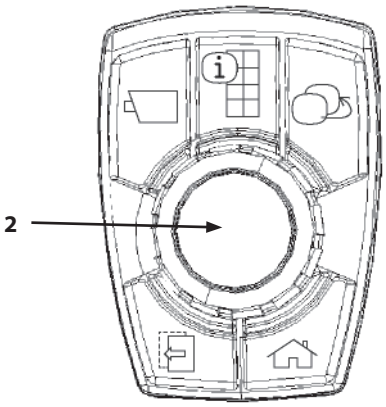

MNUD-01-252-12 ja

2. The Operation screen (3) opens.
3. Turn selector knob (2) to highlight Machine Information (4), and then press the selector knob to display machine information.
   - Hour Meter (5)
     Cumulative hours in operation
   - Odometer (6)
     Cumulative distance travelled
4. Press selector knob (2) to open Operation information screen (3).

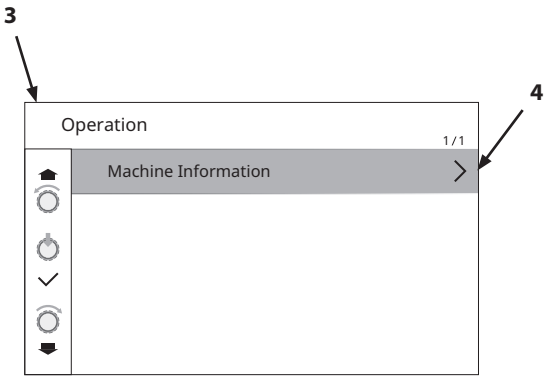

MNUD-01-303-1 en_GB

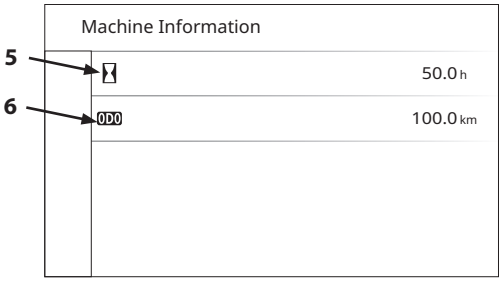

MNUD-01-304-1 en_GB

Troubleshooting

Active fault code(s) are displayed for each controller, indicating where they were generated.

1. Highlight “Troubleshooting” (1) from the Information menu and then press selector knob (2).

   NOTE

   For how to display the Information menu, refer to “Displaying the Information Menu” on page (1-115).

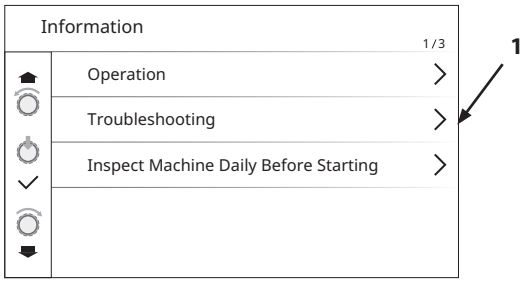

MNUD-01-293-2 en_GB

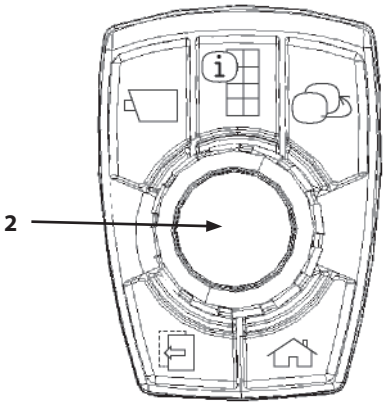

MNUD-01-252-12 ja

2. The Troubleshooting screen (3) opens.
3. The number of active fault codes are indicated in parentheses to the right of their corresponding controller.

   NOTE

   Fault code (00) means there are no active faults.

4. Turn selector knob (3) to select a controller, and then press it to display active fault codes.
   (Here, main controller (4) is selected.)

   NOTE

   - *It does not show a log of past errors.*
   - *The same information is shown on the main monitor as well. For how to check fault code from the main monitor, refer to "Troubleshooting" on page (1-52).*

IMPORTANT

Consult Authorized Dealer with troubleshooting results.

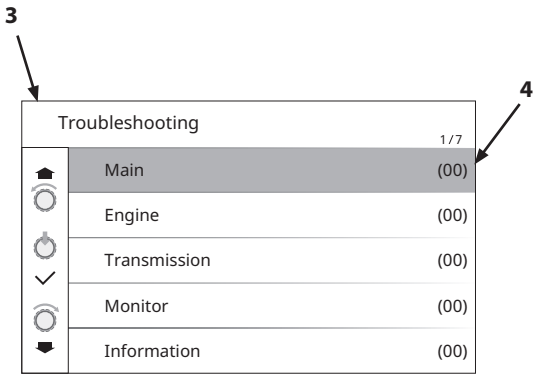

MNUD-01-306-1 en_GB

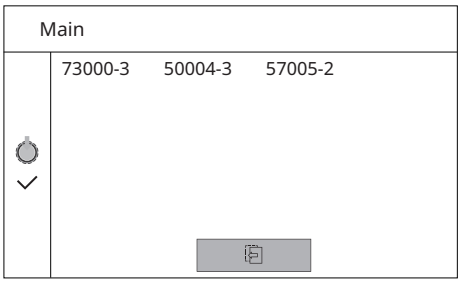

MNUD-01-307 en_GB

Inspect Machine Daily Before Starting

This is for selecting the items to check daily before starting work. Advice messages are displayed for the selected items.

1. Highlight “Inspect Machine Daily Before Starting” (1) from the Information menu and then press selector knob (2).

   NOTE

   For how to display the Information menu, refer to “Displaying the Information Menu” on page (1-115).

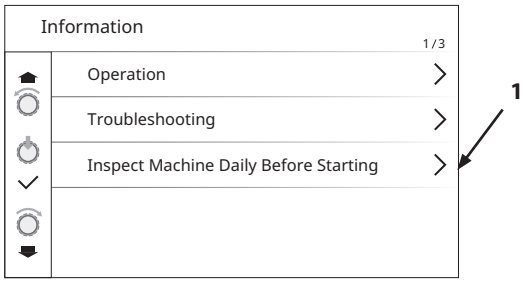

MNUD-01-293-3 en_GB

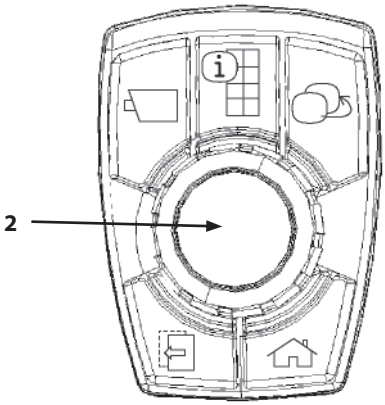

MNUD-01-252-12 ja

2. Inspect Machine Daily Before Starting screen (3) opens.

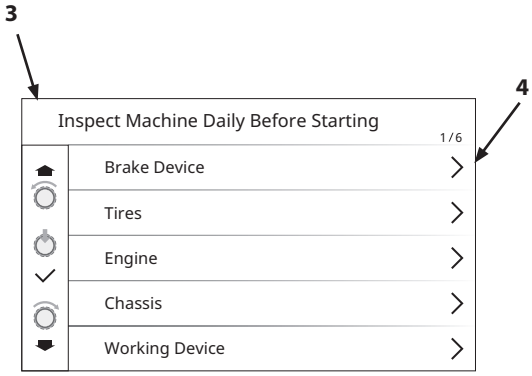

MNUD-01-294-1 en_GB

3. Turn selector knob (2) to select an item, and then press it to display the inspection item.
   (Here, Brake Device (4) is selected.)

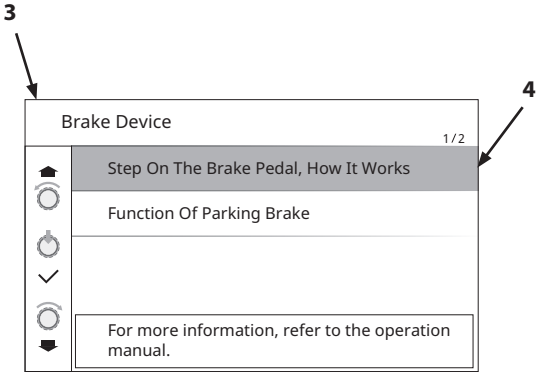

MNUD-01-295-1 en_GB

Inspection Item

Brake Device	Step on the brake pedal, how effective
	Function of parking brake
Tires	Tire pressure
	Cracks, damage abnormal wear to tires
	Installation of tire discs and wheels
Engine	Level of engine oil and coolant, and their dirtiness
	Loose, damaged alternator drive belt
	Ease of starting, exhaust gas color, and noise
	Oil and water leaks, damage to hoses and pipes
	Clogging and damage to radiator, oil cooler and intercooler
	Loose and/or missing mounting bolts and nuts
	Condition at slow idle speed and acceleration
	Check crankcase breather tube
	Fuel moisture separator discharge
	Check air cleaner discharge valve
Chassis	Transmission and accelerator oil leakage
	Check for any remaining fuel, leaks, and contamination in the fuel tank, and for water drainage
	Hydraulic oil level, and leaks from hydraulic oil tank
	Operation, play and operating force of all control levers and steering
	Operation of all hydraulic components, oil leaks and damage to pipes and hoses
	Deformity, breakage, and abnormal noise at each part
	Window washer fluid
	Effectiveness of wipers
	Level, leaks and contamination in DEF tank
	Leaks from DEF hoses
	Dirt around the aftertreatment device
Working Device	Check cylinders, pipe lines and hoses for oil leaks and damage
	Check for loose, worn, missing cutting edge
	Wear and damage to the bucket
	Condition of lubrication around wheel loader front attachment
	Damaged pin lock bolts, stoppers and links
	Loose and/or missing mounting bolts and nuts

Others	Defective, dirty or damaged lighting equipment and direction indicators
	Defective rear-view mirror and reflectors
	Dirt or damage to reflectors and license plate or VIN
	Functionality of each instrument, switch, alarm and back buzzer
	Deformed or damaged ROPS cab
	Abnormal outside appearance of machine
	Battery terminal looseness
	Wear and damage to seat belt
	Damaged steps

Switch Panel (Illustration Content)

Following is a list of the switches on the switch panel mounted on the right-front pillar. LED lamps indicate the current setting for each switch function. For details, refer to the page in the parentheses ( ).

1- Deceleration Mode Switch (1-124)
2- Auto Shut-Down Switch (Optional) (1-125)
3- (Not Used)
4- (Not Used)
5- Traction Control Switch (1-127)
6- Fan Reverse Rotation Switch (Optional) (1-128)
7- Forward/Reverse Selector Switch (1-130)
8- Approach Speed Control Switch (1-132)

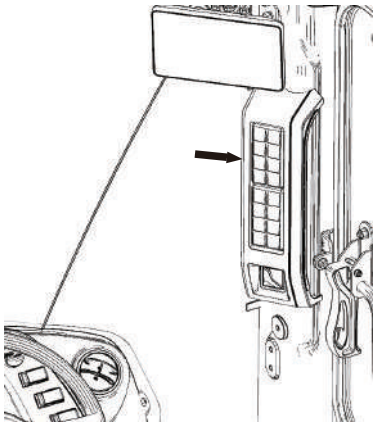

MNTL-01-039-4 ja

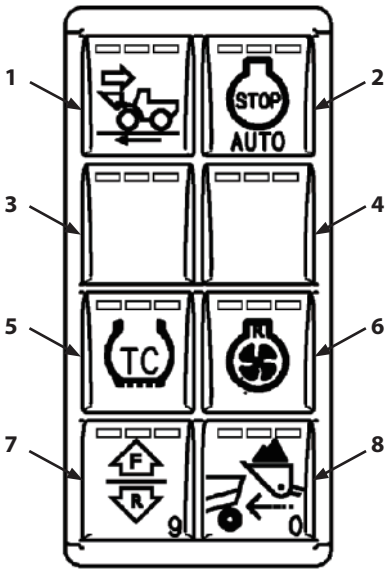

MNTL-01-051-2 ja

9- Aftertreatment Device Regeneration Switch (1-135)
10- Power Mode Switch (1-133)
11- Aftertreatment Device Regeneration Inhibit Switch (1-134)
12- Ride Control Switch (1-136)
13- Front Wiper Switch (1-137)
14- Rear Wiper Switch (1-137)
15- Front Washer Switch (1-139)
16- Rear Washer Switch (1-139)

NOTE

A list of the current switch settings can be checked on the sub monitor by pressing switch panel settings confirmation switch (17) on the right console. For how to check the switch settings list, refer to "Checking Switch Panel Settings" on page (1-61).

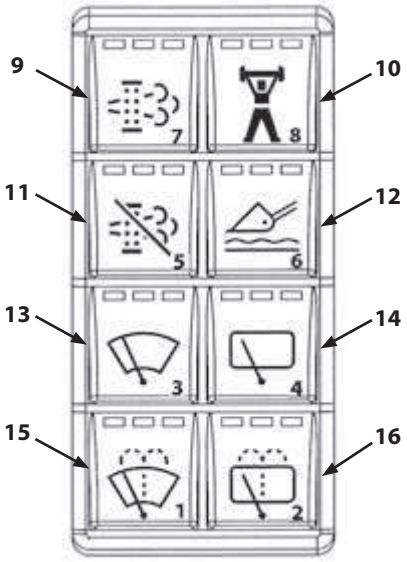

MNUD-01-202-2 ja

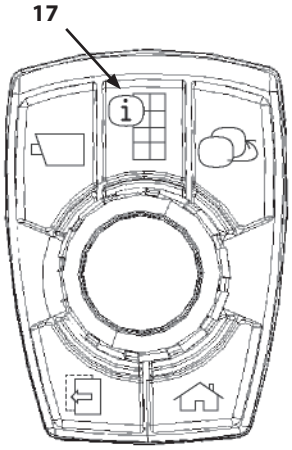

MNUD-01-252-14 ja

Deceleration Mode Switch

Deceleration mode switch (1) switches the rate of deceleration of the machine. The meaning of rate of deceleration here is how quickly the vehicle stops when the accelerator is released while driving.

It improves the feel of operation for the operator by choosing a rate of deceleration that suits the work environment and/or personal preferences.

Each time deceleration mode switch (1) is pressed, it toggles through its settings:
Normal→Hard→Soft→Normal.

Long-pressing deceleration mode switch (1) switches the setting to Normal.

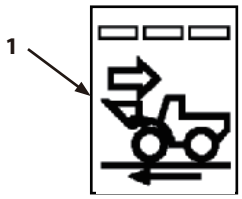

MNTL-01-219-1 ja

	Pilot Lamp		
	□ □ ■	□ □ □	□ ■ ■
Function	Normal	Hard	Soft

□: LED ON

■: LED OFF

[Soft]

This is the softest rate of deceleration. The stopping distance when trying to stop by releasing the accelerator is longer than the Normal setting.

[Normal]

This is the default setting.

[Hard]

This is the hardest rate of deceleration. The stopping distance when trying to stop by releasing the accelerator is shorter than the Normal setting.

Auto Shut-Down ON/OFF (Optional)

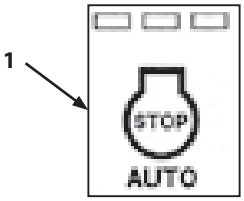

MNUD-01-204-1 ja

WARNING

This function stops the engine automatically. When using this function, be vigilant about the work itself and your surroundings.

Auto shut-down switch (1) turns the auto shut-down function ON/OFF.

NOTE

The auto shut-down timer on the sub monitor can be set between 1 to 30 minutes. For how to set the auto shut-down timer, refer to "Auto Shut-Down Time Setting" on page (1-93).

When the machine is parked under the following conditions and the specified time elapses, the engine stops automatically.

- Auto Shut-Down Switch (1) ON
- Engine operating
- Parking brake ON
- Forward/Reverse lever (switch) in neutral (N)
- Accelerator pedal not operated
- Brake pedal not operated
- Control lever not operated
- Steering wheel not operated
- Coolant, hydraulic oil, transmission oil not hot
- Aftertreatment device not being manually regenerated

NOTE

Thirty seconds prior to engine stop, a notice indicating engine to stop is displayed on the monitor and the buzzer sounds. Buzzer sounds once at 15 seconds prior to engine stop, then again at 5 seconds prior. If the engine is operated in some way before the engine stops, the auto shut-down function is disabled and the engine does not stop.

IMPORTANT

- **Do not leave the machine while auto shut-down is enabled. It may result in the battery going dead.**
- **For the engine to be stopped by the auto shut-down function, the key switch must be left in the ON position. To start the engine again, first turn the key OFF for a moment and then start it in the normal way.**

Auto Shut-Down Switch

Auto shut-down switch (1) turns the auto shut-down function ON/OFF.

[OFF]
All the LEDs of auto shut-down switch (1) are OFF. The auto shut-down function is OFF (disabled) and it does not function even if an auto shut-down time has been set.

[ON]
With all the LEDs of auto shut-down switch (1) OFF, press the switch. The middle LED lights and the auto shut-down function comes ON (enabled).

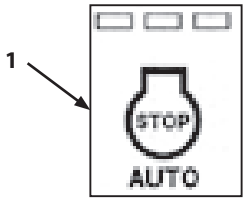

MNUD-01-204-1 ja

	Pilot Lamp	
	■ ■ ■	■ □ ■
Function	OFF	ON

□: LED ON

■: LED OFF

Traction Control Switch

Traction control switch (1) switches between traction control modes.

Selecting the appropriate maximum traction force to suit the work environment can prevent slipping and improve operator work efficiency.

Each time traction control switch (1) is pressed, it toggles through the settings OFF→Low→Middle→High→OFF.

[OFF]

This settings provides the greatest traction. It should be used during normal work.

[Low][Middle][High]

These limit the maximum traction. They are used when tires are apt to slip, such as when removing snow or with heavy loads on muddy ground.

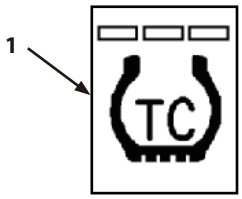

MNTL-01-220-1 ja

	Pilot Lamp			
	■ ■ ■	□ ■ ■	□ □ ■	□ □ □
Function	OFF	Low	Middle	High

□: LED ON

■: LED OFF

NOTE

The maximum traction force of each setting increases as follows.

"OFF" > "Low" > "Middle" > "High"

Fan Reverse Rotation Switch (Optional)

Fan reverse rotation switch (1) makes the hydraulically-driven fan turn in reverse. When the radiator is clogged, running the hydraulically-driven fan in reverse can blow out debris. Doing so periodically helps prevent clogging of the cooling system.
The fan reverse rotation setting toggles between ON/OFF each fan reverse rotation switch (1) is pressed.

[OFF]
All the LEDs of fan reverse rotation switch (1) are OFF. The fan only rotates in the normal direction to cool the inside of the engine room.

[ON]
With all the LEDs of fan reverse rotation switch (1) OFF, press fan reverse rotation switch (1). The middle LED lights and the fan starts turning in reverse.

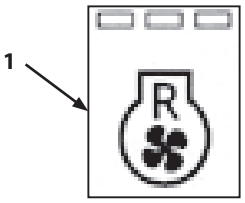

MNUD-01-208-1 ja

	Pilot Lamp	
	■ ■ ■	■ □ ■
Function	OFF	ON

□: LED ON

■: LED OFF

Fan Reverse Rotation (Auto)

Press fan reverse rotation switch (1).
The fan operates in the normal direction for 10 minutes, and then reverses automatically for 60 seconds (1 minute). Thereafter, it alternates between 30 minutes normal rotation→1 minute reverse→30 minutes normal, until fan reverse rotation switch (1) is turned OFF.

IMPORTANT

If an abnormal situation occurs, such as engine coolant overheating, reverse rotation may be forcibly canceled or the function of fan reverse rotation switch (1) disabled.

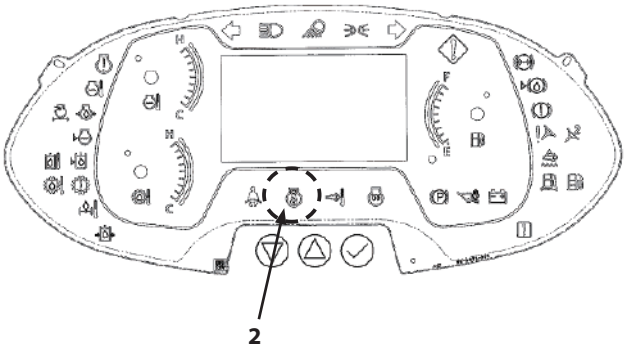

MNUD-01-030-7 ja

NOTE

- *Normal rotation time may be shortened automatically to 20 minutes due to coolant temperature or outside air temperature. It returns automatically to 30 minutes.*
- *The reverse rotation time is 90 seconds (1.5 minutes) when it is cold outside.*
- *Fan reverse rotation indicator (2) flashes when the fan rotation changes. (When fan reverse rotation indicator (2) is lit, pressing fan reverse rotation switch (1) makes the indicator start flashing.) Do not press fan reverse rotation switch (1) when indicator (2) is flashing. Doing so may cause it to malfunction.*
- *Fan reverse rotation indicator (2) lights during reverse rotation and goes OFF during normal fan rotation.*

Fan Reverse Rotation (Manual)

Long-press fan reverse rotation switch (1) to start reverse fan rotation.

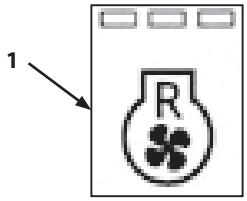

MNUD-01-208-1 ja

IMPORTANT

The fan can be switched between normal/reverse with the engine running. Operate fan reverse rotation switch (1) with the parking brake applied. When the parking brake is released, fan reversal is cancelled automatically after 1 minute. In addition, if an abnormal situation occurs, such as engine coolant overheating, reverse rotation may be forcibly canceled and/or signals from fan reverse rotation switch (1) may not be accepted.

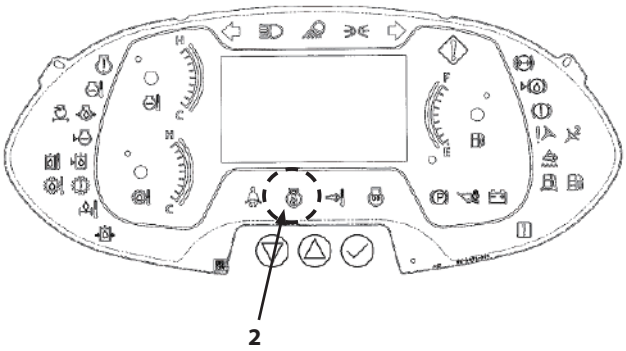

MNUD-01-030-7 ja

1. Close the side cover. Start the engine and make sure the parking brake is engaged.
2. Long-press fan reverse rotation switch (1). Fan reverse rotation indicator (2) starts to flash, then after about 1 minute, the indicator stays lit, and the switch from normal to reverse rotation is complete.
3. When done with this operation, press fan reverse rotation switch (1) again to return to the normal fan direction. Fan reverse rotation indicator (2) goes OFF.

Forward/Reverse Selector Switch

Forward/Reverse switch (1) enables Forward/Reverse switch (2) on the multi-function joystick lever.

When Forward/Reverse switch (1) is ON, Forward/Reverse switch indicator (3) lights on the main monitor. When it does, the LEDs of Forward/Reverse switch (1) do not light.

When Forward/Reverse switch (1) is ON, pressing either (F) or (R) on Forward/Reverse switch (2) puts the machine in forward or reverse.

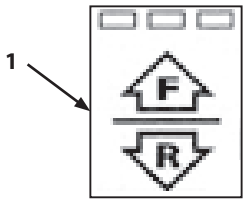

MNUD-01-209-1 ja

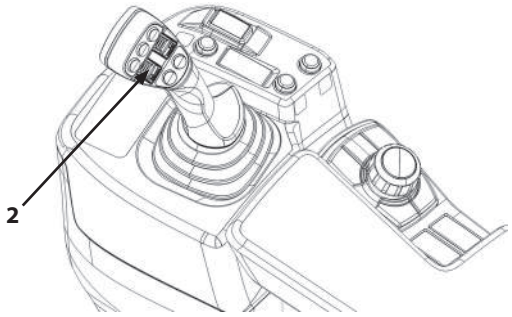

MNUD-01-099-1 ja

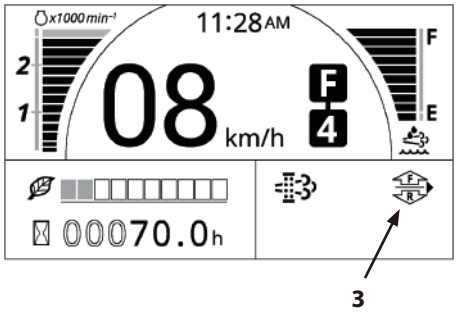

MNTL-MT-001-9 ja

Forward/Reverse Selector Switch

1. Put the parking brake switch in ON and engage the parking brake.
   Make sure both Forward/Reverse lever (4) and Forward/Reverse switch (2) are in neutral (N).

   WARNING

   In the interest of safety at this time, depress the brake pedal.

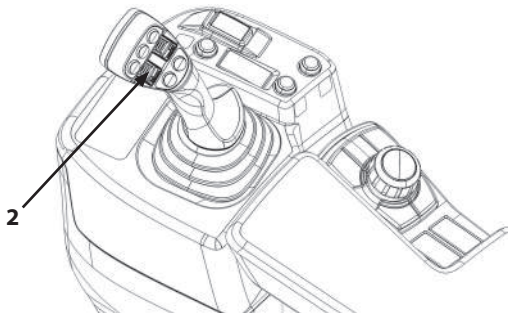

MNUD-01-099-1 ja

2. Turning Forward/Reverse switch (1) ON lights F-R switch indicator (3).

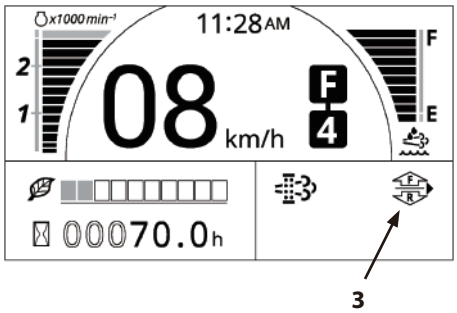

MNTL-MT-001-9 ja

3. Turn the parking brake switch OFF.
   Press either (F) or (R) on Forward/Reverse switch (2) to put the machine in forward or reverse.

   NOTE

   - *If either Forward/Reverse lever (4) or Forward/Reverse switch (2) is in any position other than (N), Forward/Reverse switch (1) will not turn ON. (Forward/Reverse switch (2) is disabled.) The sub monitor displays a message to confirm controls are in neutral.*
   - *For details on operating Forward/Reverse switch (2), refer to "Forward/Reverse Switches" on page (4-6) or "Switching between Forward/Reverse" on page (4-16).*

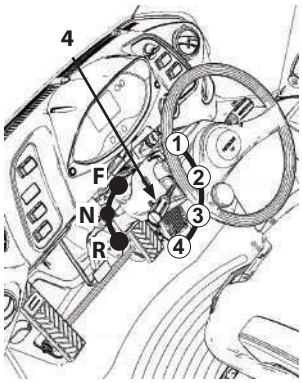

MNTL-01-044-2 ja

Approach Speed Control Switch

Approach speed control switch (1) sets the machine speed when approaching a truck to dump a load.

Each time approach speed control switch (1) is pressed, it toggles the machine speed from OFF→Fast→Middle→Slow→OFF, in order.

Loading to a dump truck is recognized by the lift arm height when moving forward at a certain speed or higher, and this reduces the speed.

The operator can set a preferred speed to suit travel distance and operating conditions, thus increasing fuel efficiency and operability.

NOTE

When the switch is set to OFF, the driving distance will be longer than normal. The approach speed is about 12 km/h. When Slow is selected, the speed is reduced to 6 to 7 km/h, even with the accelerator pedal fully depressed.

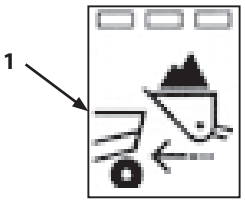

MNUD-01-210-1 ja

	Pilot Lamp			
	□ ■ ■	□ □ ■	□ □ □	■ ■ ■
Function	Fast	Middle	Slow	OFF

□: LED ON

■: LED OFF

Power Mode ON/OFF Switch

Pressing power mode switch (1) switches the power mode ON/OFF.

[OFF] (Standard Mode)
All the LEDs of power mode switch (1) are OFF.
This is suitable for working with an emphasis on fuel efficiency.
In automatic, the transmission shifts up relatively early.

[ON]
With all the LEDs of power mode switch (1) OFF, power mode switch (1). The middle LED lights and power mode starts up.
This is suited to heavy excavation, with an emphasis on workload.
In automatic, the transmission shifts up at standard timing.

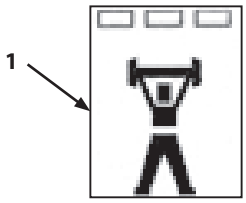

MNUD-01-212-2 ja

	Pilot Lamp	
	■ ■ ■	■ □ ■
Function	OFF	ON

□: LED ON
■: LED OFF

NOTE

Pressing the quick power switch turns the middle LED ON. For details on the quick power switch, refer to "Quick Power Switch" on page (1-156).

Aftertreatment Device Regeneration Inhibit Switch

IMPORTANT

Aftertreatment device regeneration can be inhibited from this screen, to prevent auto regeneration while operating the machine in a dusty area or indoors.

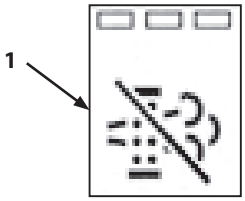

MNUD-01-213-1 ja

Pressing aftertreatment device regeneration inhibit switch (1) turns the function ON/OFF.
The aftertreatment device regeneration inhibit setting can be selected from the main monitor menu for either Auto/Manual or Auto Only. For details, refer to "Aftertreatment Device Regeneration Inhibition" on page (1-50).

	Pilot Lamp	
	■ ■ ■	■ □ ■
Function	OFF	ON

□: LED ON
■: LED ON

[OFF]
All the LEDs of aftertreatment device regeneration inhibit switch (1) are OFF.
The aftertreatment device regeneration inhibit function is OFF.
When the conditions are met, auto-regeneration is performed. Pressing aftertreatment device manual regeneration switch (3) on the switch panel starts manual regeneration. For details on the manual regeneration process, refer to "Aftertreatment Device Manual Regeneration" on page (1-7).

[ON]
With all of its LEDs OFF, press aftertreatment device regeneration inhibit switch (1). The middle LED lights and the aftertreatment device regeneration inhibit function turns ON. Regeneration inhibit indicator (2) is displayed on the main monitor.
Auto-regeneration does not operate automatically and manual regeneration cannot be performed.

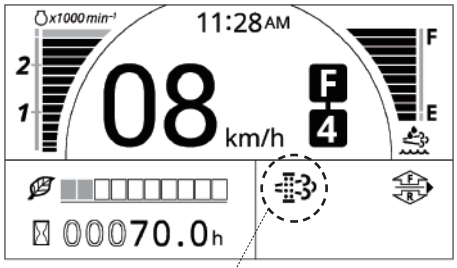

MNTL-MT-001-10 ja

MDAA-01-282-1 ja

IMPORTANT

If the machine is operated continuously with regeneration of the aftertreatment device inhibited, the device will end up getting clogged. When an aftertreatment device regeneration request is displayed, move the machine promptly to a safe location and perform a manual regeneration according to the specified procedure. Failure to perform a manual regeneration may result in damage to the aftertreatment device. For details on manual regeneration, refer to the "Aftertreatment Device" section.

Aftertreatment Device Regeneration Switch

Pressing aftertreatment device manual regeneration switch (3) starts manual regeneration. For details on the regeneration process, refer to “Aftertreatment Device Manual Regeneration” on page (1-7).

If an aftertreatment device manual regeneration request has not been made, manual regeneration will not start even if the switch is pressed.

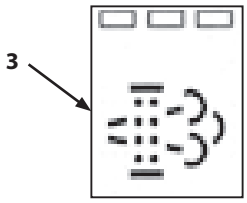

MNUD-01-211-1 ja

	Pilot Lamp	
	■ ■ ■	■ □ ■
Function	OFF	ON

□: LED ON

■: LED OFF

Ride Control Switch

WARNING

- **In the interest of safety, before operating the ride control switch, stop the machine and lower the bucket to the ground.**
- **Turn the ride control switch OFF when operating the front attachment with the float function (scooping, grading, snow removal, etc.), when driving, with the attachment raised or during maintenance and inspection. Under some conditions, the arm may rise or fall, resulting in unstable machine operation, leading to accident and/or injury.**
- **When working with the ride control operating, slow down. If a sudden load is applied to the attachment, a great deal of pressure will be transmitted to the accumulator, causing gas to leak.**

The ride control function suppresses vertical vibration of the attachment while driving, thus enabling a more comfortable ride. It also helps the machine travel more stably, thus preventing spilling the load from the bucket.

Ride Control Switch Operation

Pressing ride control switch (1) toggles the function between OFF and AUTO mode.

[OFF]
When ride control switch (1) is OFF, ride control does not operate.

[AUTO]
Switching ride control switch (1) to AUTO activates the vehicle speed sensor and its controller. When vehicle speed exceeds the speed setting, the function starts working automatically.
Ride control does not operate when the vehicle speed drops below the speed setting.

Ride control does not operate when the key switch is in its OFF position, even if ride control switch (1) is on AUTO. Further, ride control is cancelled if ride control switch (1) is on AUTO and the engine is stopped.

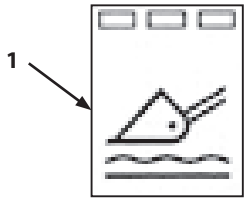

MNUD-01-214-1 ja

	Pilot Lamp	
	■ ■ ■	■ □ ■
Function	OFF	AUTO

□: LED ON

■: LED OFF

NOTE

When in a forward digging attitude, the system automatically adjusts the activation/deactivation vehicle speed setting so ride control will not work.

Front/Rear Wiper Switches

Press front wiper switch (1) to operate the front wiper.

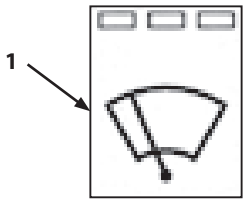

MNUD-01-215-1 ja

IMPORTANT

Pay attention to the condition of wipers and glass surface (when dry or frozen) as the glass, wiper blades, motor and relay can be scratched or damaged in such conditions.

	Pilot Lamp			
	■ ■ ■	□ ■ ■	□ □ ■	□ □ □
Function	OFF	INT	Low	High

□: LED ON

■: LED OFF

- When the windshield is dusty or encrusted with snow, wipe off the snow or dust and use the defroster to remove ice before using wipers.
- Use a freeze-resistant washer fluid.
- When the glass is dry, squirt washer fluid on it before using the wiper. Also, in relatively dry conditions (light snow or rain), continuous operation of the wiper may cause it to fail. Take precautions such as operating it intermittently or turning the switch off whenever not needed.
- If equipped with a defroster embedded in the glass, take care not to leave the switch ON for a long time as this may cause scorching of the wiper blades.

NOTE

If the key switch is turned OFF while the wiper is operating, it operates until it returns to its home position.

Front Wiper Operation

Each time front wiper switch (1) is pressed, it toggles the front wiper motion in the order OFF→INT→Low→High→OFF. Long pressing the switch turns it OFF.

[OFF]
The front wiper stops and returns to its home position.

[INT]
The front wiper operates intermittently.

[Low]
The front wiper operates at low speed.

[High]
The front wiper operates at high speed.

Rear Wiper Operation

Rear wiper switch (2) turns the rear wiper ON/OFF.

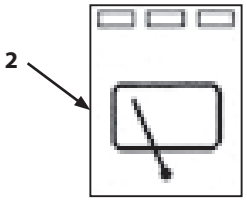

MNUD-01-216-1 ja

	Pilot Lamp	
	■ ■ ■	■ □ ■
Function	OFF	ON

□: LED ON

■: LED OFF

Front/Rear Washer Switch

Pressing washer switches (1)(2) sprays washer fluid on the front/rear windshields before their wipers operate.

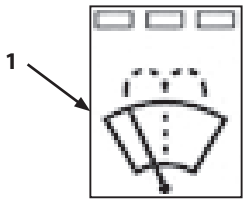

MNUD-01-217-1 ja

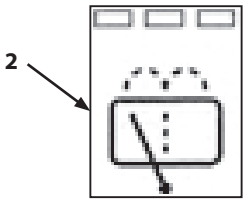

MNUD-01-218-1 ja

IMPORTANT

The motor in the washer tank may be damaged if washer fluid is sprayed for over 20 seconds, or if used without fluid being sprayed. Keep track of how long fluid is sprayed and that fluid is being sprayed.

- Use a freeze-resistant washer fluid.
- When the glass is dry, squirt washer fluid on it before using the wiper. Also, in relatively dry conditions (light snow or rain), continuous operation of the wiper may cause it to fail. Take precautions such as operating it intermittently or turning the switch off whenever not needed.

Washer Operation

When front washer switch (1) is pressed, it sprays washer fluid from the front nozzle and operates the front wiper. When rear washer switch (2) is pressed, it sprays washer fluid from the rear nozzle and operates the rear wiper.

NOTE

The LEDs of front washer switch (1) and rear washer switch (2) do not light.

Front Console Switches (Illustration Contents)

The names and layout of switches on the front console of the operator's station are shown below. For details, refer to the page in the parentheses ( ).

1- Parking Brake Switch (1-141)
2- Work Light Switch (1-143)
3- Hazard Light Switch (1-144)
4- Shift Switch (1-145)
5- Horn Switch (1-146)
6- Turn Signal Lever (4-4)
   Light Switch (1-147)
   High-Low Beam Switch (1-148)
7- Key Switch (1-149)
8- 1st Speed Limit Switch (1-150)
9- Emergency Steering Operation Check Switch (Machine Equipped with Emergency Steering System) (1-151)

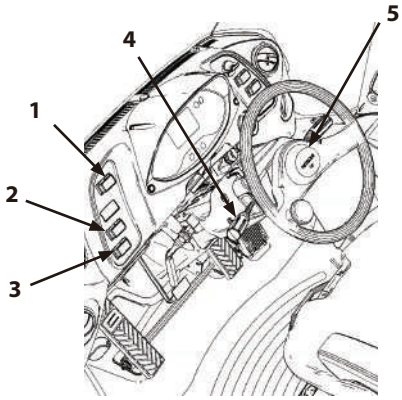

MNTL-01-044-3 ja

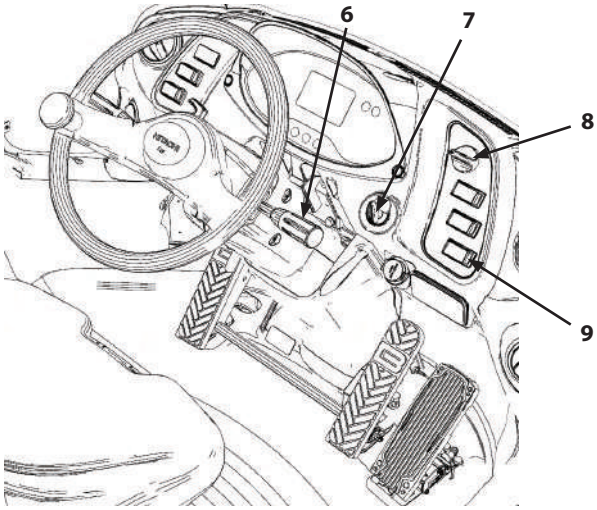

MNTL-01-043-15 ja

Parking Brake Switch

WARNING

- **Always engage the parking brake when parking or leaving the machine to prevent accidents caused by the machine running away.**
- **Except in emergency, do not engage the parking brake while driving.**
- **Engage the parking brake after stopping the machine.**
- **Engaging it while driving is dangerous due to the sudden deceleration. It also causes premature wear and/or damage to the parking brake. When the parking brake has been engaged in an emergency while driving, contact Authorized Dealer to inspect the parking brake.**
- **If there is residual pressure in the accumulator when the engine is stopped, the parking brake can be released.**
- **If the parking brake is released with the engine stopped on a slope, the machine will start descending immediately.**
  In the interest of safety, only release the parking brake when the engine is operating.

When parking brake (1) is put in its ON position, it activates the parking brake and lights the parking brake indicator (2).
To release it, press the OFF side of parking brake switch (1). Press the switch so it clicks twice and make sure parking brake indicator (2) goes OFF.

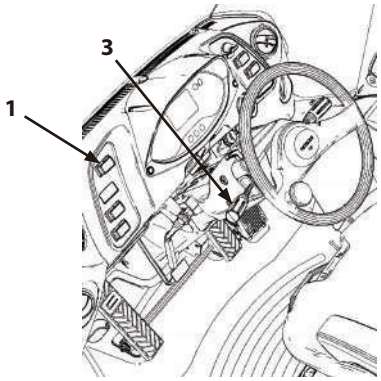

MNTL-01-044-4 ja

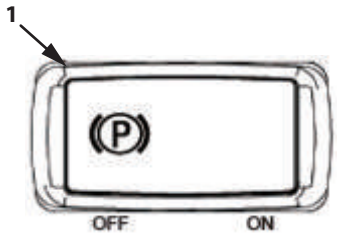

MNUD-01-146-1 ja

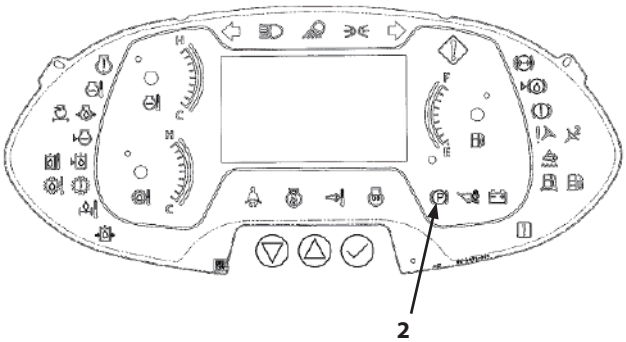

MNUD-01-030-8 ja

NOTE

- *In the interest of safety, the machine does not move when the parking brake is engaged, even if Forward/ Reverse lever (3) is in forward (F) or reverse (R).*
- *In the interest of safety, the parking brake operates when the engine stops, even if parking brake switch (1) is in the OFF position.*
  To restart the engine, make sure Forward/Reverse lever (3) and Forward/Reverse switch (4) are in neutral (N).
- *The parking brake engages when the key is turned OFF.*

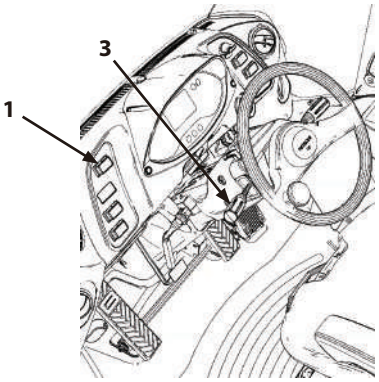

MNTL-01-044-4 ja

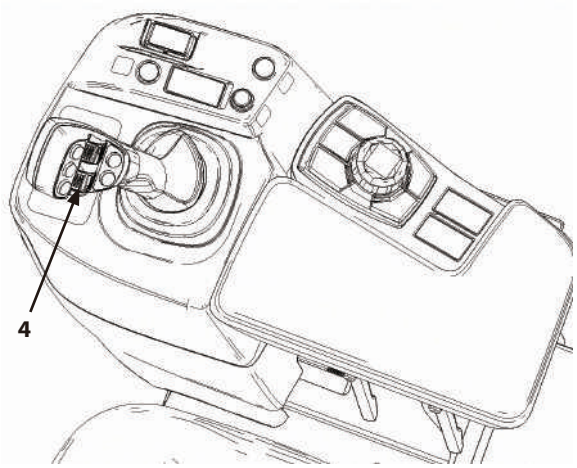

MNTL-01-054-1 ja

Work Light Switch

Pressing the side of switch (1) when the light switch is on or , turns on front work lights (2).
Rear work lights (3) do not turn ON.

When the side of switch (1) is pressed, the front (2) and rear (3) work lights turn ON.

CAUTION

Do not turn on the work lights when driving on a public road.

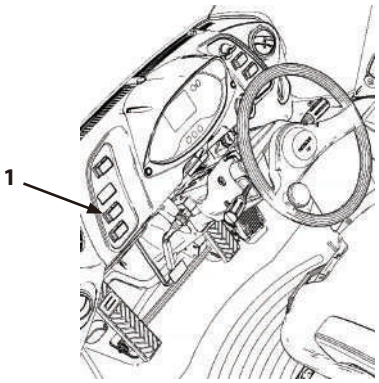

MNTL-01-044-5 ja

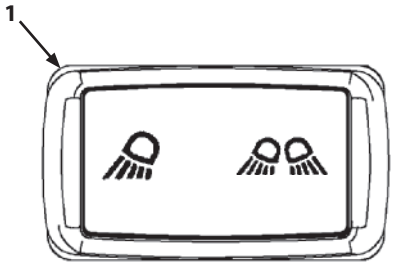

MNUD-01-081-1 ja

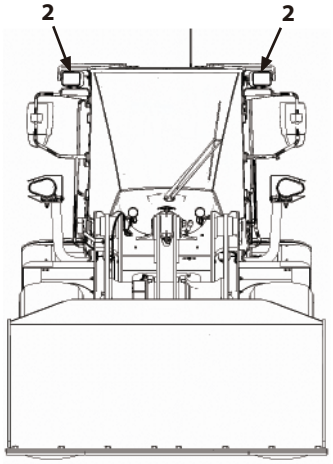

MNTL-01-055-1 ja

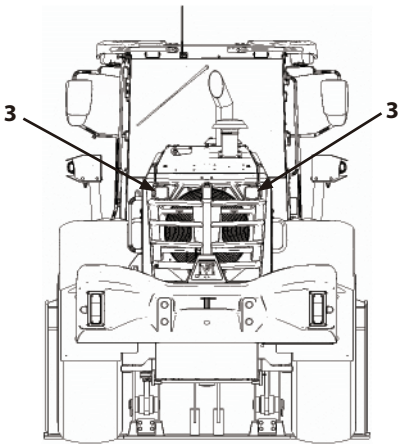

MNTL-01-056-1 ja

Hazard Switch

IMPORTANT

Do not leave hazard switch (1) on the ⚠ side with the engine stopped, as doing so discharges the battery.

Use this switch when the machine has a malfunction to let other vehicles know it has an emergency.

Pressing hazard lamp switch (1) to the ⚠ side makes the left, right, front and rear direction indicator lights/hazard lamps (2) flash. To turn them off, press the opposite side of hazard lamp switch (1).

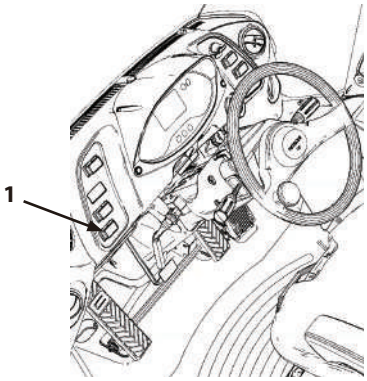

MNTL-01-044-6 ja

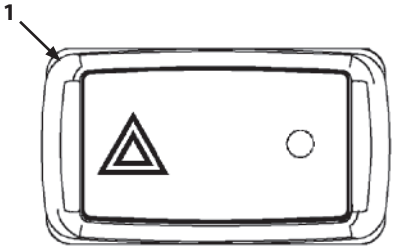

MNUD-01-135-1 ja

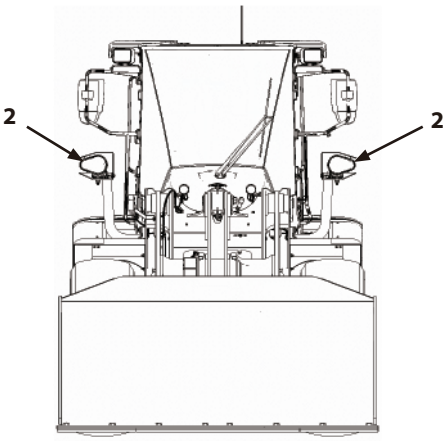

MNTL-01-055-2 ja

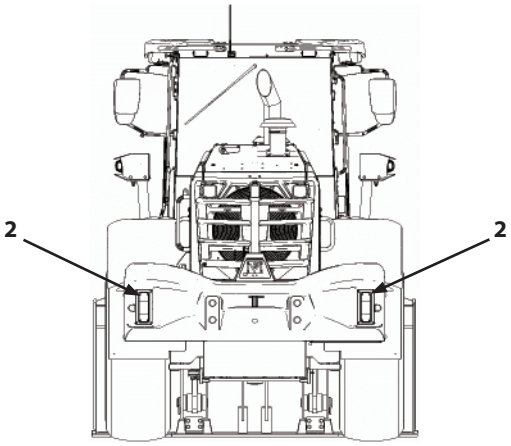

MNTL-01-056-2 ja

Shift Switch

Simply turn shift switch (1) to any position to change gears.

Forward	Reverse
1-4	1-4

Select the best shift position for the work involved.

IMPORTANT

When driving at high speed, (3rd or 4th gear), if shift switch (1) is switched, the HST error lamp may blink and the buzzer sound continuously (shift change warning). If the HST error lamp flashes and the buzzer sounds, decelerate by depressing the brake pedal to a speed appropriate to the selected gear.

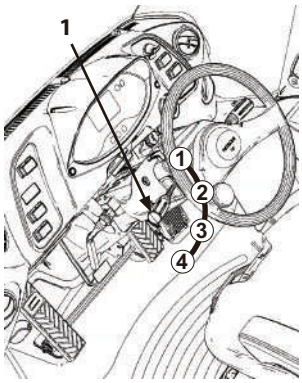

MNTL-01-044-7 ja

Horn Switch

Press horn switch (1) to sound the horn.
To make it easy to use during work, there is also a horn switch on the front attachment control lever.

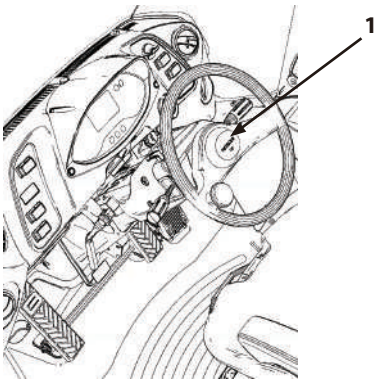

MNTL-01-044-8 ja

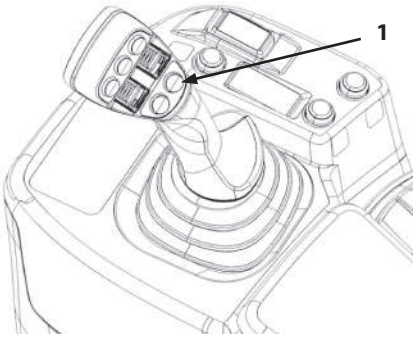

MNUD-05-004-2 ja

Light Switch

Light switch (1) has 2 levels and it turns the various equipment ON (☼) or OFF (✕), as below, depending on the level.

2- Headlight
3- Turn Signal, Hazard Light, Clearance Light
4- Turn Signal, Hazard Light
5- Brake Light, Tail Light
6- License Plate Light

Light Switch Position	Head-light	Clear-ance light	Tail Light	License Plate Light	Monitor Panel Light
OFF	✕	✕	✕	✕	✕
	✕	☼	☼	☼	☼
	☼	☼	☼	☼	☼

NOTE

When the light switch is in the position, the lights stay ON, even if the key switch is turned OFF. They can be used as parking lights, such as on public roads.
If the light switch is in any position other than OFF when the key switch is turned OFF, the buzzer sounds for about 10 seconds to remind the operator to turn them OFF. The buzzer stops sounding when the light switch or the key switch is turned OFF.

IMPORTANT

Do not use the lights above for a long time with the engine stopped, as doing so will discharge the battery.

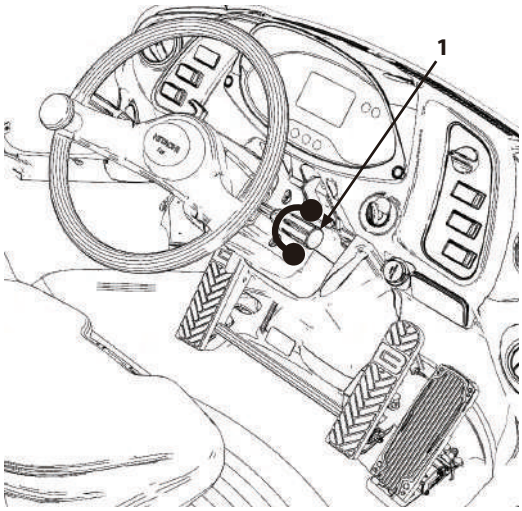

MNTL-01-043-3 ja

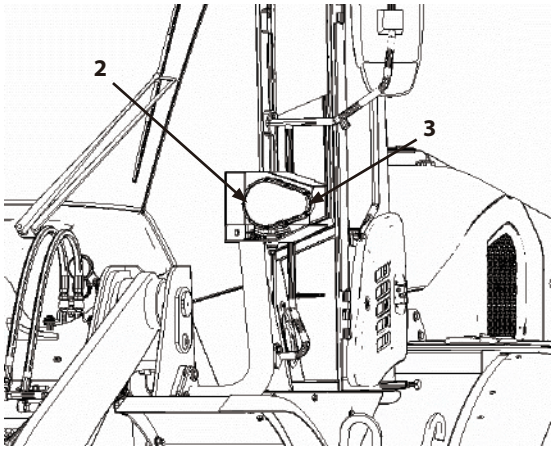

MNTL-01-057-1 ja

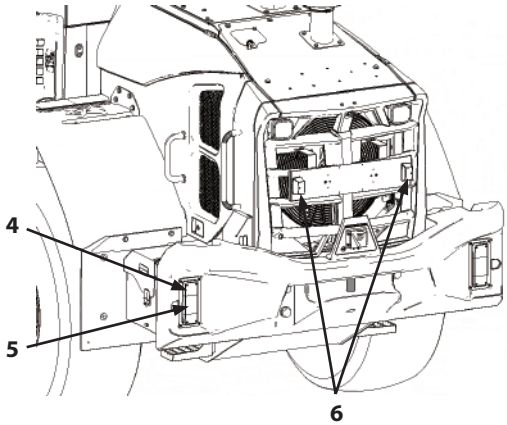

MNTL-01-058-1 ja

High-Low Beam Switch

The high-low beam switch raises and lowers the headlights.

CAUTION

When oncoming vehicles are close or when overtaking others, drive with the headlights in the low beam position.

When the headlights are ON, lowering the turn signal lever (1) shifts them to high beam and makes the high beam indicator (2) light. Raising turn signal lever (1) shifts the headlights to low beam and turns the high beam indicator (2) OFF.

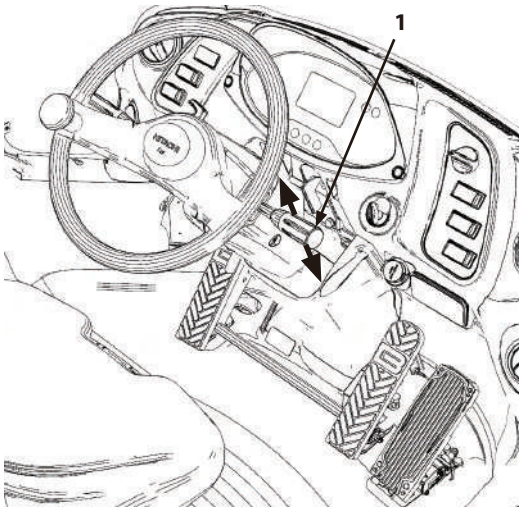

MNTL-01-043-4 ja

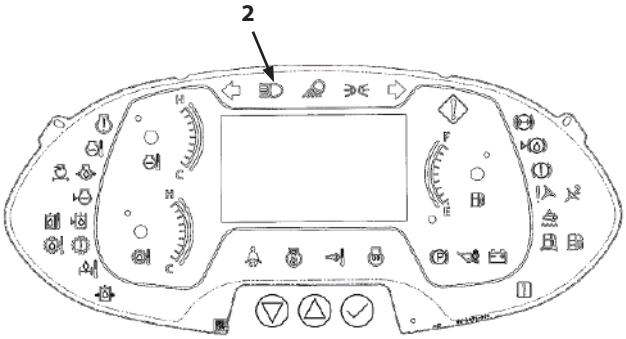

MNUD-01-030-9 ja

Key Switch

WARNING

When starting the engine, put the Forward/Reverse lever and Forward/Reverse switch in neutral (N), engage the parking brake, lock the neutral lever lock and lock the front attachment control lever. For details, refer to the section Starting and Stopping the Engine.

WARNING

Do not turn off key switch (1) while driving. Doing so makes both the steering and braking inoperable.

A- OFF (Engine Off)
B- ACC (Radio)
C- ON (Power On)
D- START (Engine Start)

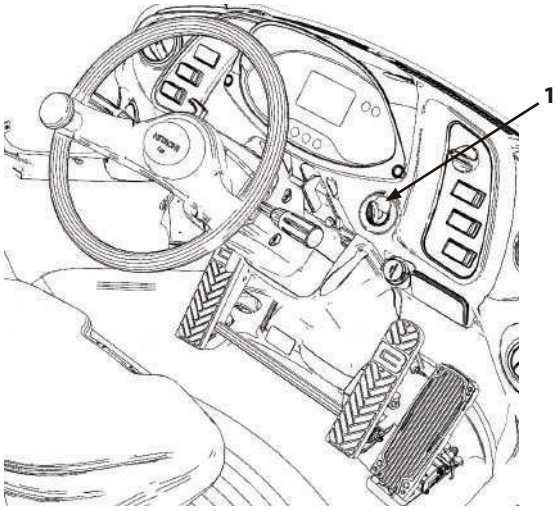

MNTL-01-043-5 ja

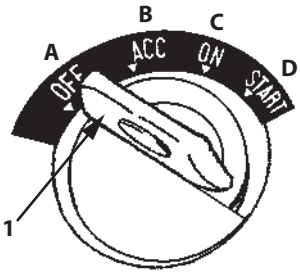

MNTL-01-094-3 ja

1st Speed Limit Switch

When shift switch (1) is in 1st, a maximum travel speed can be selected from the range of 0 km/h to 13 km/h by operating the 1st speed limit switch (2).

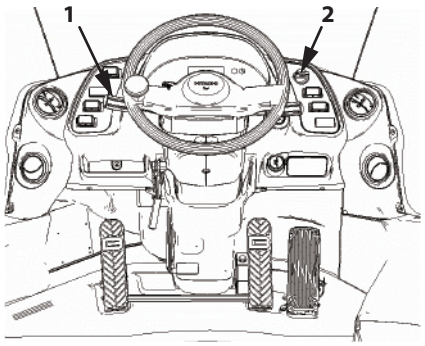

MNTL-01-089-1 ja

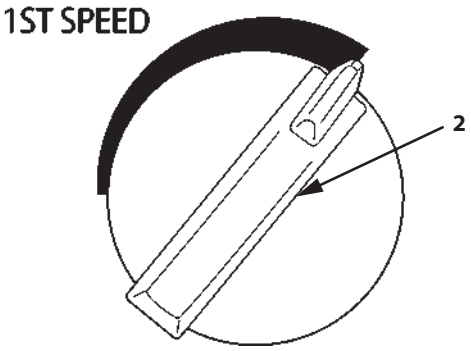

MNDF-01-019-1 ja

Emergency Steering Operation Check Switch
(Machine Equipped with Emergency Steering System)

Emergency steering operation check switch (1) is for checking whether the emergency steering pump works. While switch (1) is pressed to the ON side, the emergency steering pump operates and secondary steering indicator (2) comes ON.
Once emergency steering pump operation is confirmed, let go of the switch. Switch (1) returns to OFF.

IMPORTANT

Only check pump operation for 1 to 2 seconds as it draws a great deal of electricity.

NOTE

The emergency steering system is checked automatically for about 1 to 2 seconds when the engine is started. The pump can be heard operating during that time.

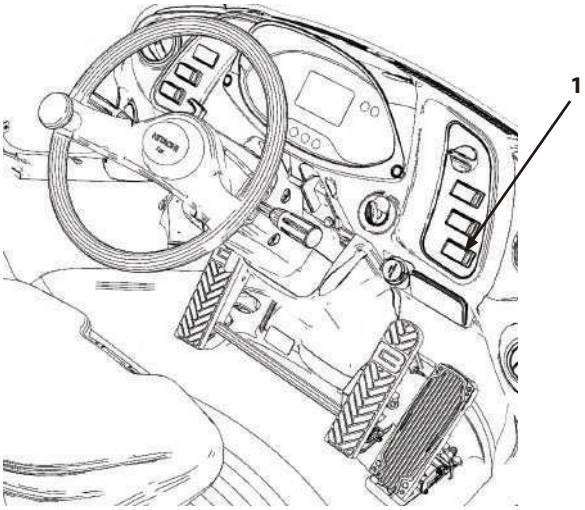

MNTL-01-043-6 ja

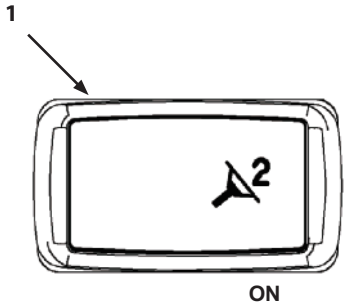

MNUD-01-058-1 ja

MNUD-01-030-10 ja

Right Console and Control Lever Switches (Illustration Contents)

The names and layout of switches on the right console and front attachment control lever of the operator's station are shown below. For details, refer to the page in the parentheses ( ).

1- Control Lever Lock Switch (1-153)
2- Forward/Reverse Switch (4-6)
3- Not Used
4- Quick Wiper (1-154)
5- Sub Monitor Controller (1-155)
6- Quick Coupler Switch (Optional) (1-157)(13-1)
7- Quick Power Switch (1-156)
8- Not Used
9- Horn Switch (1-146)
10- 3rd Spool Control Switch (Optional) (1-158)
11- 4th Spool Control Switch (Optional) (1-158)

NOTE

For information on payload checker switches, refer to "Function Button Switches" on page (5-22).

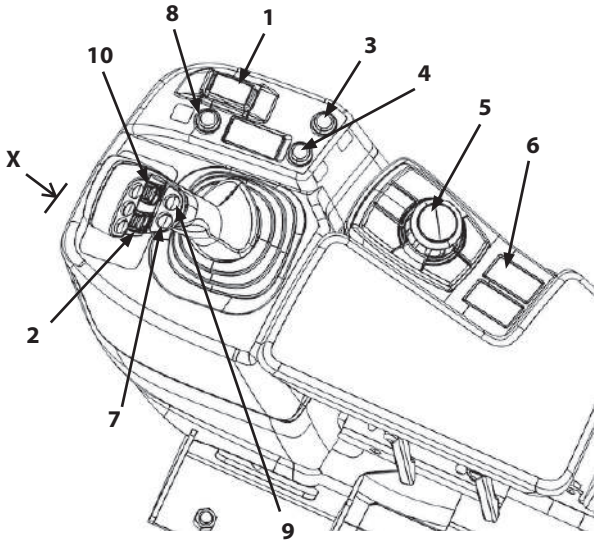

MNUD-01-028-2 ja

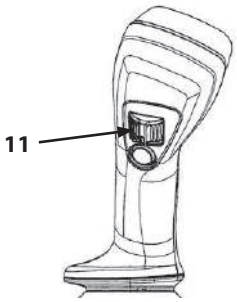

Arrow X

MNUD-05-002-1 ja

Control Lever Lock Switch

WARNING

- **Before leaving the operator's station, always stop the engine and put control lever lock switch (1) in the lock (🔒) position.**
- **Put control lever lock switch (1) in the lock (🔒) position at the end of work or for transport. For details on control lever lock switch (1), refer to "Control Lever Lock" on page (5-2).**

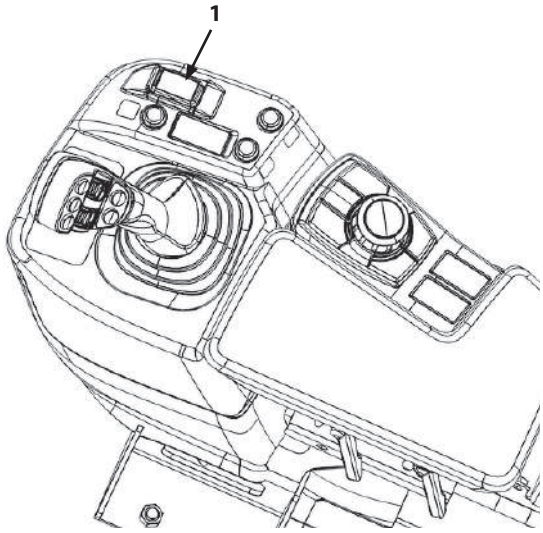

MNUD-01-028-3 ja

Control lever lock switch (1) is designed to prevent accidental operation from inadvertently touching the lever when getting on/off the machine. The front attachment control lever becomes operable by pressing Unlock (🔓) on control lever lock switch (1).

NOTE

If Unlock (🔓) on control lever lock switch (1) is pressed while the control lever is in an operating position, the lever does not function. Put the control lever back in neutral and then operate the lever.

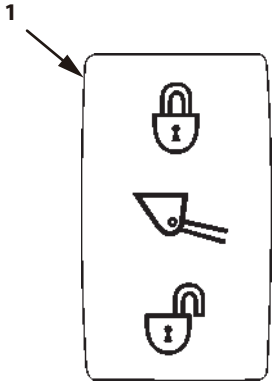

MNEC-01-015-2 ja

IMPORTANT

After starting the engine, the pilot pressure supply is interrupted, regardless of whether control lever lock switch is ON or OFF, in order to check the function of the control lever lock. If the engine is started and the control lever lock switch is pressed from ON to OFF, with the control lever in an operating position, loading operations cannot be performed. Put the control lever back in neutral for a moment and then operate the lever.

NOTE

When control lever lock switch (1) is in the Lock (🔒) position, the ride control function is disabled.

Quick Wiper

Front wiper operates slowly as long as quick wiper (1) is pressed down.
Once quick wiper (1) is released, the wiper returns to its home position.

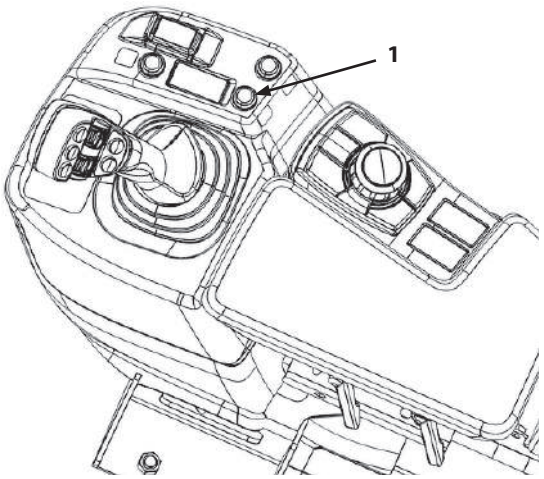

MNUD-01-028-5 ja

Sub Monitor Controller

Controller (1) is used to operate the sub monitor (2) screen. For details on operating and setting for the sub monitor (2), refer to “Sub Monitor Controller” on page (1-60).

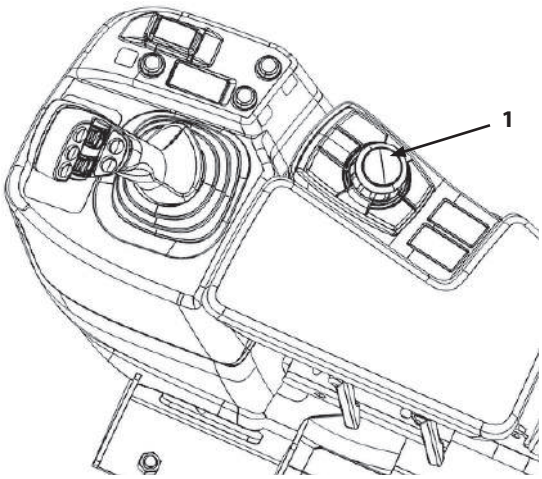

MNUD-01-028-6 ja

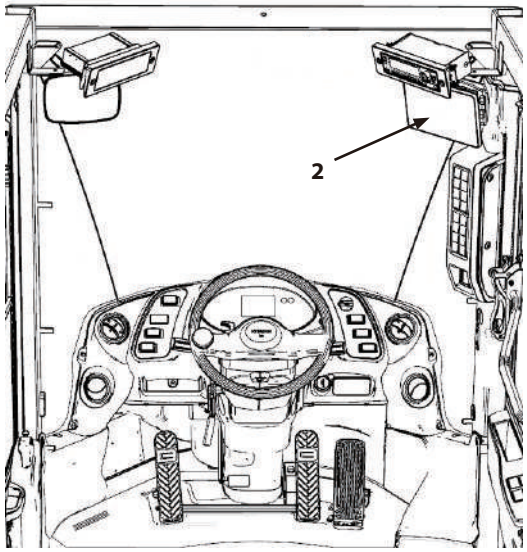

MNTL-01-041-5 ja

Quick Power Switch

When power mode switch (3) on switch panel (2) is OFF and quick power switch (1) is pressed, it switches into the power mode temporarily.
The LED in the middle of power mode switch (3) lights.

NOTE

The quick power switch is effective in the following situations.

- *When an extra push (equivalent to power mode) of traction is desired while excavating.*
- *When a bit more acceleration or travel speed (equivalent to power mode) is desired while climbing.*

When driving with a light load, or with the Forward/Reverse lever in N (neutral), it does not switch into the power mode, even if the quick power switch is pressed. The switch is disabled.

In addition, after quick power switch (1) puts the machine into power mode, if any of the following conditions apply, the power mode is cancelled.

- If driving load decreases while excavating
- If quick power switch (1) is pressed
- If Forward/Reverse lever or Forward/Reverse switch is put in neutral (N)
- If Forward/Reverse lever or Forward/Reverse switch is shifted
- When driving on a level surface

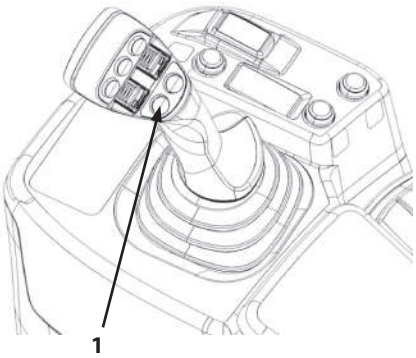

MNUD-05-004-1 ja

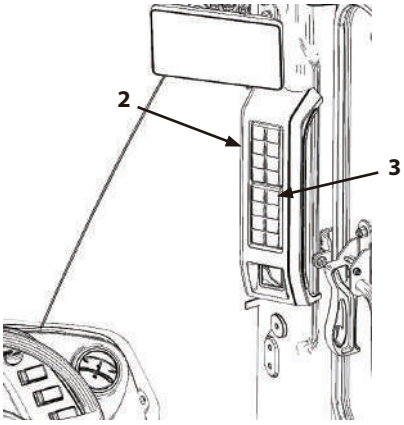

MNTL-01-039-5 ja

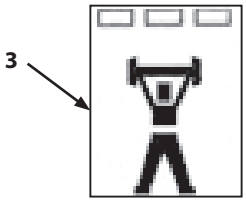

MNUD-01-212-3 ja

	Pilot Lamp	
	■ ■ ■	■ □ ■
P Mode	OFF	ON

□: LED ON

■: LED OFF

Quick Coupler Switch (ZW140-7, 160-7)(Optional)

The quick coupler system simplifies the task of switching between the loader bucket attachment and other attachments.
Quick coupler switch (optional) (1) operates the coupler cylinder and locks/unlocks the lock pin.
For how to operate quick coupler switch (1), refer to “Using the Quick Coupler (Hydraulic)” on page (13-1).

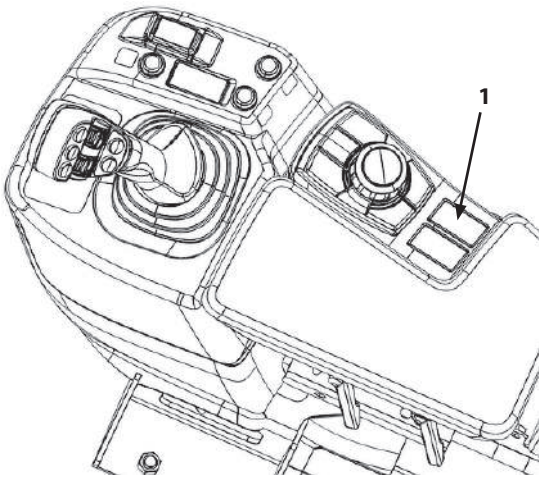

MNUD-01-028-7 ja

3rd/4th Spool Control Switch (Optional)

The front attachment is operated with 3rd spool control switch (1) and 4th spool control switch (2).

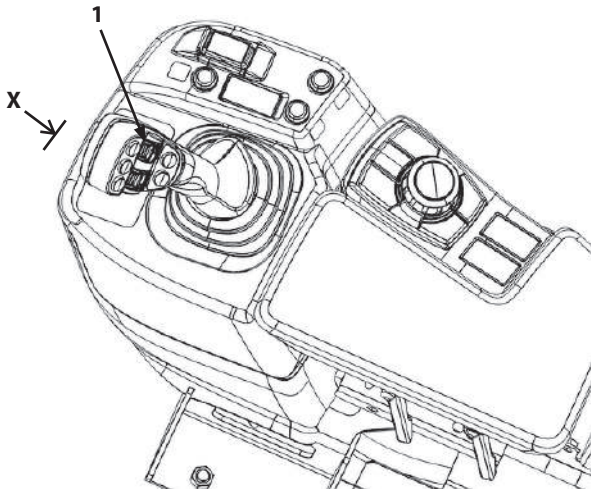

MNUD-01-028-8 ja

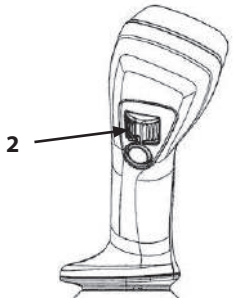

Arrow X

MNUD-05-002-2 ja

Armrest Adjustment

Armrest (1) is for resting one's arm while operating the front attachment control lever, and eases the work. Move armrest (1) to adjust it to a comfortable, easy-to-use position.

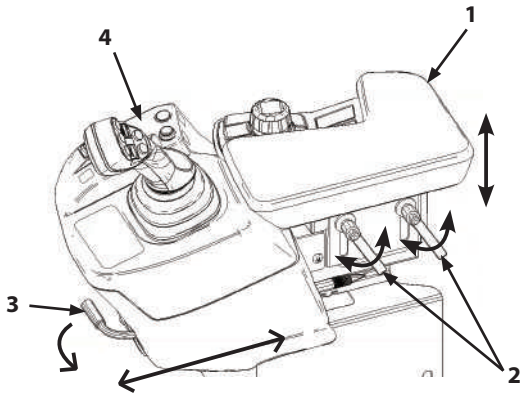

MNTL-01-061-1 ja

Height Adjustment

Turn handles (2) to loosen them, then adjust the height of the armrest to the operator's preference. After adjusting it, turn handles (2) to tighten them and fix the armrest height.

Height adjustment range: 50 mm

NOTE

Handles (2) are locked so they do not turn unintentionally. The positions (angle) of handles (2) can be changed by pulling out and unlocking them. After adjusting them, push handles (2) in and lock them in position.

Fore-Aft Adjustment

Hold the armrest with your right hand while turning lever (3) clockwise with your left. Then move right console (4) fore or aft. Stop the console in the desired position and return lever (3) to its original position to lock it.

Fore-aft adjustment range: 90 mm

Front Attachment Control Lever

Multi-Function Joystick Lever

The multi-function joystick lever operates the lift arm and bucket.

Lever Position	Lift Arm, Bucket Operation
C	Float: The lift arm descends freely and once on the ground, floats along in response to external forces.
B	Lift arm down
N	Neutral: Lift arm and bucket remain in the positions where they stopped.
A	Lift arm up
F	Detent: Lift arm held in raised position.
G	Tilt Detent: Bucket held in tilted position.
D	Bucket Tilt: Bucket is tilted back, into a transport position.
E	Bucket Dump: Bucket is tilted forward to dump its load.
H	Dump Detent: Bucket held in dump position.

NOTE

The feel of the multi-function joystick lever becomes somewhat heavy when it is put in the float position (C) or detent positions (F),(G) or (H). If the lever is released, it returns automatically to the neutral (N) position automatically, but the lift arm/bucket continues moving and stops in the configured position.

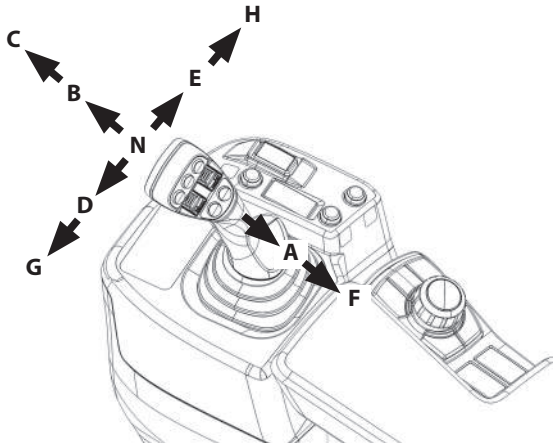

MNUD-01-099-2 ja

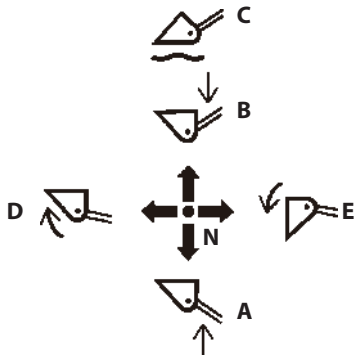

M4GB-01-074-1 ja

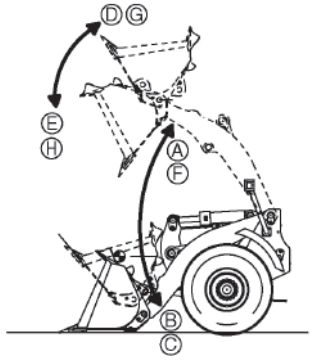

MNUD-05-005 ja

Multi-Function Control with 3rd/4th Spools

The control can be equipped with control switches for 3rd and 4th spools for operating attachments.

1- Control Lever
2- 3rd Spool Control Switch (Optional)
3- 4th Spool Control Switch (Optional)

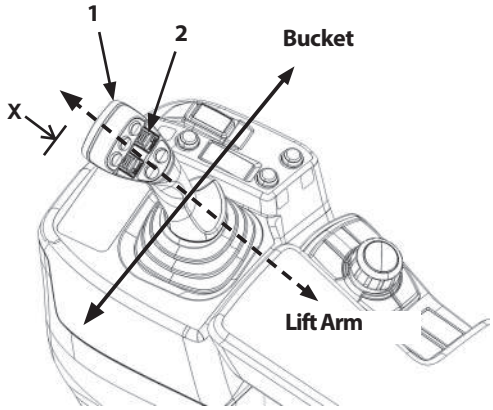

MNUD-01-099-3 en_GB

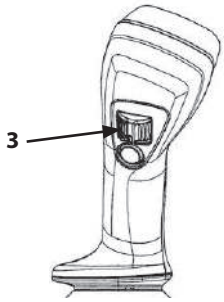

Arrow X

MNUD-05-002-3 ja

Operator's Station Equipment

24 V Power Supply Socket

WARNING

- **Do not power anything other than a genuine Hitachi Construction Machinery electrical device.**

IMPORTANT

- **Power supply socket (2) can be used as a DC 24 V external power supply. It is rated to 5 A (120 W). Never connect accessories that use power other than 24 V. Damage to the batteries and/or accessories may result.**
- **Do not use electricity for a long time with the engine stopped. Doing so may discharge the batteries.**

1. Insert key (1) into the key switch and turn to the ON position.
2. Open the socket cap and plug an accessory into socket (2).
3. Close the socket cap after use.

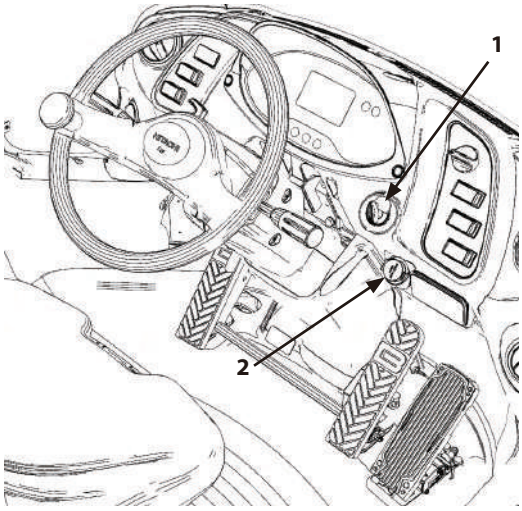

MNTL-01-043-7 ja

MNTL-01-094-1 ja

Rear Tray

1- Document Holder
2- Glove Compartment (Air Conditioner Cooled/Heated Box)
3- External Power Supply (Optional)
4- Tray
5- Fuse Box
6- Cup Holder

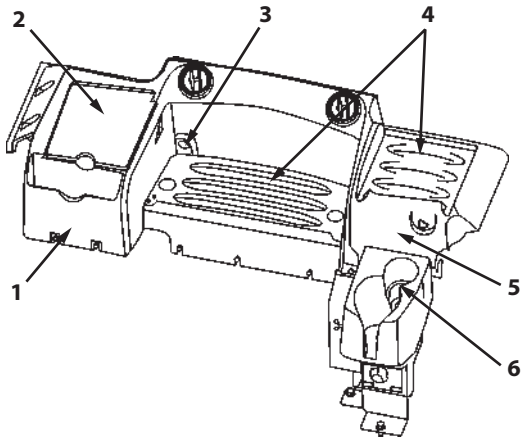

MNEC-01-046-1 ja

External Power Supply (12 V)

External power supply (3) can be used as a DC 12 V power supply. It is rated to 5 A (60 W). Use it to power things like lights used during inspections and maintenance.

IMPORTANT

Never connect accessories that use power other than 12 V. Damage to the batteries and/or accessories may result. Do not supply power to accessories for a long time without running the engine. Doing so discharges the battery.

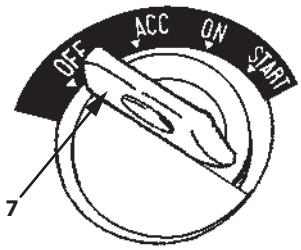

MNTL-01-094-4 ja

1. Take off the cover.
2. Plug the socket of the accessory to be used into the port of the external power supply.
3. Turn key switch (7) to the ON position. Power is supplied to the connected accessory.
4. After use, unplug the accessory and put the cover back in place.

Glove Compartment (Air Conditioner Cooled/Heated Box)

Glove compartment (air conditioner cooled/heated box) (1) uses cool/hot air from the AC for storing things like drinks temporarily.
Use containers with a tight cap or cover inside the box.

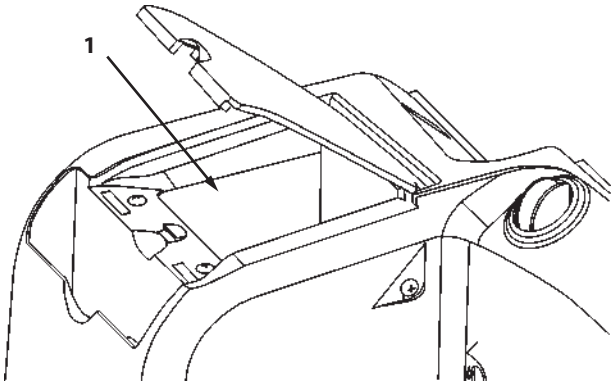

MNEC-01-048-1 ja

Tray and Drink Holder

IMPORTANT

Tray (2) is not waterproof. Avoid spilling any liquids on it.
Only put bottles with a cap or lid in drink holder (3).

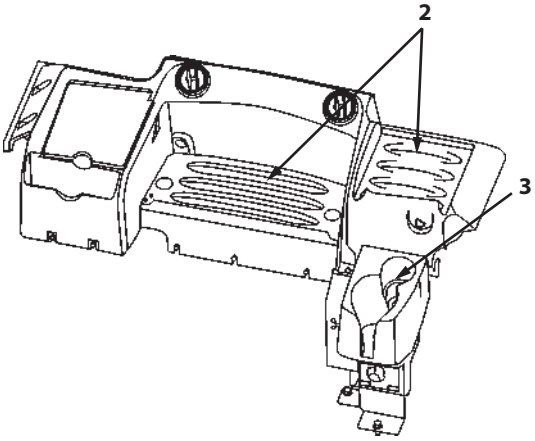

MNEC-01-046-2 ja

USB Power Supply

Use USB power supply (1) for operating and/or charging compatible electronic devices, such as mobile phones.

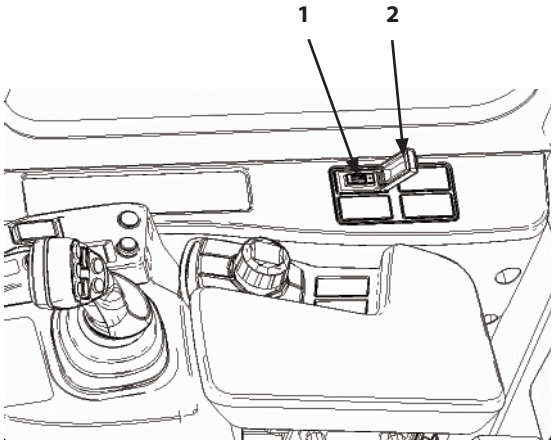

MNTL-01-062-1 ja

IMPORTANT

- **The machine's USB power supply can be used up to DC 5V. Its rated capacity is 5 V, 2 A.**
  If a device that exceeds the rated capacity is plugged in, it activates a protective function, which may result in failure to charge or operate the device.
- **USB devices with the A type of terminal can be used. Devices with incompatible terminals may not operate or be charge, and/or may cause damage.**
- **It only acts as a power supply and cannot be used for data transfer or communication.**
- **A special cable may be required to connect some devices. Use such a cable as required.**
- **Do not use for a long time with the engine stopped. Doing so will drain the battery. Unplug the device as soon as charging is complete.**
- **As it is not waterproof, keep water and other liquids away from it.**
- **Take all due care as product warranty does not cover damage to connected devices, nor loss or corruption of data.**
- **Never connect a broken device. Smoke and/or fire may result.**
- **Never insert foreign objects, especially metal ones, into the USB terminals. Electrical shock and/or damage may result.**
- **Be careful of connected cables. Tripping over them may result in injury and/or damage to the device.**

How to Use

1. Open cap (2) of USB power supply (1).
2. Connect the USB connector of the device.
3. Turn the key switch to the ON position. The USB can then be used.
4. After use, disconnect the USB connector of the device and close cap (2) of USB power supply (1).

NOTE

The radio also has a USB port. For information on the USB port of the radio, refer to "Control Panel" on page (1-180).

Adjusting the Operator's Seat

CAUTION

Adjust the seat to a position from which all pedals, levers and switches can be operated readily. Adjust the seat while the machine is parked.

Name of Components

1- Height and Weight Adjustment
2- Damper Adjustment
3- Fore-Aft Adjustment
4- Seat Tilt Adjustment
5- Seat Depth Adjustment
6- Armrest
7- Armrest Angle Adjustment
8- Reclining Angle Adjustment
9- Lumbar Support
10- Headrest
11- Seat Heater Switch
12- Fore-Aft Suspension

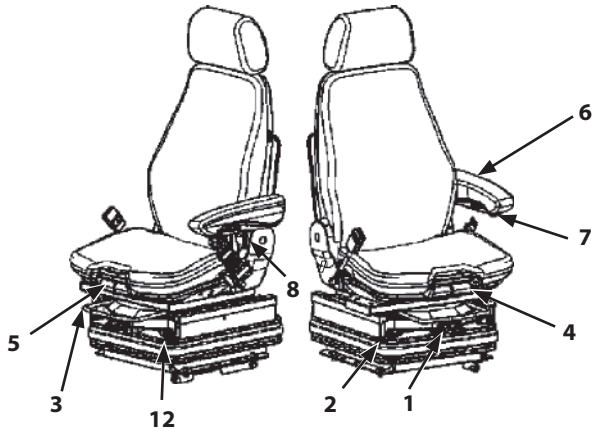

MPD8-01-296-1 ja

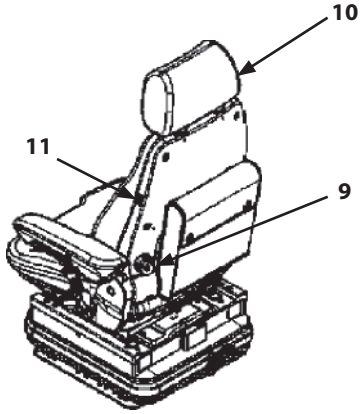

MPD8-01-295-1 ja

1. Height and Weight Adjustment

IMPORTANT

Before pulling on lever (1), put damper adjustment lever (2) in the soft position.

Lift lever (1) slightly to automatically adjust to the appropriate range for the operator's weight.

IMPORTANT

Do not operate lever (1) for more than 1 minute. Failure to do so may damage the machine.

2. Damper Adjustment

   The stiffness of the damper can be adjusted to suit the work and road conditions.

   A : Hard

   B : Soft

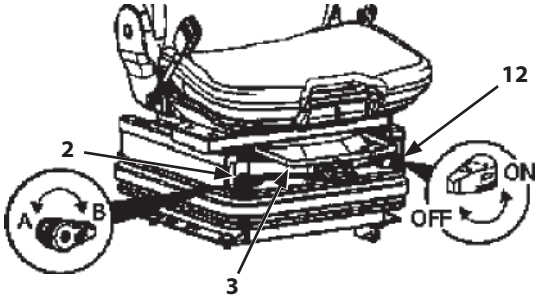

MPD8-01-297-1 ja

3. Fore-Aft Adjustment

   The seat can be adjusted forward or backward. Lift up slide lever (3) and slide the seat to adjust it within the range of 210 mm, in 10 mm increments. Release the lever when in the desired position and then make sure the seat is locked and does not move.

   NOTE

   When fore-aft suspension (12) is set to the ON side, the seat assembly may move slightly fore/aft while driving to absorb shock.

4. Seat Tilt Adjustment

   The angle of the seat surface can be changed. Lift up lever (4) at the front of the seat and press down or release the seat to adjust the angle in the range of 3° to 11° in 4 increments.

   A : 3 °

   B : 2.5 °

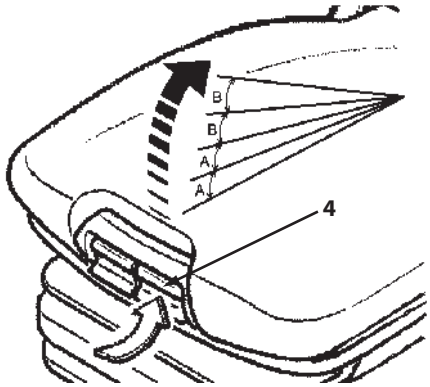

M4GB-01-093-1 ja

5. Seat Depth Adjustment

   The depth (fore/aft) of the seat surface can be changed. Lift up lever (5) and slide the seat surface fore or aft to adjust it within the range of 60 mm, in 15 mm increments.

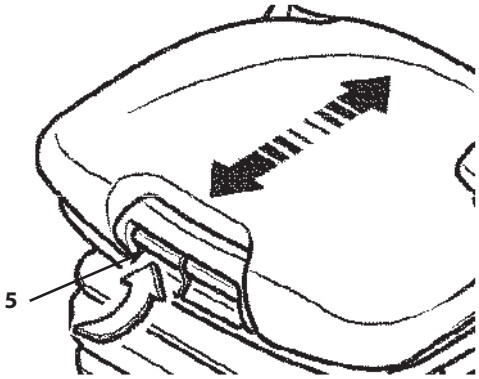

M4GB-01-094-1 ja

6. Armrest

   The armrest can be moved. It can be kept upright when not needed.

7. Armrest Angle Adjustment

   Turn knob (7) to adjust the angle of the armrest.

   A : Raise

   B : Lower

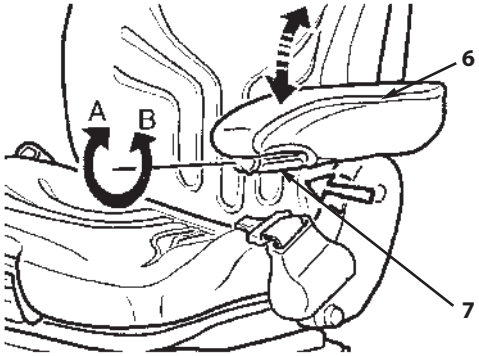

M4GB-01-095-1 ja

8. Reclining Angle Adjustment

   Lift up adjustment lever (8) to adjust the angle of the seat back, from 10° forward to reclining 34°, in 2° increments. Return the adjustment lever to its original position with the seat back as desired to lock it and make sure it does not move.

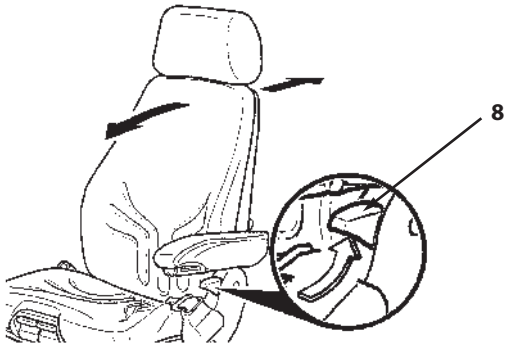

M4GB-01-096-1 ja

9. Lumbar Support Adjustment

   The bulging part of the backrest that touches the lumbar can be adjusted. Turn knob (9) either right or left to adjust the lumbar support to the desired position.

   NOTE

   - *The knob can be adjust in either direction.*
   - *Continuing to turn the knob cycles through bulging→flat→bulging, etc.*

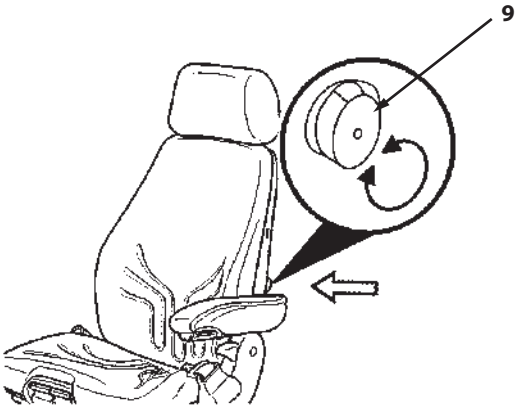

M4GB-01-097-1 ja

10. Headrest

    Adjust the headrest by lifting it up or pushing it down so it matches the height of your head. The height of the headrest can be adjusted within a range of 100 mm. The headrest can also be adjusted fore/aft so it touches your head within a range of 49°.
    To remove the headrest, lift it all the way up and off.

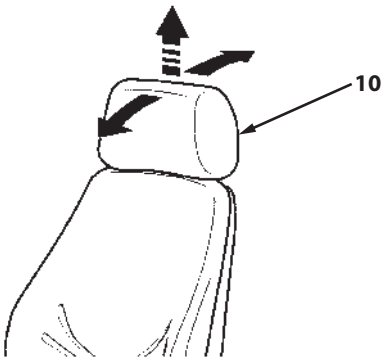

M4GB-01-099-2 ja

11. Seat Heater Switch (Option)

Seat heater switch (11) on the backrest can be set to ON or OFF.

○ : OFF

| : ON

When seat heater switch (11) is turned ON, the seat and backrest are heated to warm them up.
When the temperature of the seat and/or backrest reaches its specified temperature, heating turns off automatically.

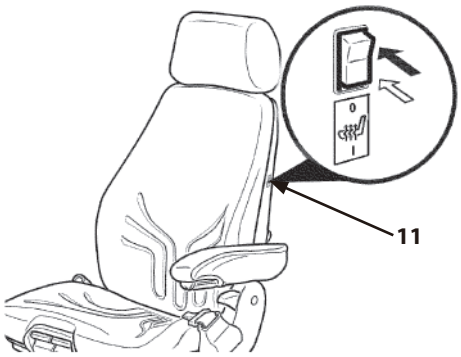

M4GB-01-098-2 ja

WARNING

- **Beware of electrical shock.**
  - **Take care in handling water and drinks.**
  - **Do not use if your clothes are soaked.**
  - **Do not place anything heavy with parts that stick out on the seat, or pierce the seat with a sharp object.**

CAUTION

- **Due to potential for low temperature burns, the following people should be careful when using it.**
  - **People with fragile skin**
  - **People who are very tired**
  - **Anyone who is drowsy, such as due to drinking or medication (sleeping pills, cough medicine, etc.)**
- **Be aware of risk from abnormal heating or low temperature burns.**
  - **Do not use continuously for a long time.**
  - **Do not use with a heat-retaining material on it, such as a blanket or cushion.**

IMPORTANT

- **To avoid damage, do not place anything heavy with parts that stick out on the seat, or pierce the seat with a sharp object.**
- **If water or a drink is spilled, wipe it up with a soft cloth and dry thoroughly before using it again.**
- **If it seems abnormally hot, stop using it. Consult Authorized Dealer.**

NOTE

- *The position where temperature is detected varies with the seat type.*
- *The seat temperature may not drop immediately after switch (11) is turned OFF. Check the position of the switch carefully before operating the machine.*

Seat Belt

WARNING

- **Be sure to use seat belt (1) when operating the machine.**
- **Before operating the machine, be sure to examine seat belt (1) and the hardware attached for any failure. Replace the seat belt and the hardware attached if they are damaged and/ or worn.**
- **Replace seat belt (1) every 3 years, regardless of its appearance.**

1. Confirm that seat belt (1) is not twisted. Securely insert it into buckle (2). Lightly pull on the belt (1) to confirm that the buckle is latched securely.
2. Push button (3) on buckle (2) to unfasten seat belt (1).

Replace the seat belt if it is worn or damaged or if there is an accident that puts significant stress on the seat belt.

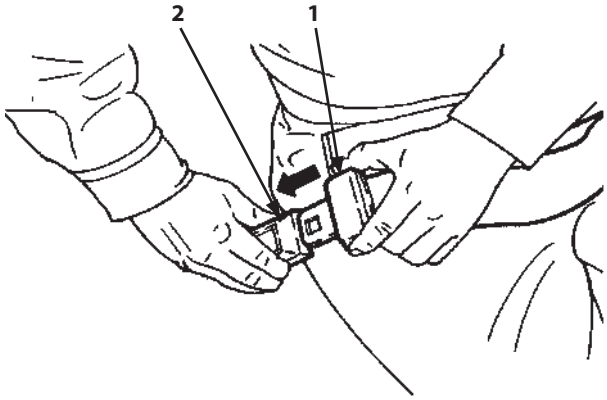

M1U1-01-031-1 ja

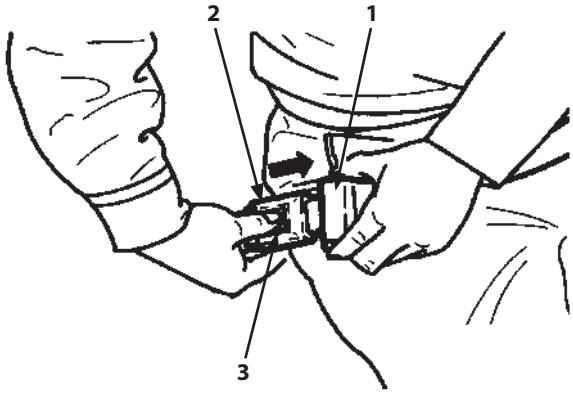

M1U1-01-032-1 ja

Seat Pocket

A pocket is provided on the back of the operator's seat. Keep the user's manual and other information in the pocket.

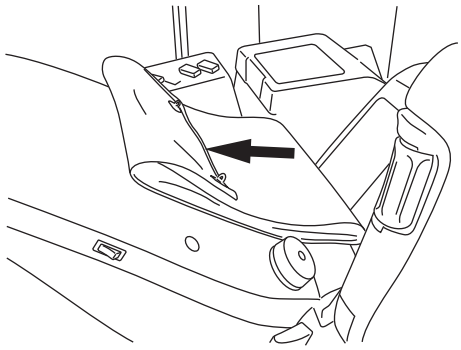

M4GB-01-139-1 ja

Auto Air Conditioner

Features

- Cab Temperature Control
  The system works automatically to maintain the cab temperature, as set with the temperature control switch, regardless of outside temperature or the sun. In addition, the fan speed and air vents and fresh air/ recirculating air are switched automatically in response to cab temperature.
- Max. Cooling and Heating
  Maximum cooling or heating can be selected by setting the temperature setting display to 18 °C (63°F) or 32 °C (91°F) with ∧ or ∨ on the temperature control switch.
- Heater Start-Operation Control System:
  In winter or in cold weather, when starting the engine, the engine coolant is cool and air temperature inside the cab is low. Until the coolant is warmed, when the front foot vent and/or foot vent is selected, the air flow level is fixed to the minimum setting and cool air is restricted from entering the cab.

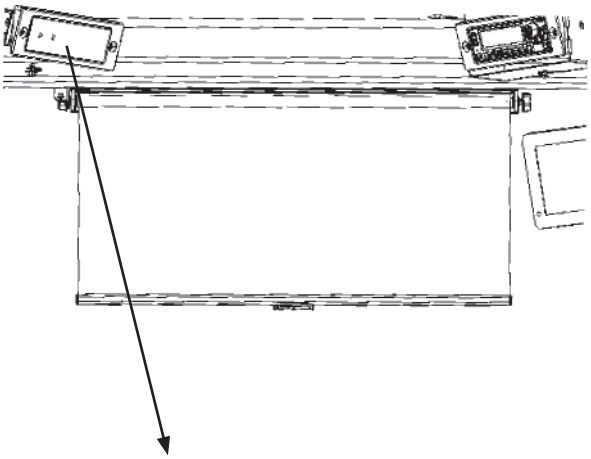

MNUD-01-142-1 ja

MNUD-01-150 ja

Name of Components

1- Control Panel
2- Front Vents
3- Rear Vent
4- Foot Vents
5- Defroster Vent
6- Power OFF Switch
7- Fan Switch
8- LCD Panel
9- Temperature Control Switch
10- Mode Switch
11- AUTO Switch
12- AC Compress ON/OFF Switch
13- Fresh/Recirculating Air Switch
14- Defroster Switch

NOTE

- *Apart from foot vents (4) and defroster vents (5), the direction air blows from the various vents can be changed with their louvers.*
- *Fogging of the windows can be reduced by adjusting the direction of vents to the sides and rear.*
- *Front and rear vents can be opened and closed manually.*

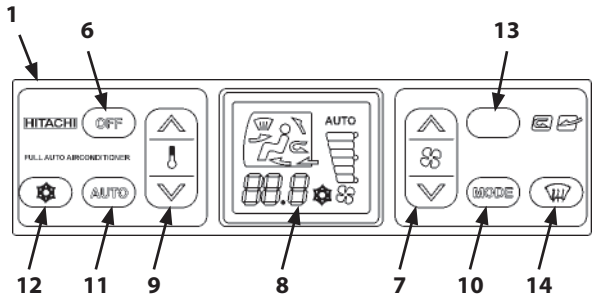

MNUD-01-150-1 ja

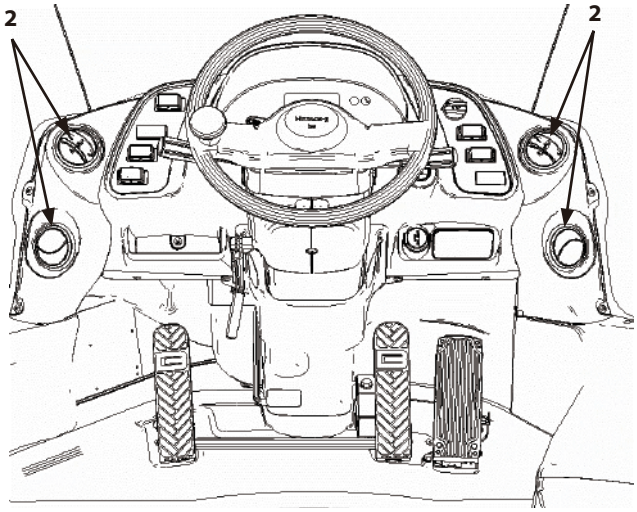

MNTL-01-063-1 ja

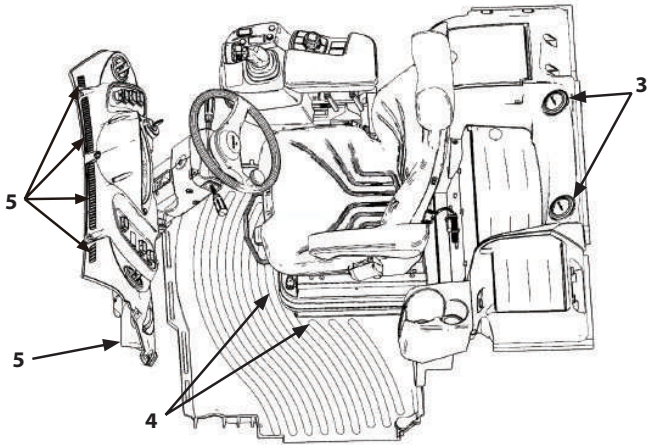

MNTL-01-040-2 ja

Control Name and Function

- Power OFF Switch (6)
  This switch stops the air conditioner.
  When the switch is pressed, the display of temperature setting and fan speed on LCD panel (8) turn OFF and ventilation stops both under manual and automatic operation.
- Fan Switch (7)
  Fan speed under manual operation can be adjusted from Lo to Hi in 6 stages. The fan speed is displayed on the right side of LCD panel (8).
- Increase Fan Speed
  Each time the up side ∧ of fan switch (7) is pressed, it increases the fan speed from weak to strong.
- Decrease Fan Speed
  Each time the down side ∨ of fan switch (7) is pressed, it decreases the fan speed from strong to weak.

NOTE

The fan speed is controlled automatically under AUTO operation. The indicator of the fan speed position flashes.

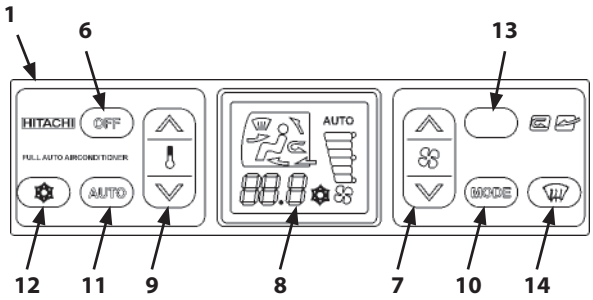

MNUD-01-150-1 ja

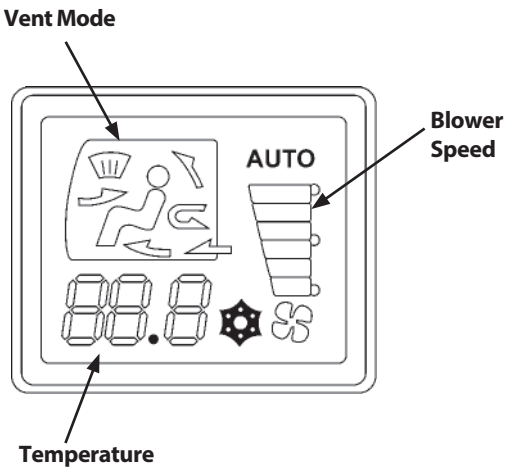

MNDB-01-035-1 en_GB

- LCD Panel (8)
  The panel displays the air conditioner temperature, fan speed and vent settings.

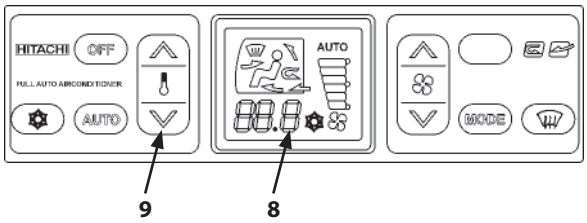

MNUD-01-150-2 ja

  - Temperature Display
    The temperature setting is displayed numerically (18.0 to 32.0 °C, 63 to 91°F) in the middle of the LCD panel. It is displayed in 0.5 °C (0.9 °F) increments.
  - Fan Speed Display
    The fan speed is displayed by lit segments (6 levels) on the right side of the panel.
  - Vent Display
    The selected vents are displayed at the top of the LCD panel.

    Vent:

	Front
	Front, Rear
	Front, Rear, Foot
	Foot
	Foot, Defroster
	Defroster

- Temperature Control Switch (9)
  This switch can set the temperature to 18.0 to 32.0°C (63 to 91°F) during manual and AUTO operation. The temperature can be adjusted in increments of 0.5 °C (0.9 °F).
  The temperature setting is displayed in the middle of LCD panel (8).
  - Increase Temperature
    Each press of the up side ∧ of temperature control switch (9) increases the temperature setting by 0.5 °C (0.9 °F) at a time.
  - Decrease Temperature
    Each press of the down side ∨ of temperature control switch (9) decreases the temperature setting by 0.5 °C (0.9 °F) at a time.
  - Temperature Setting Fahrenheit ⇔ Celsius Function
    The display of Fahrenheit and Celsius can be switched by pressing both ∧ and ∨ of the temperature control switch at the same time for 5 seconds or so while the fan is operating. (Note that the temperature unit is not displayed.

Unit	LCD Display
Celsius (°C)	18.0 to 32.0
Fahrenheit (°F)	63 to 91

Mode/Temperature Control Switch

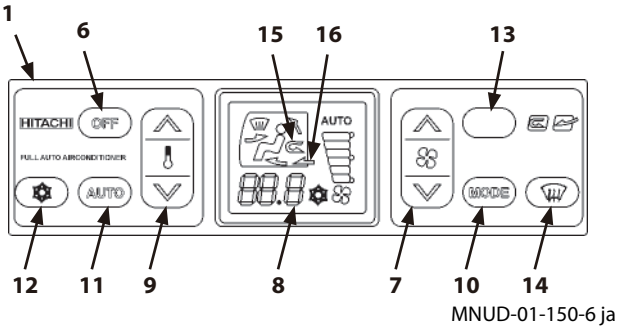

- Mode Switch (10)
  Selects the air vent. The air vent is displayed on LCD panel (8).

: Front

: Front, Rear

: Front, Rear, Foot

: Foot

: Foot, Defroster

: Defroster

Each time mode switch (10) is pressed, the vent mode can be changed in 6 stages as illustrated below.

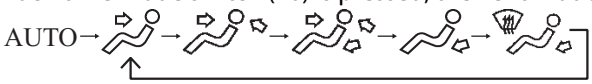

When defroster switch (14) is pressed, it switches to the defroster vents.

- AUTO Selected
  Air vents are selected automatically.

- AUTO Switch (11)

  The air conditioner has 2 operating modes, AUTO and manual.

  - AUTO Operation
    Press AUTO switch (11) to light the indicator and set the system to AUTO operation. The fan speed, air vents and fresh air/recirculating air are all switched automatically according to the temperature setting.
  - Manual Operation
    Press AUTO Switch (11). The indicator goes off and the system is set to manual mode. The fan speed, air vents and fresh air/recirculating air can all be switched as desired.

- AC Switch (12)
  Pressing AC switch (12) turns the air conditioner (cooler, dehumidifier) ON and its indicator lights.
- Fresh/Circulating Air Switch (13)
  Switches the air intake between circulating cab air and taking in outside air.
  When fresh/circulating air switch (13) is pressed, either circulating air (15) or fresh air (16) indicator lights.
- Defroster Switch (14)
  Press defroster switch (14) to switch to the defroster vents.

Defroster Operation

1. When defroster switch (14) is pressed, it switches to defroster vents and fresh air mode, and turns the AC compressor ON.
2. The temperature can be adjusted with temperature control switch (9).
3. The amount of air can be adjusted with fan switch (7).
4. Positioning of foot and defroster vents can be changed with mode switch (10).

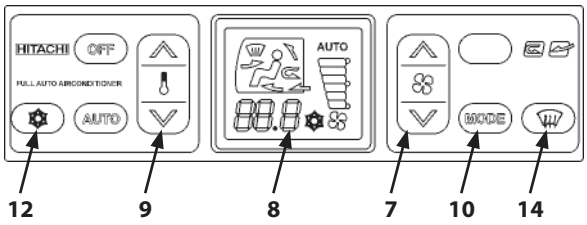

MNUD-01-150-4 ja

Cool Head/Warm Feet Mode

Cool and warm air are supplied at the same time to the head vents and feet vents, respectively.

1. Push Fan switch (7) to adjust the blower speed.
2. Press mode switch (10) to display on LCD panel (8).
   Turn the air conditioner on with AC switch (12).

Control air temperature inside the cab by using temperature control switch (9).

Tips for Optimal Air Conditioner Usage

For Rapid Cooling

When the cab is exposed to the hot sun in the summer, the temperature inside may exceed 80 °C (176°F). In this case, ventilate air in the cab first by opening the windows for rapid cooling.
After starting the engine, set the AC to maximum cooling (18°C, 65°F) with temperature control switch (9) and set to circulating air (15) with fresh/circulating air switch (13).

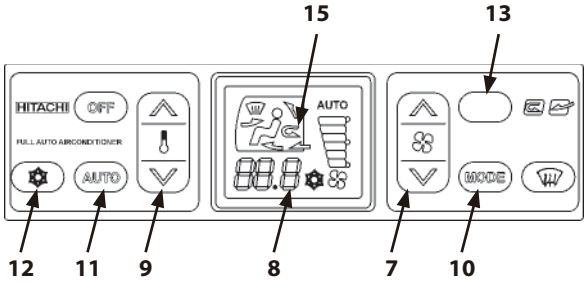

MNUD-01-150-5 ja

Select rear/front vents with mode switch (10) and use fan switch (7) to maximum blower speed (6 segments lit). Then turn AC switch (12) ON (indicator lights).
Increase engine speed slightly (1000 min^{-1} [rpm]) and operate with these settings for 2 to 3 minutes. Then turn AUTO switch (11) ON and close the windows. Once the temperature inside the cab drops, set to the preferred temperature with temperature control switch (9).

Defogging the Windows

When the inside of windows get fogged up due to high humidity inside the operator's station, such as during rainy weather, operate the AC to defog the windows.
Alternatively, if the AC is used excessively, the outside of the windows may fog up. In such case, stop the AC and allow the temperature inside the operator's station to adjust.

Off-Season Air Conditioner Maintenance

To prevent parts of the compressor from losing their lubricant during periods when the AC is not used, operate the AC at least once a month with the engine at slow idle speed.
In the winter when it is cold in the operator's station (15 °C, 59°F), the cooler may not operate. If this happens, warm the cab using the heater first.

IMPORTANT

- **Do not increase engine speed suddenly.**
- **Keep open flames away from the control panel.**
- **For how to service the filter, refer to the section "Maintaining the Air Conditioner."**
- **Always clean the auto air conditioner sensor for effective air conditioner performance. Avoid placing any obstructions around the sensor.**

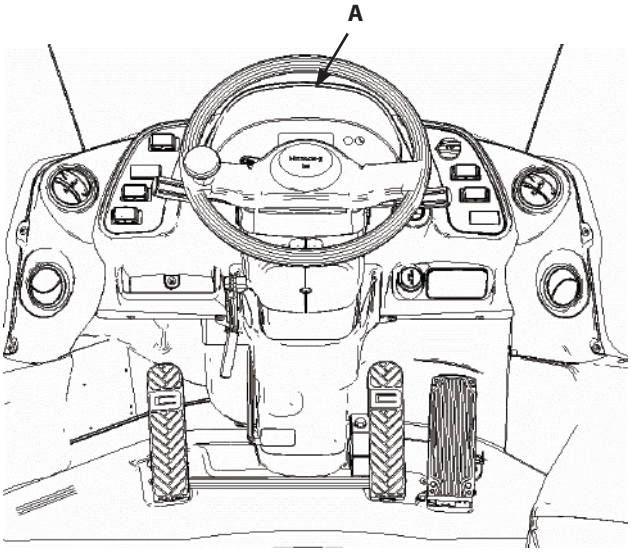

MNTL-01-063-2 ja

A: Air Conditioner Sensor

Digital Radio

Control Panel

1- Power Button
Turns the device ON/OFF.

2- SRC Button
Switches the source.

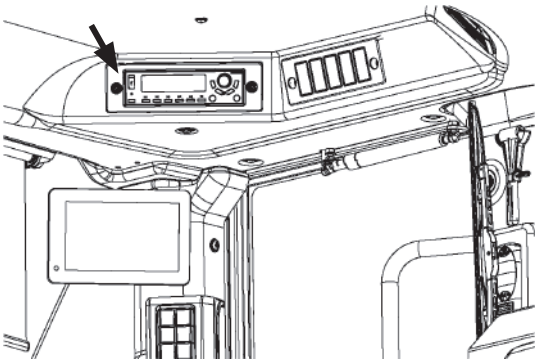

MNUD-01-401-1 ja

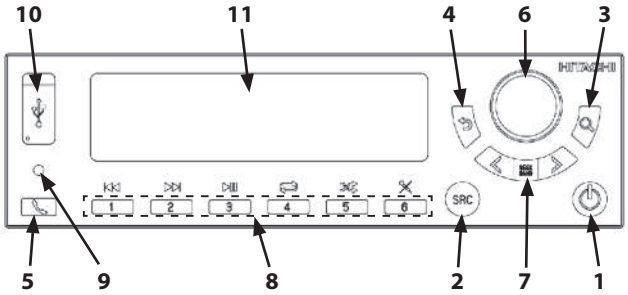

MNUD-01-402-1 ja

(DAB1→DAB2→FM1→FM2→AM→Bluetooth→USB).

3- Search Button
For selecting TY (DAB genre selections) and AM/FM presets.

4- Back Button
Goes back 1 screen when settings are being made.

5- Hands-Free Button
For receiving cell phone calls and redialing a number.

6- Rotary Switch
For adjusting the volume and making various settings and operations.

7- SEEK BAND +/- Buttons
For switching the radio frequency.

8- Preset Buttons [1] to [6]
For registering and recalling presets.
For operations when connected to a Bluetooth/USB device.

9- MIC
Built-in mike for hands-free calls.

10- USB Connector
For connecting USB devices.

11- LCD Screen (For details, refer to “LCD Screen” on page (1-182).)

12- Power Connector
Power supply from the machine and machine information input.

13- Antenna (for DAB Radio)
For connecting an antenna to receive DAB radio.

14- Antenna (for Analog Radio)
For connecting an antenna for AM/FM radio reception.

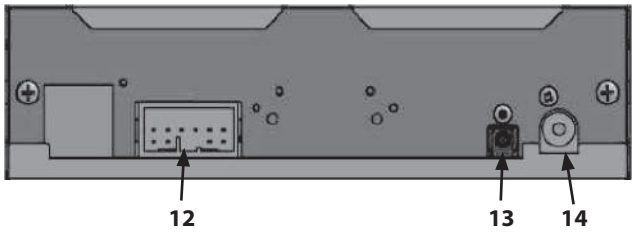

Back Panel

MNUD-01-446-1 ja

LCD Screen

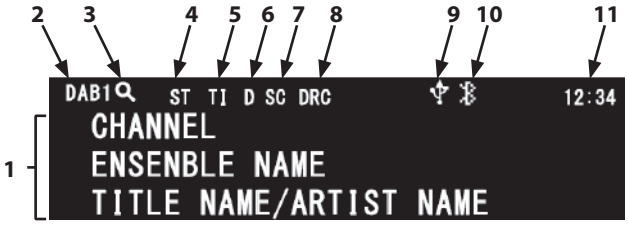

MNUD-01-403-1 ja

1- Information Display
Displays screen information, such as source channel, frequency, title, etc., as well as menu selections.

2- Source Name
Indicates the selected source.

3- Search Symbol
Lights when selecting or updating the DAB reception list.

4- ST Displayed
Lights to indicate stereo reception with DAB or FM selected.

5- TI Displayed
Lights when receiving traffic information.

6- D Displayed
Lights when receiving DAB information.

7- SC Displayed
Flashes when a secondary DAB service is available, stays lit when receiving.

8- DRC Displayed
Lights when DAB data dynamic range control is available.

9- USB Symbol
Lights when a USB device is connected.

10- Bluetooth Symbol
Lights when a Bluetooth device is connected.

11- Clock Display
Display the current time in 24H format.

12- Menu/List Item Displayed
Indicates the title of the selected menu, source or program type.

13- List Number
Indicates the number of the selected list and number of lists.

14- Volume
Indicates the volume of the source being played.

15- Repeat Symbol
Lights when playing the connected Bluetooth/USB device in repeat mode.

16- Random Symbol
Lights when playing the connected Bluetooth/USB device in random mode.

17- Folder Number
Indicates the folder number of the memory being played when connected to a USB device.

18- Track Number
Indicates the track number being played when connected to a USB device.

MNUD-01-406-1 ja

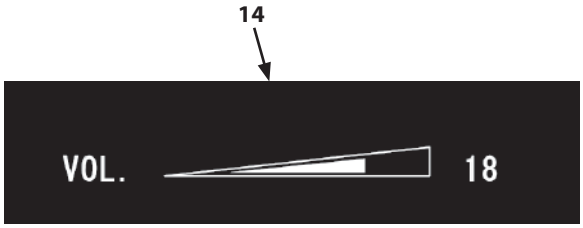

MNUD-01-405-1 ja

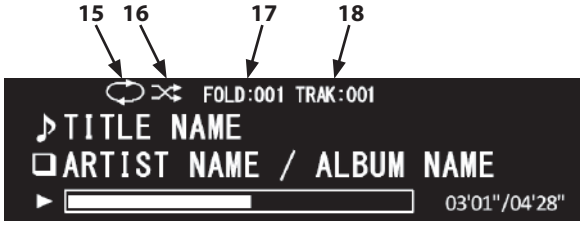

MNUD-01-404-1 ja

Basic Operations

Turning ON the Radio

When the machine's key switch is turned to ON or ACC, if the radio is on standby, the previously selected source is displayed on LCD screen (2).
If nothing is displayed on LCD (2), press power button (1). The previously selected source screen is displayed on LCD (2).

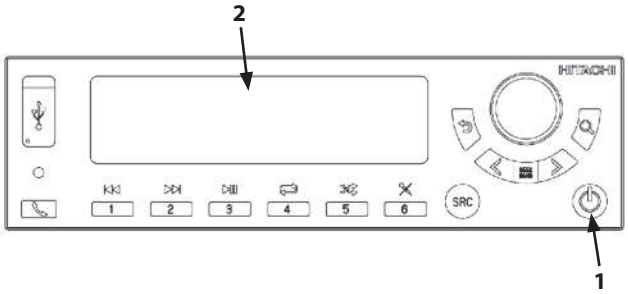

MNUD-01-402-2 ja

NOTE

The start-up state of the radio depends on the last operation when the key switch was turned OFF. Refer to "Turning OFF the Radio."

Turning OFF the Radio

When the machine's key switch is on either ON or ACC, pressing power button (1) turns OFF LCD screen (2) but power button (1) remains lit. (Standby mode)

If the key switch is turned to OFF while the radio is ON, both power button (1) and LCD screen (2) turn OFF.

Selecting a Source

Long pressing SRC button (1) opens source selection screen (4).

- Turn rotary switch (2) to highlight the desired source.

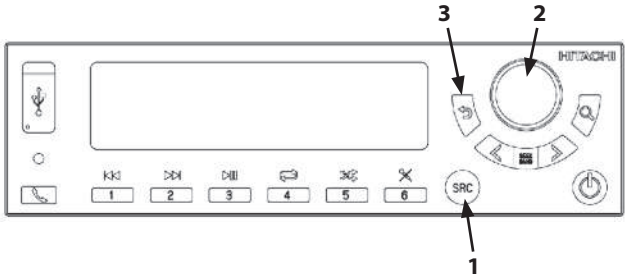

MNUD-01-402-3 ja

MNUD-01-407-1 ja

(DAB1→DAB2→FM1→FM2→AM→Bluetooth→USB→SETTING→DAB1→SETTING→USB→Bluetooth→AM→FM2→FM1→DAB2→DAB1).

- Pressing rotary switch (2) opens the sub-screen of the selected source.
- Pressing SRC button (1) while on the source screen switches to the next source screen. (DAB1→DAB2→FM1→FM2→AM→Bluetooth→USB→DAB1).

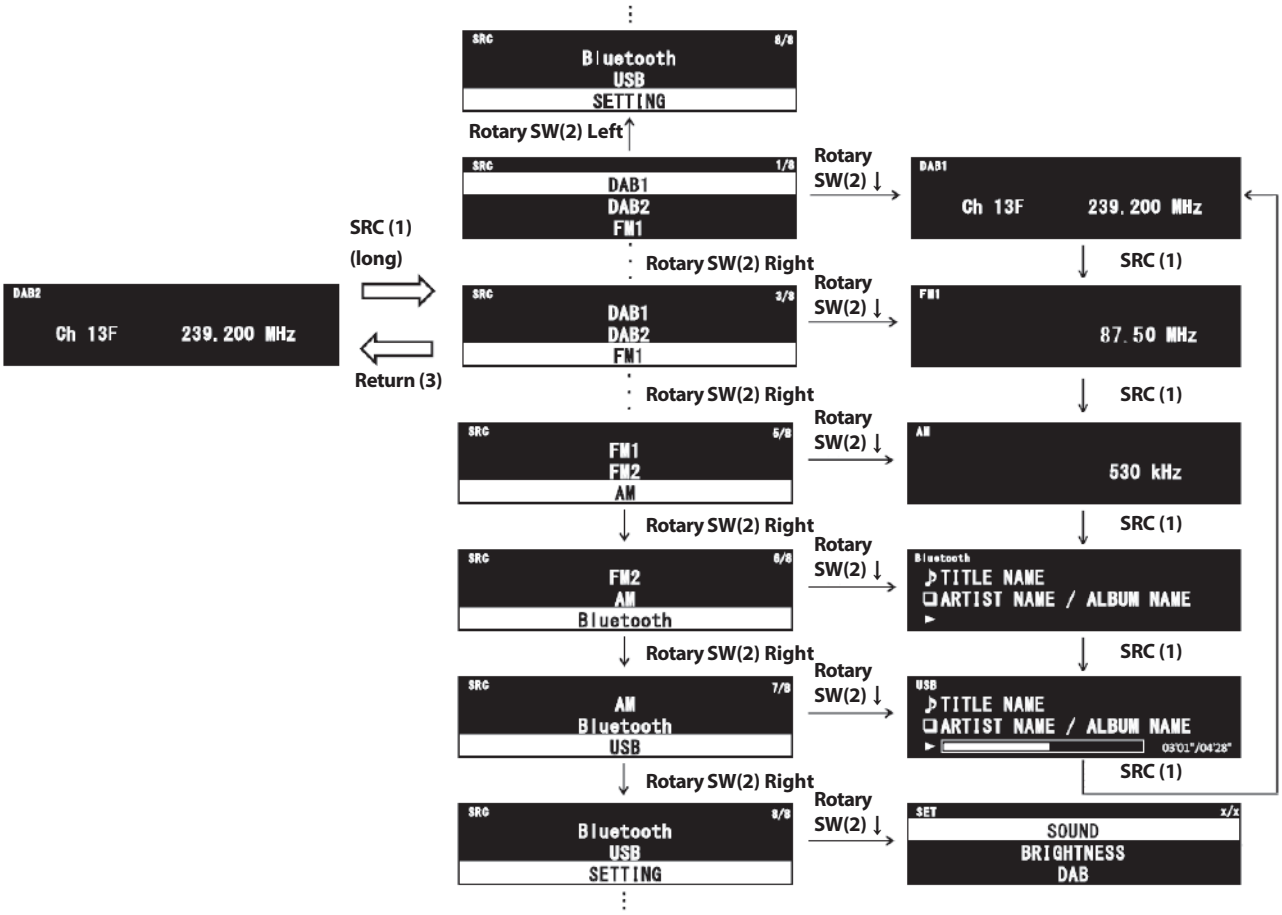

MNUD-01-408-1 en_GB

Adjusting the Volume

The volume can be adjusted individually for hands-free calls and for each source.

Turn rotary switch (1) to the right to increase volume, to the left to decrease it.

The volume can be adjusted from level 0 (mute) to 32.

NOTE

If no operations are made for 3 seconds on the volume adjustment screen, it switches automatically to the source screen.

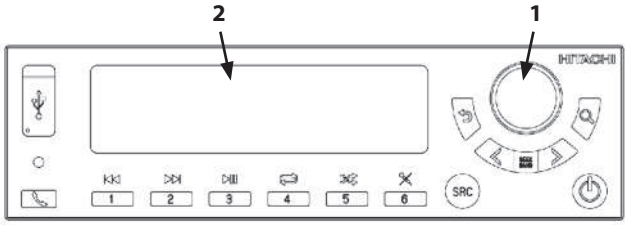

MNUD-01-402-4 ja

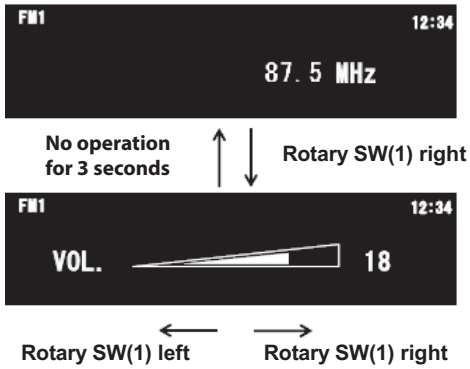

MNUD-01-416-1 en_GB

Digital Audio Broadcasting (DAB)

DAB is a digital radio standard for broadcasting digital audio radio services. DAB uses a wide-bandwidth broadcasting technology.

Registered Trademarks

The Bluetooth® wordmark and logo are registered trademarks that belong to Bluetooth SIG, Inc. and Scribble Design Inc. (SDI) uses these trademarks under license.
The names of other companies, product and services used here are the trademarks or registered trademarks of their respective companies.

CAUTION

- **Do not listen to or operate the radio while driving or working.**
- **The speaker volume may vary with the source, radio, USB audio input, Bluetooth® device and/or hands-free phone. Adjust each source to an appropriate volume.**

IMPORTANT

Only one Bluetooth® device can be connected at a time.

DAB Operation

The radio can receive both DAB and DAB+ radio. When playing a track, both its title and artist name are displayed. When receiving other programs, the name of the service is displayed.

NOTE

The only difference between DAB1 and DAB2 is the grouping of preset numbers. Their function is identical.

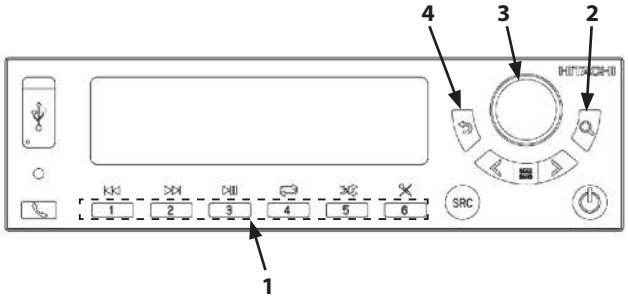

MNUD-01-402-5 ja

Calling up Presets

Pressing a preset button (1) tunes the frequency of the registered station. The selected preset button lights up.

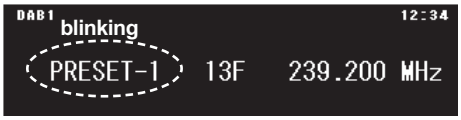

MNUD-01-447-1 ja

Registering Presets

Long-pressing a preset button (1) while a DAB station is tuned registers the currently tuned frequency as that preset number. The selected preset button flashes for 3 seconds.

Updating the DAB List

This function creates a list of DAB stations that can be tuned.

1. Long-press search button (2).
2. When “UPDATE THE DAB LIST?” is displayed, press rotary switch (3) to start updating the list. Progress is indicated as a percentage.
   Press back button (4) to cancel updating.
3. Once relevant service can be used, “COMPLETED” appears on the screen and the list is updated.
   If updating the list times out, “FAILED” is displayed and the list is not updated.

   NOTE

   The DAB list can be updated automatically. For how to update it automatically, refer to “DAB Settings” on page (1-207).

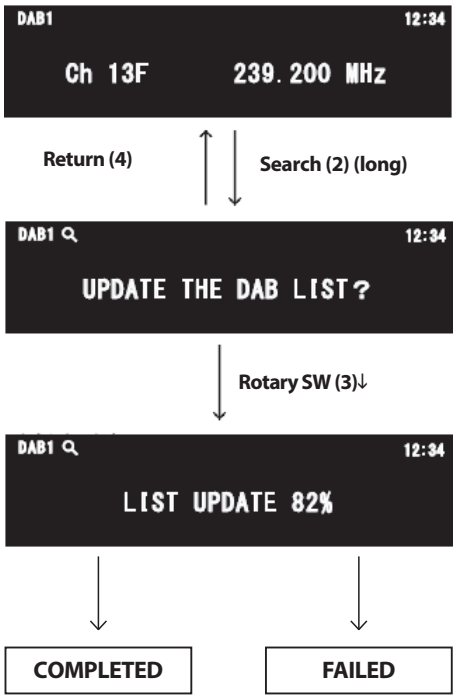

MNUD-01-409-1 en_GB

Searching by Program Type (PTY Search)

When the source is on DAB, the service list can be searched by program type, such as music or speech.

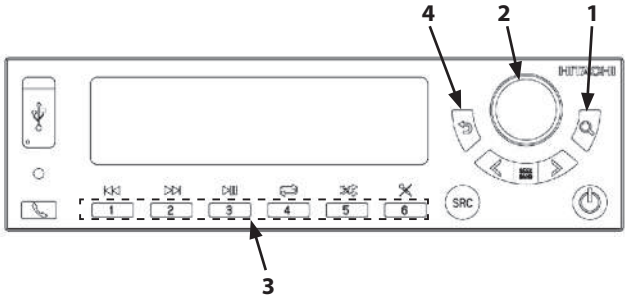

MNUD-01-402-6 ja

NOTE

Prior to doing a PTY search, update the DAB list.

1. Press search button (1).
2. Turn rotary switch (2) and select the desired program type (PTY) from ALL, MUSIC and SPEECH.
3. Press rotary switch (2). Available services are listed.
4. Turn rotary switch (2) to highlight a service and then press the rotary switch.

NOTE

- *If the result of a PTY search is no applicable PTY in the DAB list, "NO Program Type" is displayed.*
- *Up to 6 services can be registered to preset buttons (3), allowing PTY search to be skipped. Long-hold a preset button while the service to be registered is selected.*

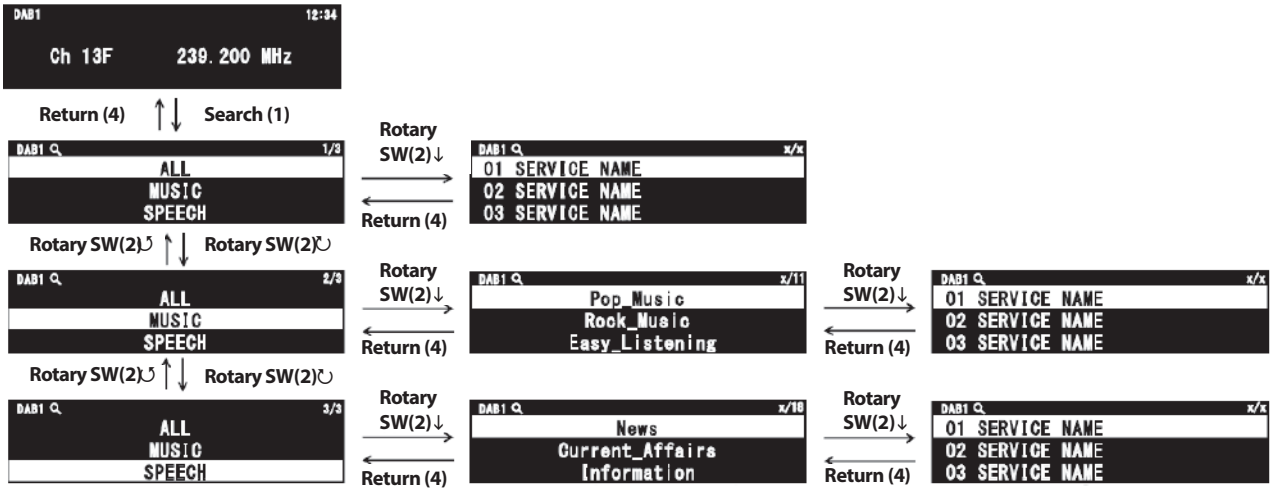

MNUD-01-410-1 en_GB

PTY Search Service Selections

MUSIC	SPEECH
Pop_Music	News
Rock_Music	Current_Affairs
Easy_Listening	Information
Light_Classical	Sport
Classical_Music	Education
Other_Music	Drama
Jazz_and_Blues	Arts
Country_Music	Science
National_Music	Talk
Oldies_Music	Weather
Folk_Music	Finance
	Children's
	Factual
	Religion
	Phone_In
	Travel
	Leisure
	Documentary

Ensemble Jump

Long-press SEEK BAND +(1) or -(2) to jump to the next or previous ensemble (group of frequencies).

NOTE

The DAB list must be updated before using ensemble jump.

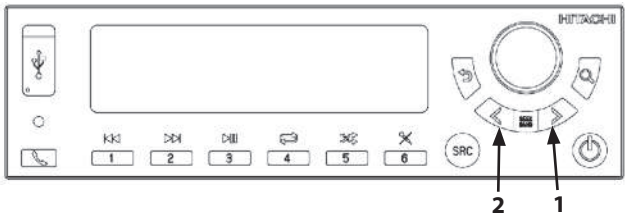

MNUD-01-402-7 ja

Channels (Frequencies) of DAB Broadcasts

ch	MHz	ch	MHz	ch	MHz
5A	174.928	8A	195.936	11A	216.928
5B	176.640	8B	197.648	11B	218.640
5C	178.352	8C	199.360	11C	220.352
5D	180.064	8D	201.072	11D	222.064
6A	181.936	9A	202.928	12A	223.936
6B	183.648	9B	204.640	12B	225.648
6C	185.360	9C	206.352	12C	227.360
6D	187.072	9D	208.064	12D	229.072
7A	188.928	10A	209.936	13A	230.784
7B	190.640	10B	211.648	13B	232.496
7C	192.352	10C	213.360	13C	234.208
7D	194.064	10D	215.072	13D	235.776
–	–	–	–	13E	237.488
–	–	–	–	13F	239.200

Service Jump

Long-press SEEK BAND +(1) or -(2) to jump to the next or previous service.

NOTE

The DAB list must be updated before using service jump.

Using the AM/FM Radio

CAUTION

Do not listen to or operate the radio while driving or working.

The radio receives both AM and FM stations.

NOTE

The only difference between FM1 and FM2 is the grouping of presets; they function the same way.

Control Panel

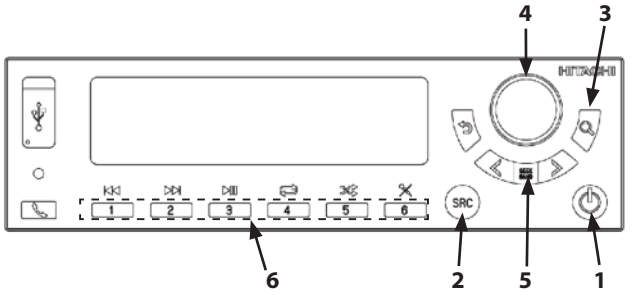

MNUD-01-402-8 ja

1- Power Button
Turns the radio ON/OFF.

2- SRC Button
Switches the source each time pressed:

DAB1→DAB2→FM1→FM2→AM→Bluetooth→USB.

3- Search Button
For registering and recalling AM and FM presets.

4- Rotary Switch
Adjusts the volume.

5- SEEK BAND +/- Buttons
For switching the radio frequency.

6- Preset Buttons [1] to [6]
For registering and recalling presets.

Registering Preset Stations

1. Select the station you wish to preset. For how to tune stations, refer to “Tuning Stations” on page (1-195).
2. After tuning a station, long-press one of the preset buttons (1) for about 1 second. The frequency of the tuned station is registered to that button. When presetting is complete, the preset number (“PRESET-1” for example) flashes 3 times on LCD screen (5).
   Pressing a preset button (1) normally after it is registered tunes the station that was preset.
3. To change a preset afterwards, simply go through the same steps for the new preset.

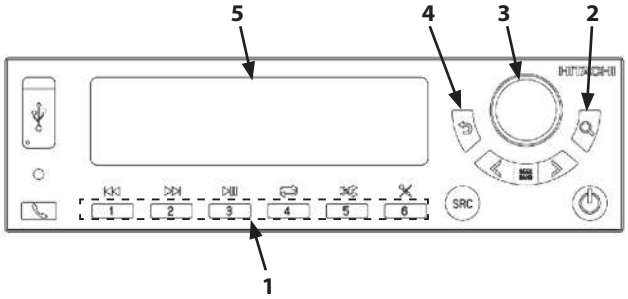

MNUD-01-402-9 ja

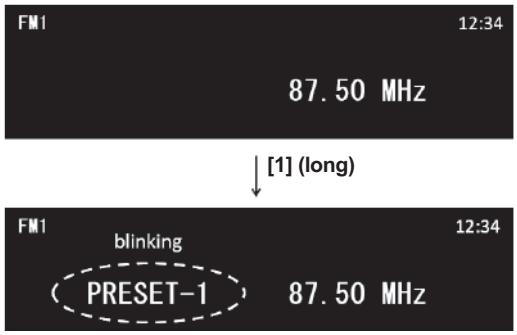

MNUD-01-411-1 en_GB

Calling up Preset Stations

Press any of the preset buttons (1). The radio tunes the station preset to that button and “PRESET-1” or the like is displayed on LCD screen (5).

Default Settings

PRESET	AM (kHz)	FM (MHz)
1	522	87.50
2	909	97.00
3	999	98.00
4	1089	99.00
5	1539	107.00
6	1629	108.00

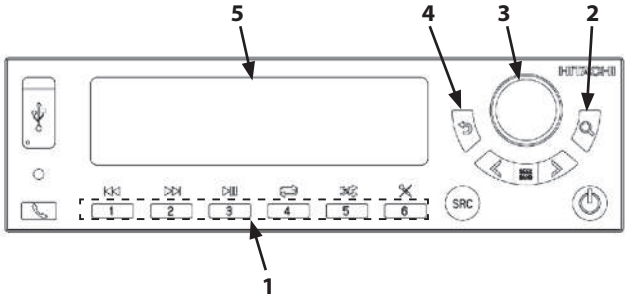

MNUD-01-402-9 ja

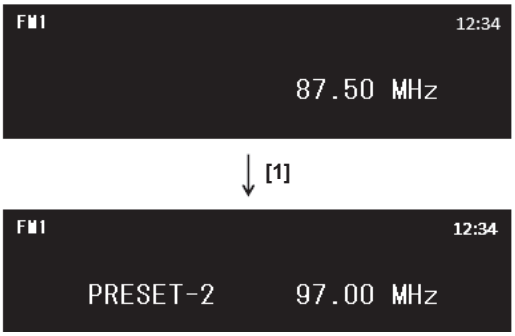

MNUD-01-412-1 ja

IMPORTANT

As presets are stored in internal memory, they are not lost even when the power supply is interrupted. If settings are changed, they are saved when the ACC power supply is OFF. But if ACC power and battery power are OFF at the same time, they cannot be saved to internal memory and changes are not stored.

Auto-Preset Function

Long-pressing search button (2) while AM or FM is selected automatically registers the 6 stations with best reception to the preset buttons in ascending order of frequency.
“AUTO PRESET” flashes on LCD screen (5) while they are being registered.
If fewer than 6 stations are available, it adds the number lacking from the default preset frequencies.

MNUD-01-413-1 ja

How to Tune Stations

- Auto-Tuning (Auto Seek)
  Long-press and then release SEEK BAND + (1) or - (2) button. Once the radio finds a station with good reception, it stops automatically.
  To search higher frequencies, press SEEK BAND + button (1). To search lower frequencies, press SEEK BAND - button (2).
  If it cannot tune any stations automatically, due to weak signal, such as when between tall buildings, the radio continues auto-searching. Press either SEEK BAND + (1) or - (2) button to stop auto-searching.

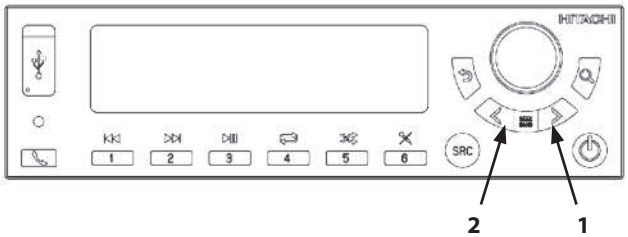

MNUD-01-402-10 ja

NOTE

If it cannot tune any stations automatically, due to weak signal, such as when between tall buildings, try tuning a station manually.

MNUD-01-414-1 en_GB

- Manual Tuning (Manual Seek)
  Press SEEK BAND + (1) or - (2) button to go through frequencies 1 at a time.
  To search higher frequencies, press SEEK BAND + button (1). To search lower frequencies, press SEEK BAND - button (2).

NOTE

AM frequency interval : every 9 kHz

FM frequency interval : every 0.05 MHz

MNUD-01-415-1 en_GB

Bluetooth® Connections

IMPORTANT

The radio can pair with and control Bluetooth® devices that meet the following characteristics.

Bluetooth® Characteristics

Frequency	2.4 GHz
Version	3
Class	2
Compatible Profiles	A2DP, AVRCP, HFP, HSP, SPP
Maximum No. of Paired Devices	Max 16

The radio can play audio files on a Bluetooth® connected cell phone or audio device.

NOTE

For information on pairing, refer to "Pairing" on page (1-208).
For how to connect to Bluetooth® devices, refer to "Bluetooth® Connections" on page (1-210).

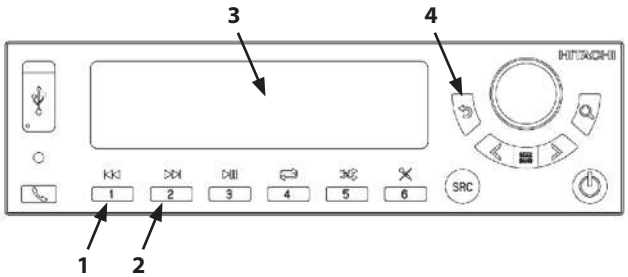

MNUD-01-402-22 ja

MNUD-01-418-1 en_GB

The title, artist and album name of the audio file playing are displayed on LCD screen (3).
If a title is too long to display on 1 screen, it is split and appears as illustrated at right.
Press back button (4) to scroll back to the start of the title.

Moving Between Tracks

Pressing [2/FF] button (2) skips to the next track.

Pressing [1/Back] button (1) skips to the previous track, or to the start of the song that is playing, depending on how the app controlling the connected Bluetooth® device operates. Pressing [1/Back] button (1) after reaching the beginning skips to the previous track.

Fast-Forward/Rewind

While playing a track, long-pressing [2/FF] button (2) fast forwards it until the button is released. Fast-forward symbol (5) is displayed during fast-forwarding.

While playing a track, long-pressing [1/RW] button (1) rewinds it until the button is released. Rewind symbol (6) is displayed during rewinding.

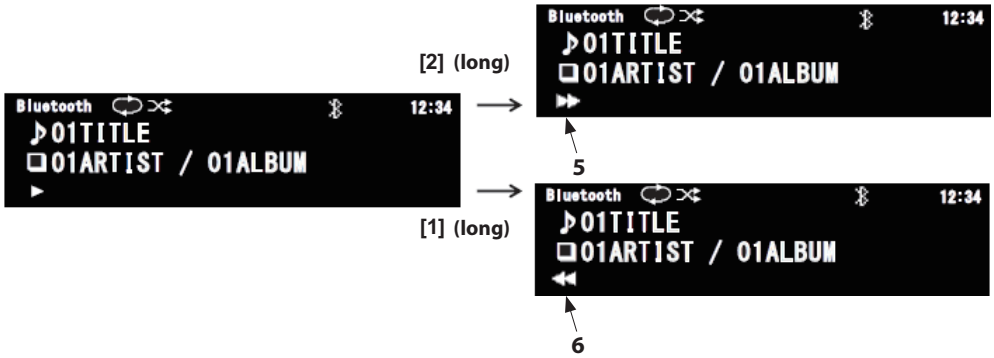

MNUD-01-420-1 en_GB

Pause/Play

Pressing [3/Play/Pause] button (1) while a track is playing, pauses playback and displays pause symbol (4).
Pressing [3/Play/Pause] button (1) again resumes playing the track.

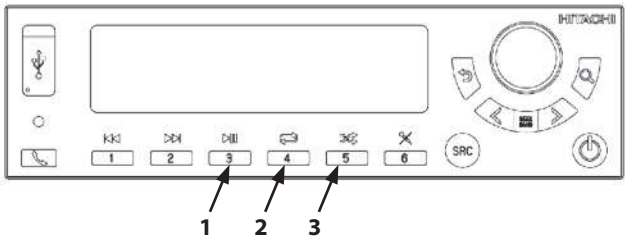

MNUD-01-402-11 ja

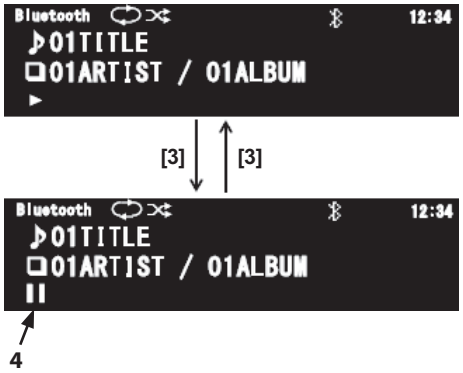

MNUD-01-419-1 ja

Repeat

Pressing [4/Repeat] button (2) plays the same track again. Repeat symbol (5) is displayed while a track is repeating.
Pressing [4/Repeat] button (2) again makes the same album or folder play again. Repeat symbol (6) is displayed while it is repeating.

NOTE

The connected device may not respond in this way.

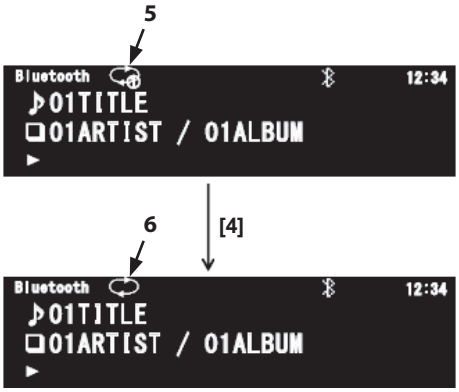

MNUD-01-421-1 ja

Random

Pressing [5/Random] button (3) plays the tracks in random order. Random symbol (7) is displayed during random play.

NOTE

The connected device may not respond in this way.

MNUD-01-422-1 ja

Hands-Free Calls

IMPORTANT

This function requires a Bluetooth®-connected cell phone.

It allows hands-free calls using a Bluetooth®-connected (HFP Protocol) cell phone.

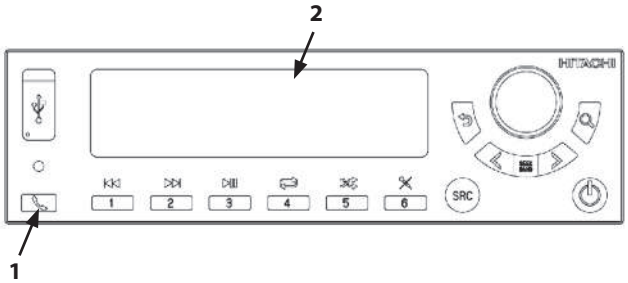

MNUD-01-402-12 ja

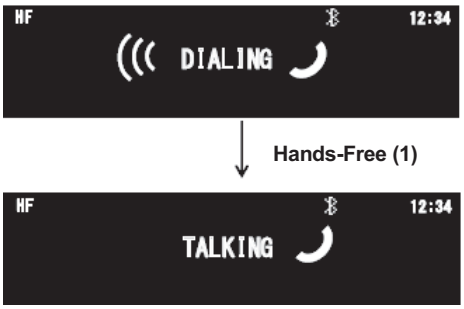

MNUD-01-423-1 en_GB

- Making Calls
  Regardless of whether the radio is playing something, when a call is made from a Bluetooth®-connected cell phone, “DIALING” is displayed on screen (2) and the sound of dialing comes from the speakers.
  When it is answered, “TALKING” is displayed on screen (2) and the voice of the other party comes from the speakers.
- Redial
  Long-pressing hands-free button (1) makes a call to the number of the last incoming call since ACC was turned ON.
  “DIALING” is displayed on screen (2) and the sound of ringing comes from the speakers. When it is answered, the voice of the other party comes from the speakers.
  If hands-free button (1) is pressed during a call, it ends the call.

NOTE

The redial function may not work if the last incoming call was too short.

- Incoming Calls
  Regardless of whether the radio is playing something, when a call to the cell phone is received, “CALLING” is displayed on screen (2) and the sound of dialing comes from the speakers.
  Press hands-free button (1) to connect to the call.

  NOTE

  - *Even if the radio is OFF, when a call is received, the radio turns ON automatically, “CALLING” is displayed on screen (2) and the sound of dialing comes from the speakers.*
  - *The radio can be configured to allow automatic answering of incoming calls. For how to configure this, refer to “Hands-Free Settings” on page (1-209).*

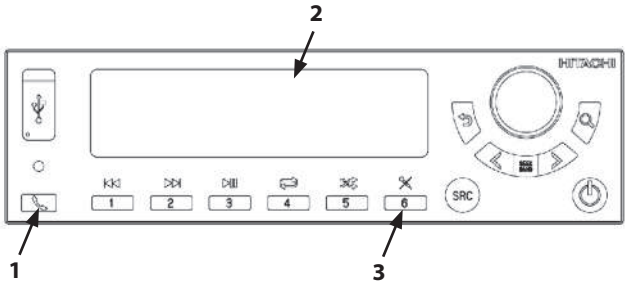

MNUD-01-402-13 ja

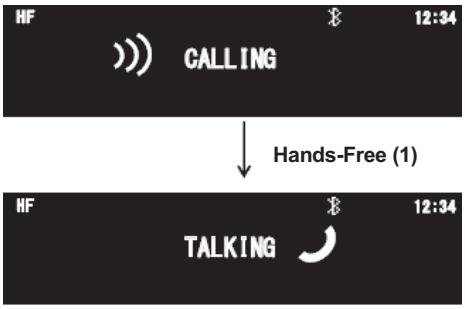

MNUD-01-424-1 en_GB

- Rejecting Calls
  When there is an incoming call, long-pressing hands-free button (1) cuts off the call without answering it. The radio returns to the state of play before the call.
- MIC Mute
  A microphone for hands-free calls is built into the front panel of the radio.
  Pressing [6/Mute] button (3) toggles the mic ON/OFF.
  When the mic is OFF, Mute MIC (4) is displayed and the other party cannot hear anything from this side.

  NOTE

  When there is an incoming call, the mic mute function is cancelled automatically.

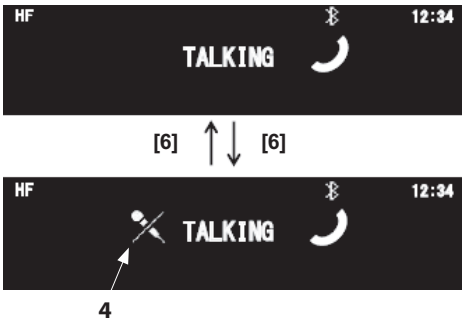

MNUD-01-425-1 ja

USB Device Connections

The radio can play audio files on USB-connected cell phones or audio devices.

USB Characteristics

Rated Amperage	Maximum 2 A
Output Voltage	5.00 V (When USB cable not used)
Supported Formats	MP3, WMA, AAC, WAV

NOTE

Formats other than those above, such as MP4, are not supported, so such data is skipped and will not play. Even if data is played, it may not play correctly, depending on its condition.

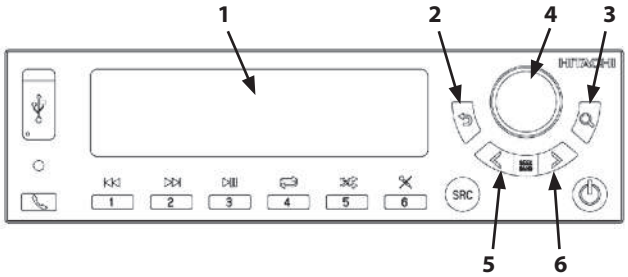

MNUD-01-402-14 ja

MNUD-01-427 ja

IMPORTANT

Basic operations are explained here, but actual operations may vary with the specifications and applications of the connected USB device. Refer to the user's manual of the USB device.

The title, artist and album name of the audio file playing are displayed on LCD screen (1).
If a title is too long to display on 1 screen, scroll the title twice.
Press back button (2) to scroll back to the start of the title.

Selecting a Play List

Press search button (3) to import play lists from specified devices, such as cell phones or audio devices.
Select the desired track and play it with rotary switch (4).

Selecting Folders or Albums

Press SEEK BAND + button (5) to move to the next folder or album.
Press SEEK BAND - button (6) to move to the previous folder or album.

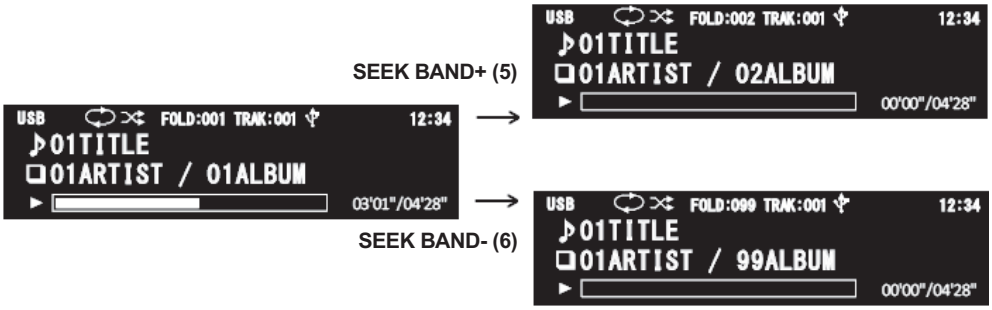

MNUD-01-426-1 en_GB

Moving Between Tracks

Pressing [2/FF] button (2) skips to the next track.

Pressing [1/Back] button (1) skips to the previous track, or to the start of the song that is playing, depending on how the app controlling the connected device operates. Pressing [1/Back] button (1) after reaching the beginning skips to the previous track.

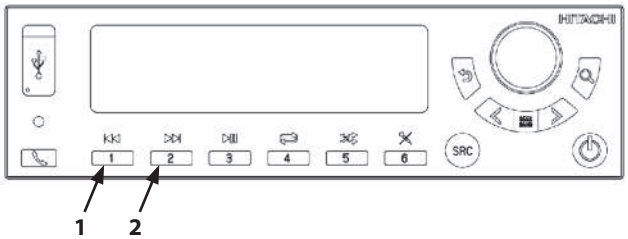

MNUD-01-402-15 ja

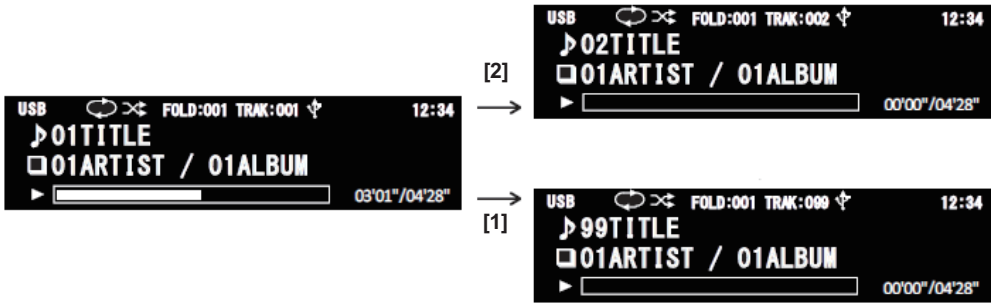

MNUD-01-428-1 ja

Fast-Forward/Rewind

While playing a track, long-pressing [2/FF] button (2) fast forwards it until the button is released. Fast-forward symbol (3) is displayed during fast-forwarding.

While playing a track, long-pressing [1/RW] button (1) rewinds it until the button is released. Rewind symbol (4) is displayed during rewinding.

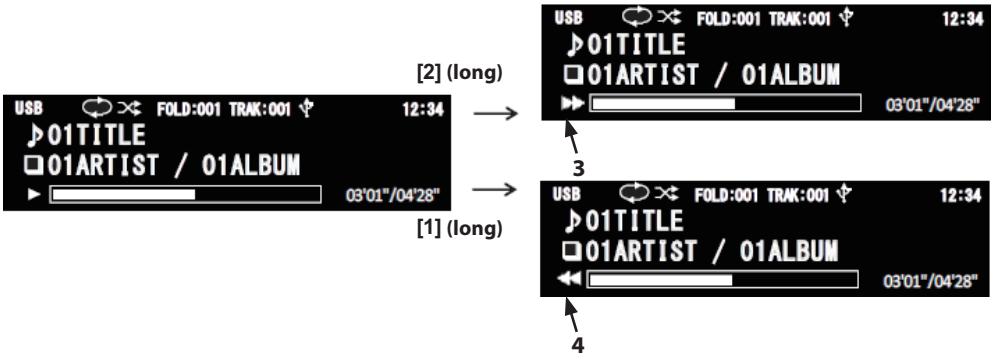

MNUD-01-429-1 en_GB

Pause/Play

Pressing [3/Play/Pause] button (1) while a track is playing, pauses playback and displays pause symbol (4).
Pressing [3/Play/Pause] button (1) again resumes playing the track.

NOTE

Playback will resume even if the USB device is disconnected or the ACC power is turned OFF during playback.

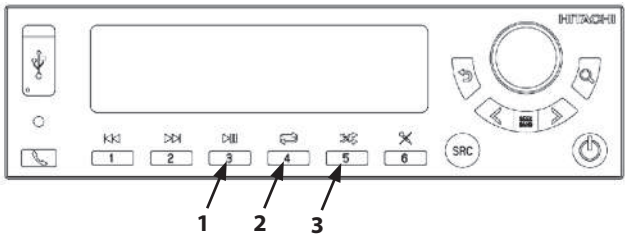

MNUD-01-402-16 ja

MNUD-01-430-1 ja

Repeat

Pressing [4/Repeat] button (2) plays the same track again. Repeat symbol (5) is displayed while a track is repeating.
Pressing [4/Repeat] button (2) again makes the same album or folder play again. Repeat symbol (6) is displayed while it is repeating.

NOTE

The connected device may not respond in this way.

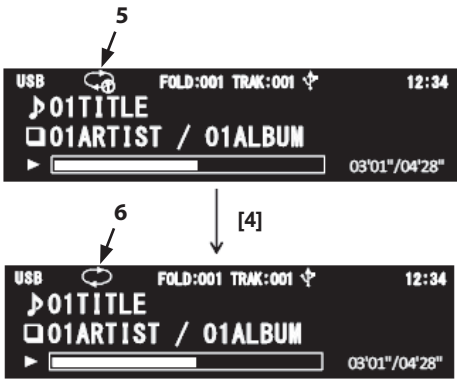

MNUD-01-431-1 ja

Random

Pressing [5/Random] button (3) plays the tracks in random order. Random symbol (7) is displayed during random play.

NOTE

The connected device may not respond in this way.

MNUD-01-432-1 ja

Setting Screens

Press rotary switch (1) from any source screen to open setting screen (2).
Alternatively, select “SETTING” when selecting a source to open setting screen (2). (For how to select a source, refer to “Selecting a Source” on page (1-185).)
Settings meus are laid out with 8 menus and their corresponding sub menus.
Turn rotary switch (1) to highlight a menu and then press the rotary switch to display its sub menus.

			Default Setting
SOUND	*	BALANCE	0
	*	TREBLE	0
	*	BASS	0
	*	LOUDNESS	OFF
BRIGHTNESS	*	DISPLAY	0
	*	SWITCHES	0
DAB	*	TRAFFIC INFORMATION	OFF
	*	LIST UPDATE	MANUAL
	*	DISPLAY	CH/FREQUENCY
	*	ANTENNA POWER	OFF
PAIRING			
HANDSFREE	*	AUTO ANSWER	OFF
Bluetooth CONNECT	*	AUTO CONNECT	ON
		SELECT	
		DELETE	
INFORMATION		SOUND	
		BRIGHTNESS	
		DAB	
		HANDSFREE	
		Bluetooth CONNECT	
		REGION	
		VERSION	
CLOCK	*	DISP	OFF
		TIME	
RESET			

MNTL-01-009-1 en_GB

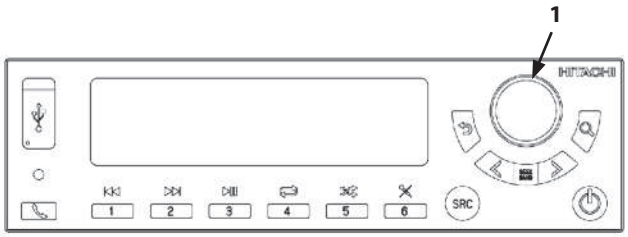

MNUD-01-402-17 ja

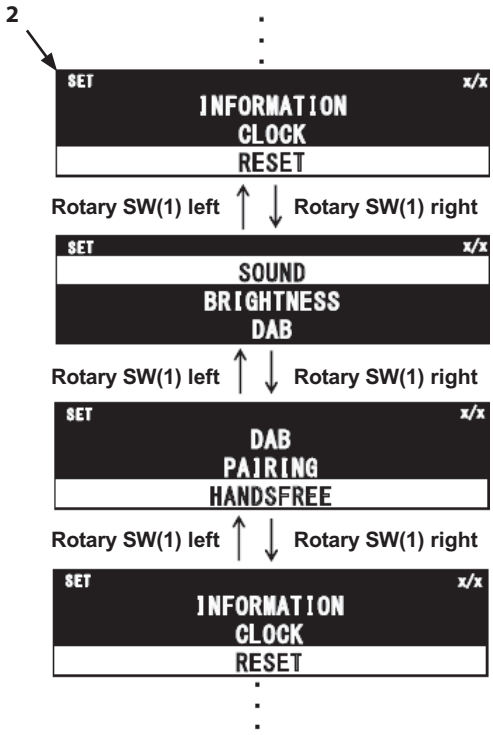

MNUD-01-433-1 en_GB

Resetting to Defaults

When “RESET” is selected, “RESET ALL SETTINGS?” is displayed on the LCD screen. Turn rotary switch (1) to highlight “YES” and then press the rotary switch. All the items above with asterisks (*) are reset to their default settings. Refer to the settings screen table on page (1-203).
If “NO” is selected, the menu closes without changing settings.

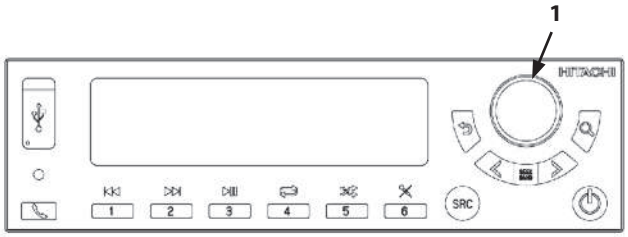

MNUD-01-402-17 ja

MNUD-01-434 ja

Sound Settings

1. From the SOUND menu, turn rotary switch (1) to highlight a sub menu and then press the rotary switch.
2. The setting screen of the selected sub menu opens.
3. Turn rotary switch (1) to change the content of settings.
4. Press rotary switch (1) to confirm changes.
5. Press back button (2) to return to the menu screen without changing settings.

- Adjusting the Balance
  This adjusts the balance of right/left speaker volumes.
  It can be adjusted in 21 levels. When on L10, output comes only from the left speaker, at 0 it is evenly balanced and at R10, only from the right.
- Adjusting the Treble
  This adjusts the level of the high range output from the speakers.
  It can be adjusted in 21 levels. At +10 the treble is at its strongest, at 0 neutral, and at -10 at its weakest.
- Adjusting the Bass
  This adjusts the level of the low range output from the speakers.
  It can be adjusted in 21 levels. At +10 the bass is at its strongest, at 0 neutral, and at -10 at its weakest.
- Loudness Adjustment
  This compensates for the lack of bass and treble that is felt at low volumes. To apply compensation, turn it ON; otherwise turn it OFF.

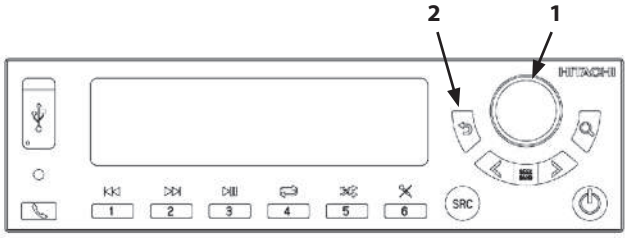

MNUD-01-402-18 ja

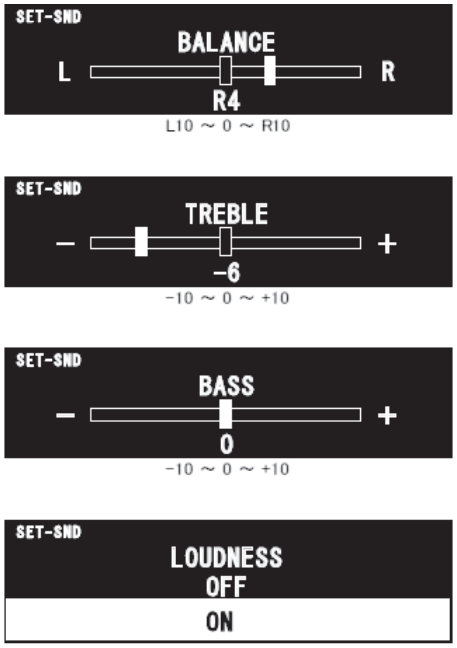

MNUD-01-435 ja

Brightness Adjustment

1. From the BRIGHTNESS menu, turn rotary switch (1) to highlight a sub menu and then press the rotary switch.
2. The setting screen of the selected sub menu opens.
3. Turn rotary switch (1) to change the brightness.
4. Press rotary switch (1) to confirm changes.
5. Press back button (2) to return to the menu screen without changing settings.

- LCD Screen
  The brightness of LCD screen (3) can be adjusted to 11 different levels.
  Standard is at 0, brightest at +5 and least bright at -5.
- Switch
  The brightness of switch backlights can be adjusted to 11 different levels.
  Standard is at 0, brightest at +5 and least bright at -5.

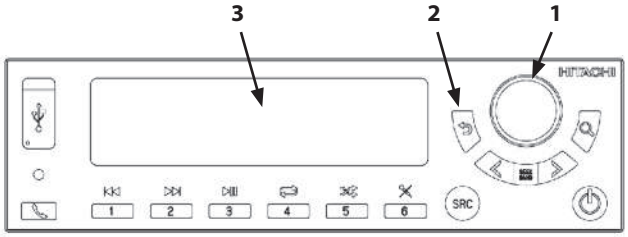

MNUD-01-402-19 ja

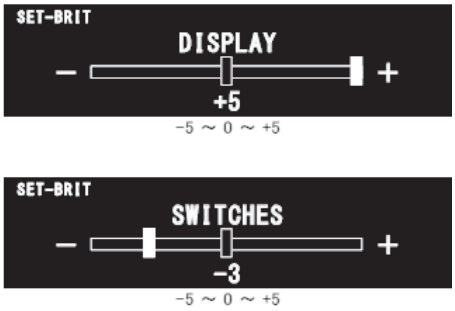

MNUD-01-436 ja

DAB Settings

1. From the DAB settings menu, turn rotary switch (1) to highlight a sub menu and then press the rotary switch.
2. The setting screen of the selected sub menu opens.
3. Turn rotary switch (1) to change the content of settings.
4. Press rotary switch (1) to confirm changes.
5. Press back button (2) to return to the menu screen without changing settings.

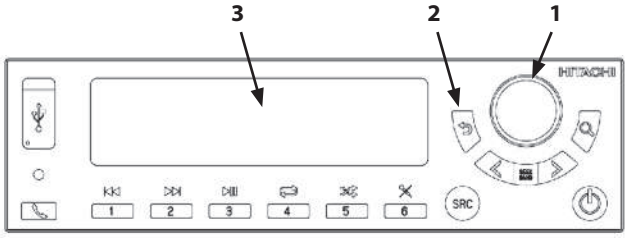

MNUD-01-402-19 ja

- Traffic Information Settings
  This allows DAB reception to be interrupted when traffic information (TI) is received.

  OFF : DAB is not interrupted when traffic information is received.

  ON : Interrupts DAB and plays traffic information when it is received.

- DAB List Update Timing Setting
  This sets the timing for acquiring DAB list updates.

  AUTO : Automatically updates the DAB list when power is turned ON after the key is turned to ACC.

  MANUAL : The DAB list is updated manually by long-pressing search button (2). For how to update it manually, refer to “Updating the DAB List” on page (1-188).

- DAB Display Mode Settings
  This configures how the list is displayed when on a DAB source.

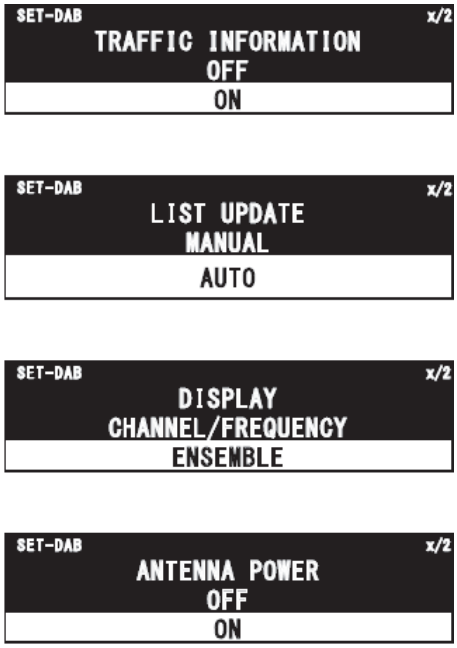

MNUD-01-437 ja

CHANNEL/FREQUENCY : Displays the channel number and frequency.

ENSEMBLE : Displays the channel number and ensemble or service name.

- DAB Antenna Power Setting
  Sets whether to supply power to the DAB antenna.

  OFF : Disabled

  ON : Enabled

Pairing

Pairing identifies and registers up to 16 Bluetooth® devices to be operated by the radio.

NOTE

When more than 16 devices are paired, 1 of them is displaced randomly by the 17th. For how to cancel the pairing of a Bluetooth® device, refer to "Deleting a Bluetooth® Device" on page (1-211).

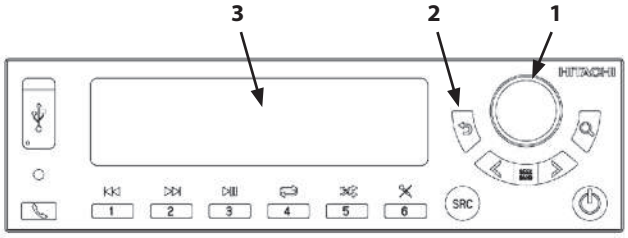

MNUD-01-402-19 ja

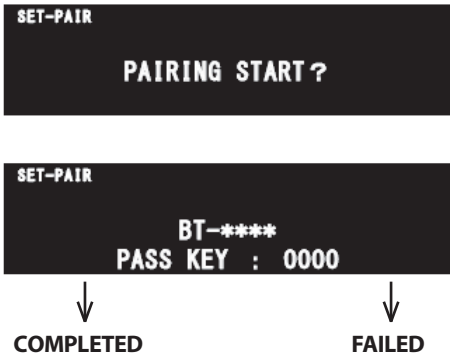

MNUD-01-438-1 en_GB

1. Turn rotary switch (1) to highlight PAIRING and then press the rotary switch.
2. "PAIRING START?" is displayed on LCD screen (3).
3. Press rotary switch (1) to start pairing.
   Press back button (2) to return to the menu screen without completing pairing.

   IMPORTANT

   A timeout error occurs if pairing fails to complete within 180 seconds of starting.

4. Once preparation for pairing with the Bluetooth® module of the radio are complete, "PASS KEY: 0000" "BT-****" are displayed on the screen.

   NOTE

   The asterisks stand for the last 4 digits of the Bluetooth® module address.

5. Once pairing is complete, "COMPLETED" is displayed onscreen and the Bluetooth® device can be operated by the radio. For how to operate them, refer to "Bluetooth® Connections" on page (1-196).
6. If pairing fails, "FAILED" is displayed on the screen. In such case, repeat the steps above.

Hands-Free Settings

1. Turn rotary switch (1) to highlight HANDSFREE and then press the rotary switch.
2. AUTO ANSWER settings screen (3) opens on LCD screen (2).
3. Highlight OFF and press rotary switch (1) to disable auto-answering of incoming calls to cell phones.
4. Highlight ON and press rotary switch (1) to open the answer time setting screen for auto answering. The time can be set from 1 to 30 seconds. Turn rotary switch (1) to the right to increase the time by 1 second, to the left to decrease it. Display the desired time and press rotary switch (1).
   Incoming calls will be answered automatically once the specified time elapses.

   NOTE

   Call quality may vary with the connected cell phone.

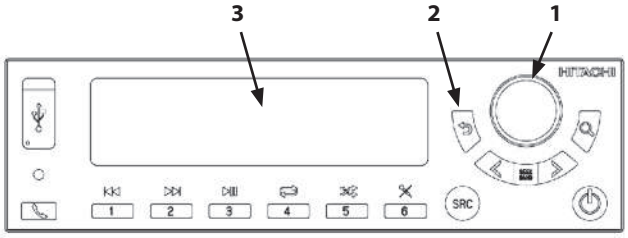

MNUD-01-402-19 ja

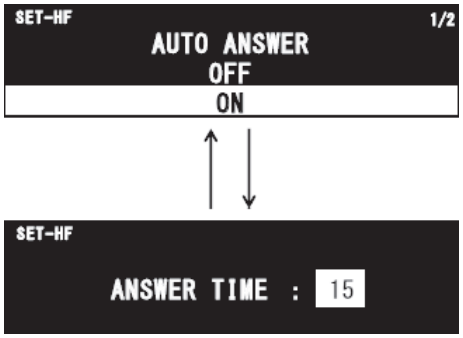

MNUD-01-439 ja

Bluetooth® Connections

This specifies how to connect a paired Bluetooth® device.

1. From the Bluetooth CONNECT menu, turn rotary switch (1) to highlight AUTO CONNECT and then press the rotary switch.
2. Highlight either ON or OFF and press rotary switch (1).

   ON : Connects the radio to the paired Bluetooth® device.

   OFF : Disables auto-connect from the radio.

3. If OFF is selected, highlight SELECT from the Bluetooth CONNECT menu and then press rotary switch (1).

   NOTE

   SELECT is only available when AUTO CONNECT is OFF.

4. A list of names and addresses of paired Bluetooth® devices is displayed.
5. Turn rotary switch (1) to highlight the device you wish to connect to and then press the rotary switch to start connecting.

   NOTE

   - *"NO DEVICE" is displayed if no Bluetooth® devices are available.*
   - *Paired device names are updated when first connected after ACC power is ON. If a device name is changed after connecting, the display is not updated.*

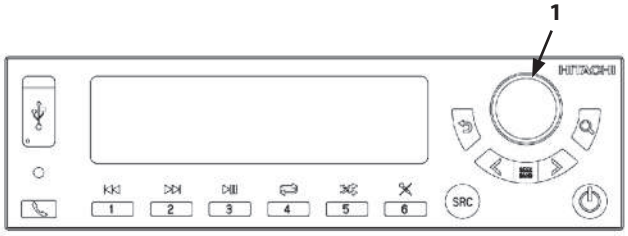

MNUD-01-402-17 ja

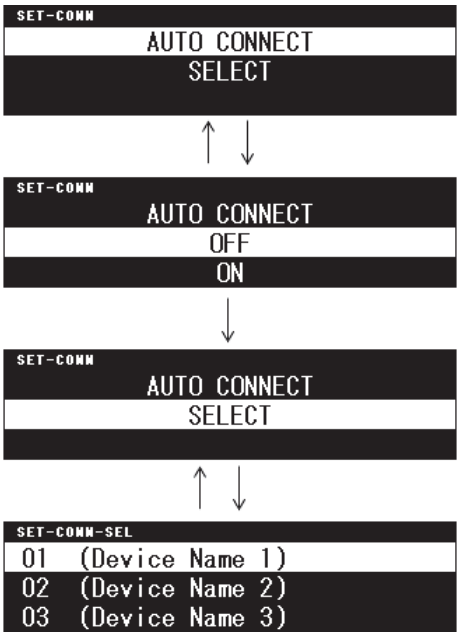

MNUD-01-440 ja

Deleting a Bluetooth® Device

This deletes the device selected in the Bluetooth® CONNECT-DELETE menu.

Turn rotary switch (1) to highlight the device you wish to delete and then press the rotary switch. Highlight YES under DELETE? and press rotary switch (1) to delete the selected device from the list.

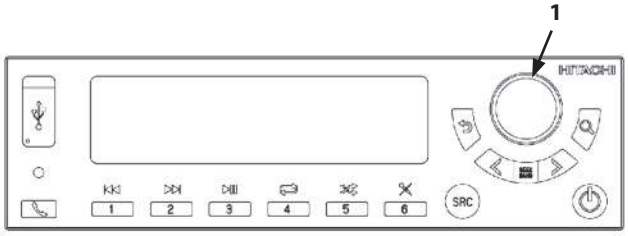

MNUD-01-402-17 ja

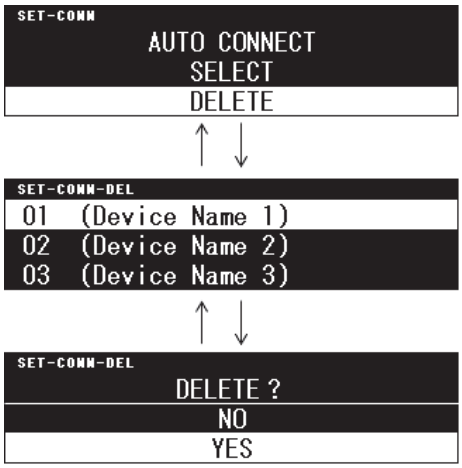

MNUD-01-441 ja

Clock Display

This configures how the current time is displayed on LCD screen (2).

1. From the CLOCK menu, turn rotary switch (1) to highlight DISP and then press the rotary switch.
2. Highlight the desired setting and press rotary switch (1).

ON : Displays the current time in 24-hour format.

OFF : The time is not displayed.

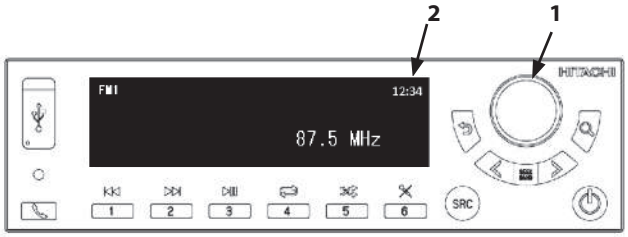

MNUD-01-402-20 ja

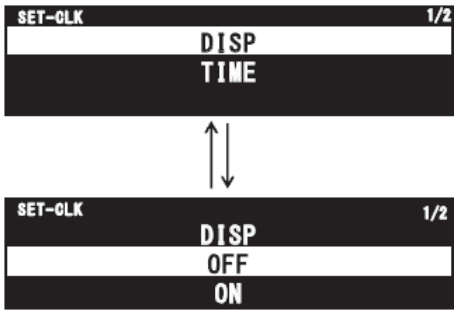

MNUD-01-442 ja

Setting the Clock

NOTE

If the battery goes dead or is interrupted, the time resets to 00:00.

1. From the CLOCK menu, turn rotary switch (1) to highlight TIME and then press the rotary switch.
2. The SET-CLK screen (3) opens.
3. Turn rotary switch (1) to highlight HOUR and then press the rotary switch. The hour can be changed to 0 to 23.
   Turning rotary switch (1) to the right increases it 1 at a time, to the left decreases it 1 at a time.

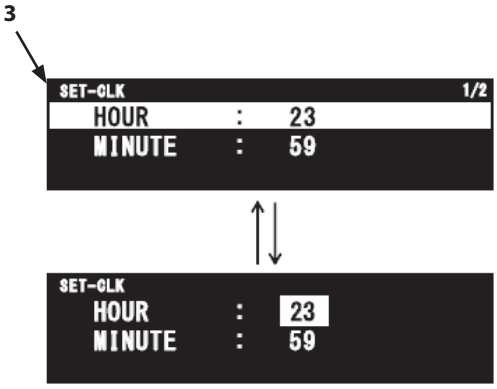

MNUD-01-444-1 ja

4. Press rotary switch (1) to complete the hour setting and return to SET-CLK screen (3).
5. Set the MINUTE in the same way. The minute can be set to 0 to 59.

Information Screen

Displays current setting information.

1. From the INFORMATION menu, turn rotary switch (1) to highlight an item and then press the rotary switch.
2. The current setting of the selected item is displayed. If there are 4 or more sub menus, turn rotary switch (1) to display them.

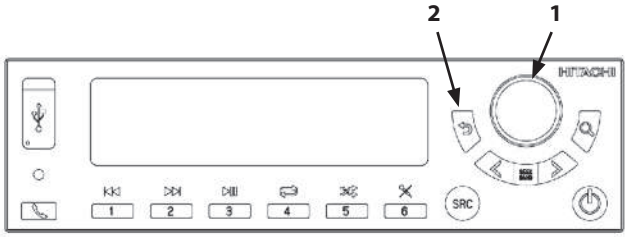

MNUD-01-402-18 ja

NOTE

The REGION (destination) and VERSION can only be displayed with this menu. Their settings cannot be changed.

- Region (Destination Setting)
  Make sure the setting is AE.

  AE: Europe, Asia, Australia
  JP: Japan
  US: USA, Canada
  SA: Central and South America

- Version
  Displays the version of the firmware, Bluetooth® and USB protocols for the radio.

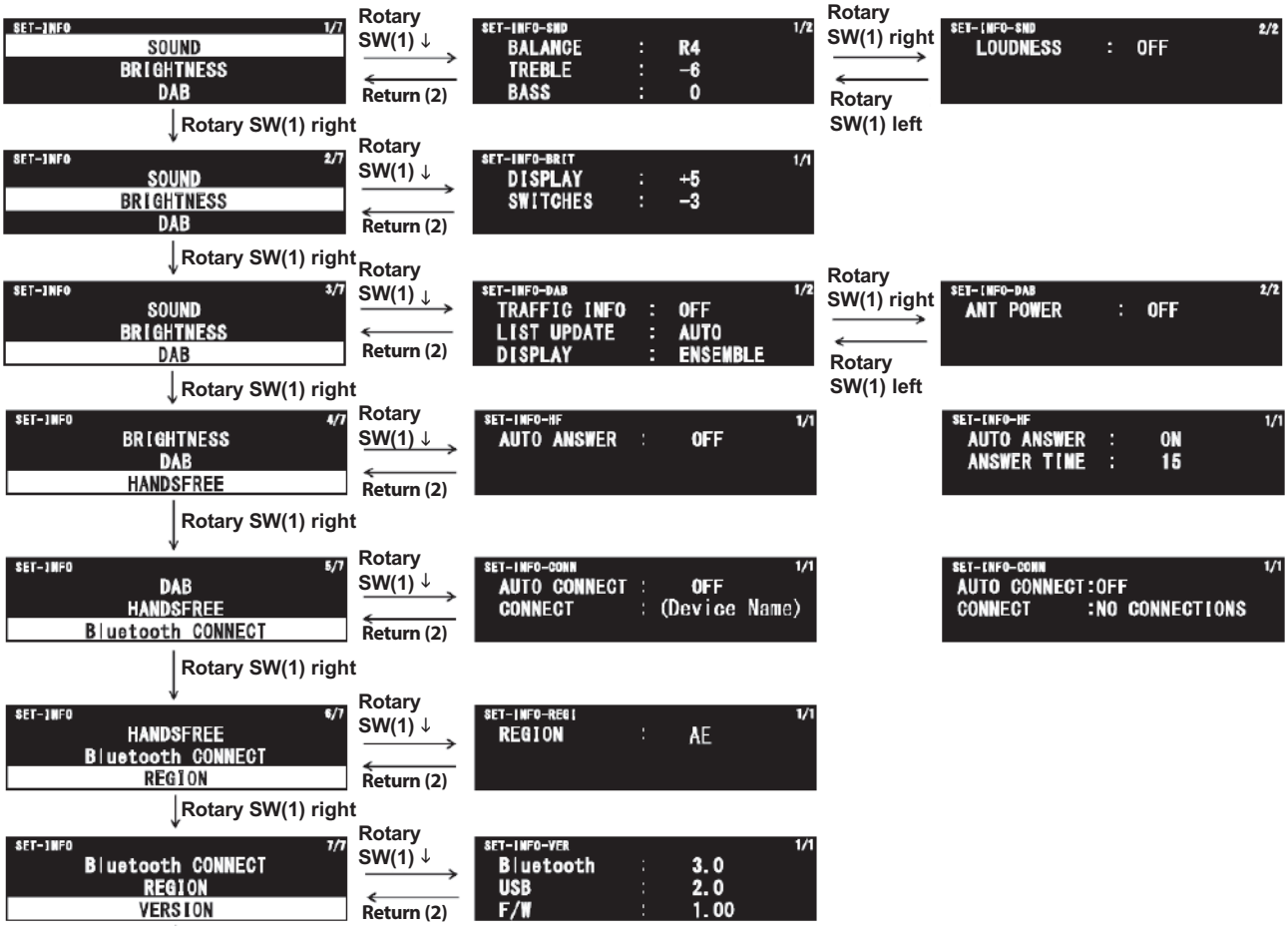

MNUD-01-445-1 en_GB

Aerial Angle Function (Optional)

Rear view camera (1) is mounted at the top of the rear grill and provides an image from under the counterweight for a specific distance behind the machine. (Rear Image)
Right (2) and left (3) side cameras are mounted on top of the cab. The images from these cameras are combined to provide one composite image of the area around the machine (surrounding image).

The aerial angle function displays a rear image from rear view camera (1) along with the surrounding image from right (2) and left (3) side cameras on sub monitor (4). This provides a supplementary way to check for obstacles around the machine.
The unaltered camera images can be displayed by turning selector knob (5) on the right console.

WARNING

- **Images are displayed to help the operator check the area around the machine.**
  People and objects depicted on the monitor may appear differently from their actual position and/or distances. Some areas, such as near and under the machine, cannot be depicted by camera images. Always check the area around the machine thoroughly before moving it.
- **Check the visibility of the monitor images before operating the machine. When visibility is poor, the field of vision may be compromised, resulting in potential for bodily injury and/or property damage.**
- **The installation positions of the cameras are adjusted for obtaining a good composite image. Do not change the positioning of rear view camera (1) or right (2) and left (3) side cameras.**
- **If the image is not clear, clean the cameras and/or monitor to make it clearer. Make sure your footing is good at all times when cleaning the cameras.**

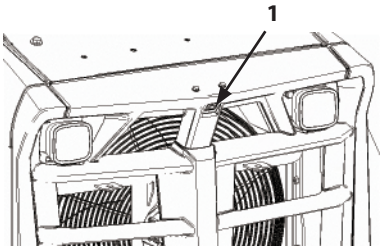

MNTL-01-064-1 ja

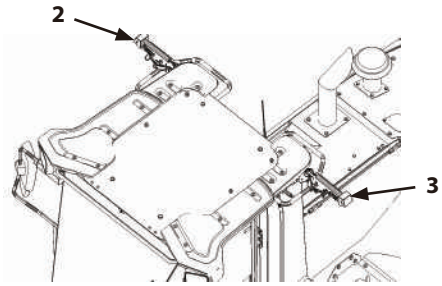

MNTL-01-053-2 ja

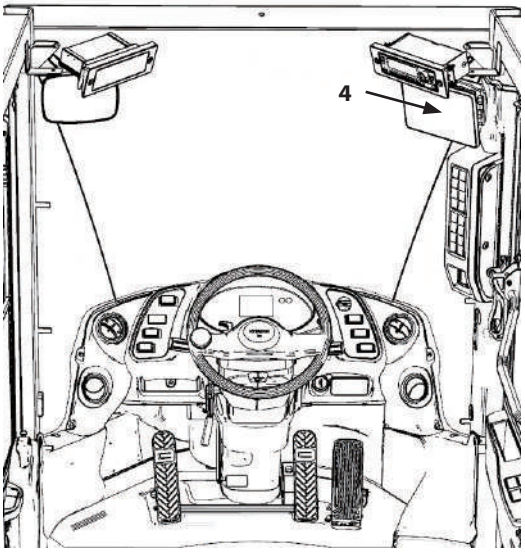

MNTL-01-041-6 ja

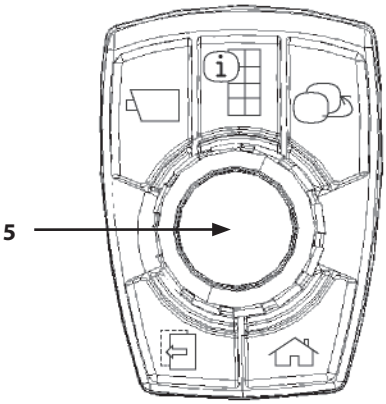

MNUD-01-252-15 ja

NOTE

Sub monitor (4) and the camera lenses are made of plastic. When cleaning them, use a clean, moist cloth and wipe them lightly. Do not use an organic solvent.

IMPORTANT

- **If there is a problem with sub monitor (4), contact Authorized Dealer.**
- **After performing work that affects the mounting position(s) of camera(s) (removing brackets and/or counterweights where cameras are mounted, replacing a camera, etc.), it may be necessary to reconfigure camera installation.**
  Check and make sure camera images are displayed correctly by using the inspection methods described in Chapter 7, "Checking Camera Images Used in Aerial Angle Images". If any camera images are not displayed correctly, contact Authorized Dealer.

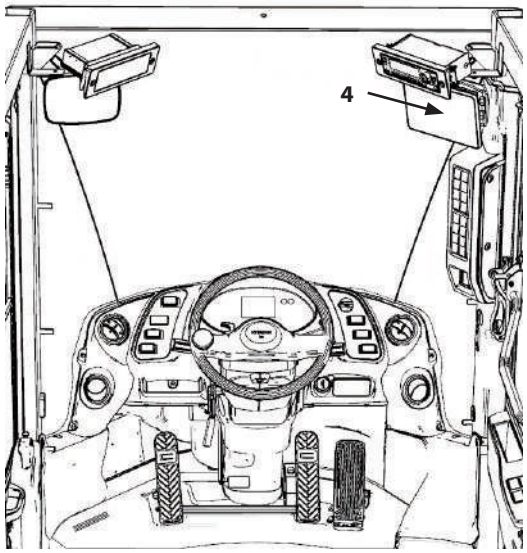

MNTL-01-041-6 ja

Switching the Monitor Display

Turn selector knob (1) to switch between screens.

- Display Screen
  1- Rear Image
  2- Surrounding Image + Rear Image

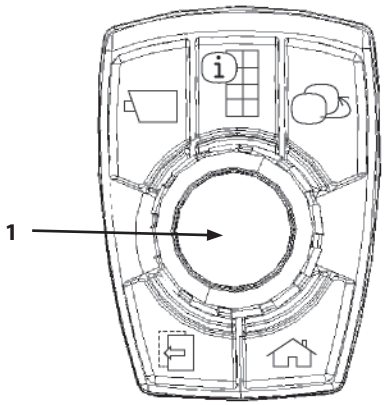

MNUD-01-252-11 ja

Display Order	Camera	Example Image
1	Rear View Camera	Rear Image 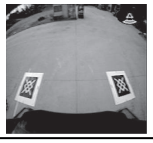
2	Rear View Camera Side Cameras	Surrounding Image + Rear Image 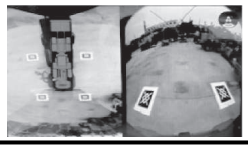

NOTE

The image displayed when driving in reverse can be set to "Rear Image" via the sub monitor menu. For how to make the setting, refer to "Rear View Camera Monitor Reverse Interlocking Setting (Optional)" on page (1-113).

Machine Icon

Machine icon refers to the icon of the machine as viewed from directly above it.
Displaying the machine icon on the display helps the operator imagine the orientation of the machine and position of the cab.

MNUD-01-048 ja

Surrounding Image + Rear Image

Display of the surrounding image with the rear view camera image.

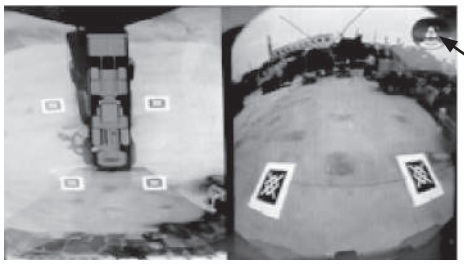

MNUD-01-319-2 ja

Camera Guide Icon

Camera guide icon (1) indicates which camera the displayed image is from.
The arrow in the center of the icon indicates the front of the machine. The images displayed around the icon indicate which camera the image is from.
As illustrated at right, the rear view camera image is displayed on the monitor.

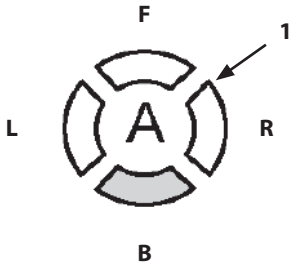

AA-02-14-1 ja

F: Front
B: Rear
L: Left
R: Right

Discrepancies between Images and Actual Road Surface

1. Images of Upslopes or Working Faces

   The illustration at right shows how images appear when the camera is shooting uphill.
   Because point (a) on the upslope is stretched onscreen on an extended line of the plane, the distance from the machine icon is depicted as further than it actually is.

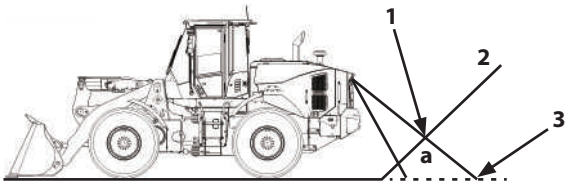

MNTL-01-065-1 ja

1- Actual position of point a
2- Slope
3- Position of point a onscreen

2. Images of Downslopes or Cliffs

   The illustration at right shows how images appear when the camera is shooting downhill.
   Because point (b) on the upslope is shortened onscreen on an extended line of the plane, the distance from the machine icon is depicted as closer than it actually is.

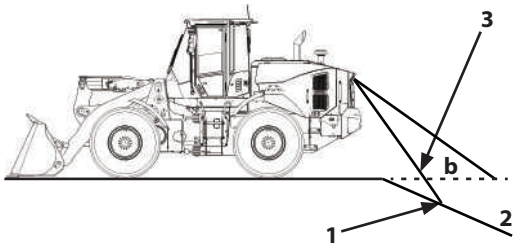

MNTL-01-065-2 ja

1- Actual position of point b
2- Slope
3- Position of point b onscreen

ROPS Cab

ROPS Cab (1) is standard equipment.

1- ROPS Cab
2- Speakers
3- Cab Light (1-221)
4- Digital Radio (1-180)
5- Overhead Switch Panel (Optional) (1-224)

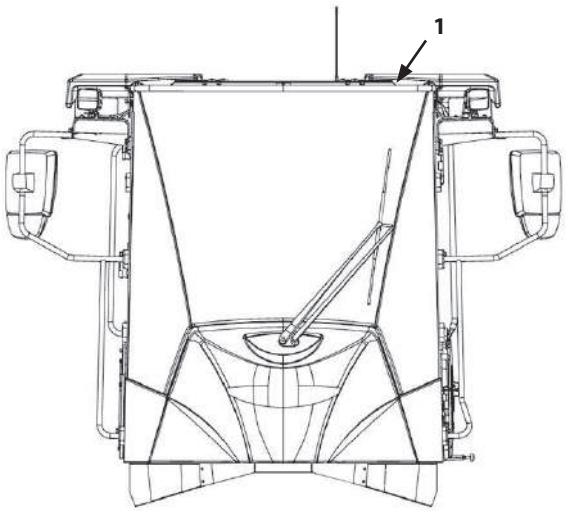

MNTK-01-017-1 ja

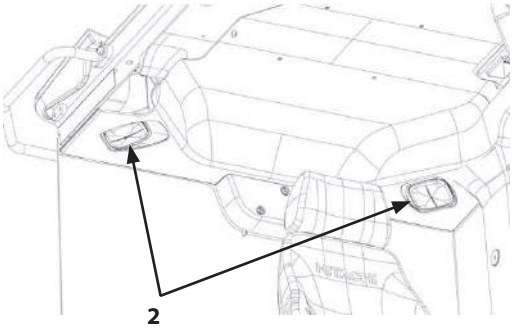

MNTK-01-018-1 ja

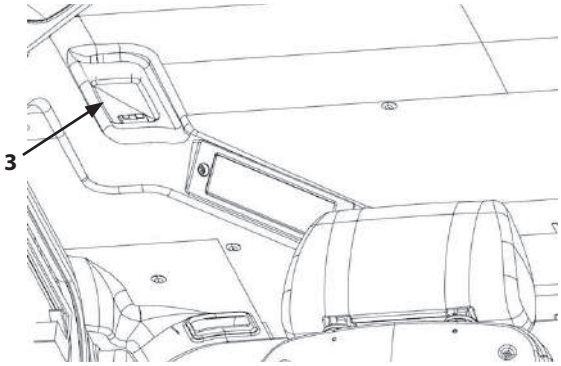

MNTK-01-019-1 ja

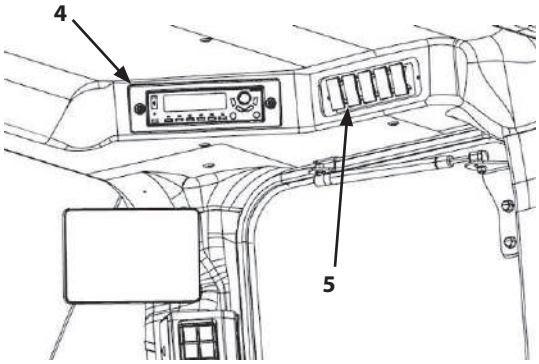

MNTK-01-020-1 ja

6- Sun Visor (1-222)
7- Roll-Up Blind (1-223)
8- Inside Rearview Mirror (1-229)
9- Emergency Evacuation Hammer (1-221)
10- Coat Hook (1-221)

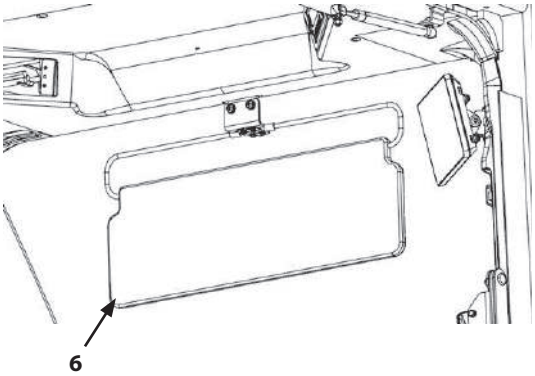

MNTK-01-021-1 ja

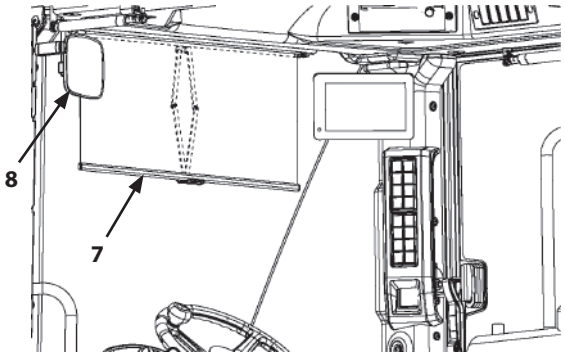

MNUD-01-064-1 ja

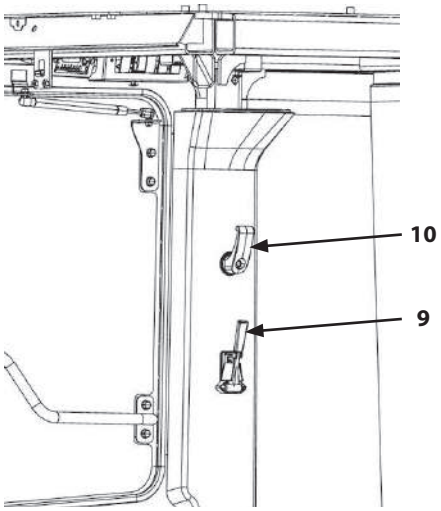

MNTK-01-022-1 ja

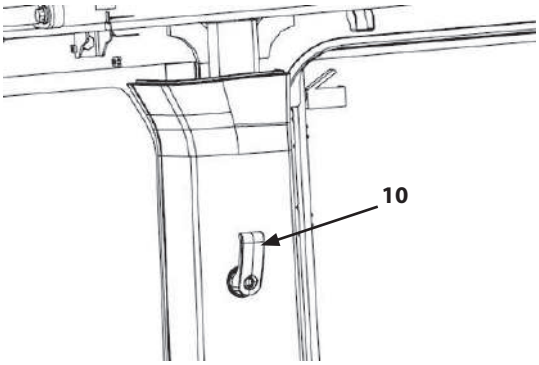

MNTK-01-023-1 ja

Cab Light

Push the room light switch to turn it ON.

ON : Cab light (1) comes and stays ON.

Door : Cab light (1) comes ON when the cab door is opened and goes OFF when it is closed.

OFF : Cab light (1) is OFF.

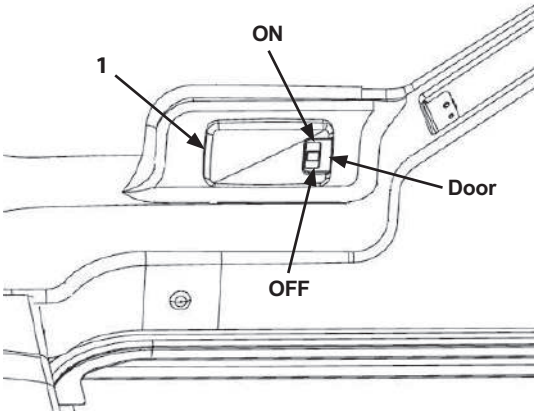

Front Room Light

MNTK-01-024-1 en_GB

Emergency Evacuation Hammer

In case of emergency, if the cab door cannot be opened, use the hammer provided to brake a window and escape.

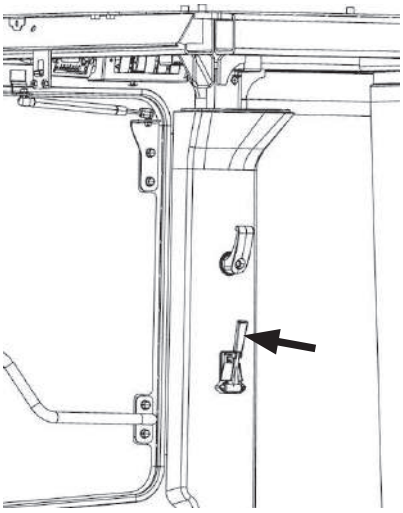

MNTK-01-022-2 ja

Coat Hook

Use to hang your coat, hat, etc.

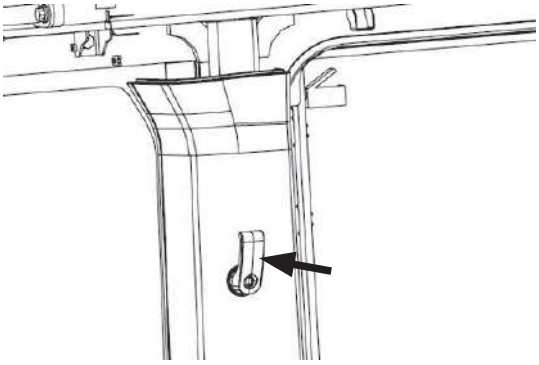

MNTK-01-023-2 ja

Sun Visor

When the sunlight is strong on the top of the cab, lower the sun visor.

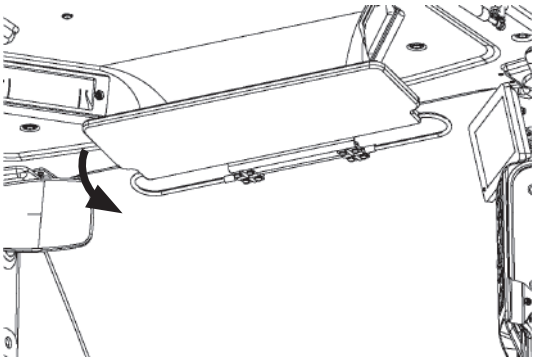

MNUD-01-062-1 ja

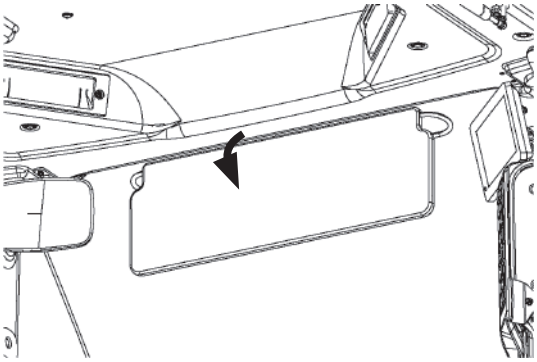

MNUD-01-065-1 ja

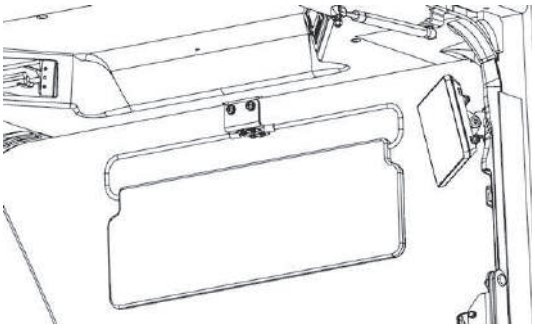

MNTK-01-021 ja

Roll-Up Blind

A roll-up, see-through blind can be installed in place of the sun visor.
When the sunlight is too bright, grasp pull tab (1) on the bottom edge of the blind and pull it down slowly from the top to the desired position (lowers one time).
To roll the blind back up, grasp pull tab (1), lower it slightly and let go. It will roll back up to the top.

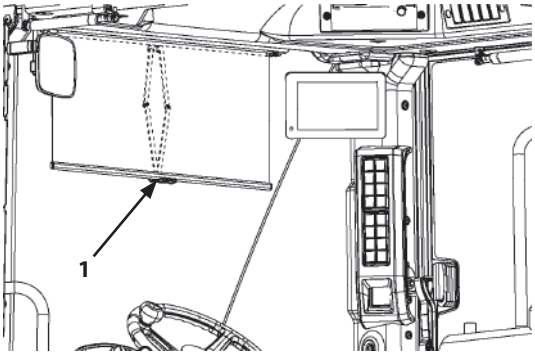

MNUD-01-064-2 ja

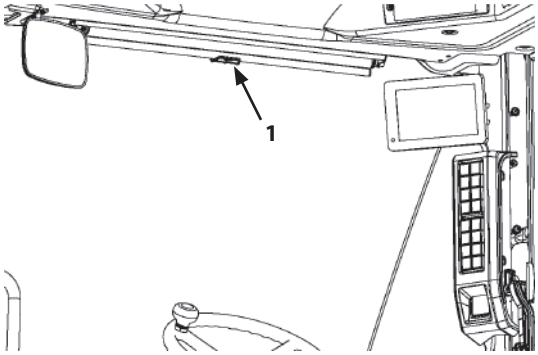

MNUD-01-067-1 ja

Overhead Switch Panel (Optional)

1- Beacon Light Switch (Optional)
2- Rear View Mirror Heater Switch (Optional)
3- Auxiliary
4- Auxiliary
5- Auxiliary

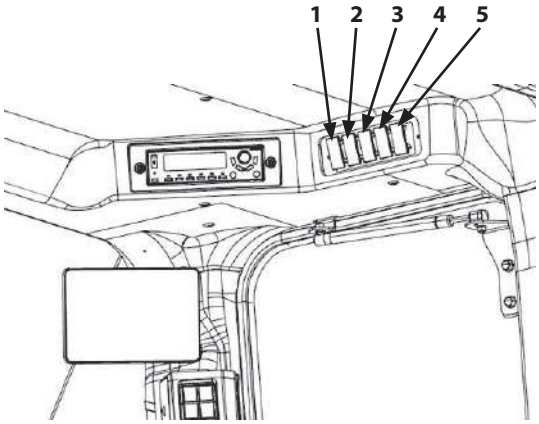

MNTK-01-020-2 ja

Beacon Light Switch (Optional)

Press the top or bottom of the switch to turn the beacon light ON. Indicator (6) lights while the beacon light is operating.
Return the switch to its middle position to turn it OFF.

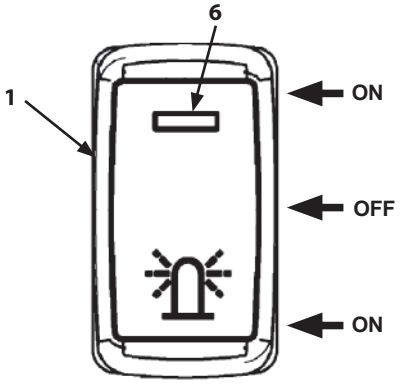

MNUD-01-092-1 ja

Rear View Mirror Heater Switch (Optional)

IMPORTANT

Do not use rear view mirror heater for a long time with the engine stopped. Doing so will drain the battery.
Turn the switch OFF once the mirror is defogged.

Press the bottom of the switch to turn rear view mirror heater ON. Indicator (7) lights while the heater is ON.
Return the switch to its middle position to turn the heater OFF.

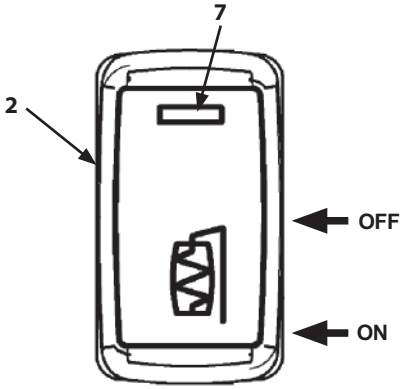

MNUD-01-093-1 ja

Left Cab Door

CAUTION

Close the door securely. Close the door securely after leaving the operator's station as well.

NOTE

If the door is left ajar, the cab light may come ON, depending on the position of its switch, so close the door securely.

1- Door Lock Keyhole
2- Door Open/Close Lever

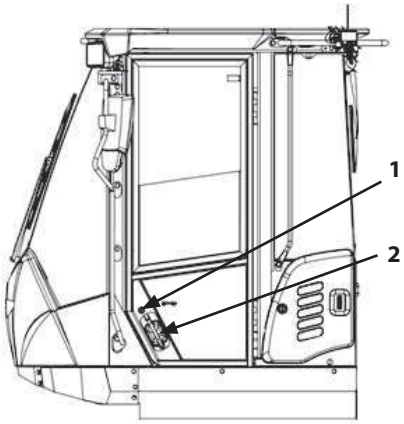

MNTK-01-025-1 ja

Left Door Open/Close Lever

To open the door, lift up door lock knob (3) to unlock it and then pull lever (4).

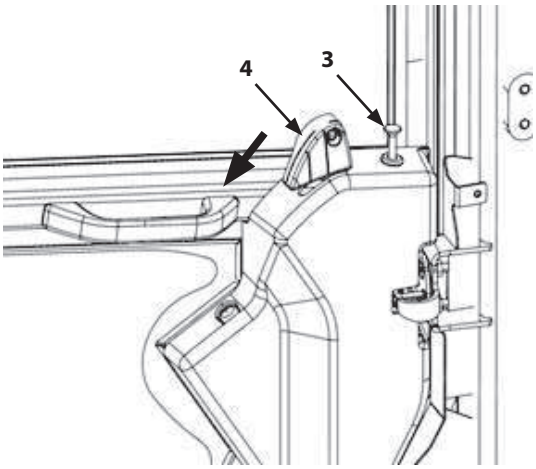

MNTK-01-026-1 ja

Window Lock Levers

Push in both right and left window lock levers (5) at the same time to unlock the window, allowing it to be moved.

Release window lock levers (5) to secure the window; its stoppers engage at the nearest step.

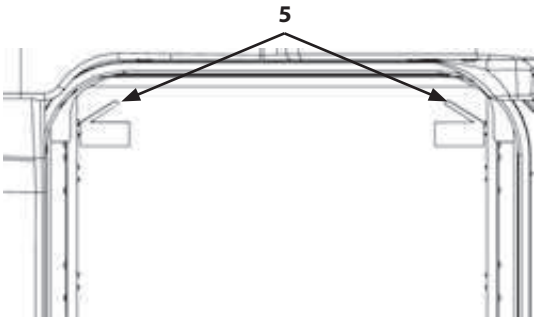

MNTK-01-030-2 ja

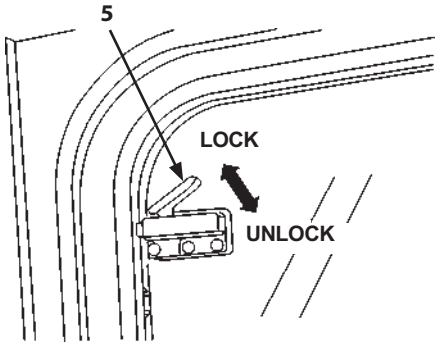

M4EK-01-048-3 en_GB

Fully Opening the Left Door

WARNING

Before climbing up/down using handrail (10) of the door, make sure the door is locked. If the door is not locked securely and the rail is used to climb up/down, it may come unlocked and result in a fall.

Push the door to the outside of the cab when fully opening (180°) it.

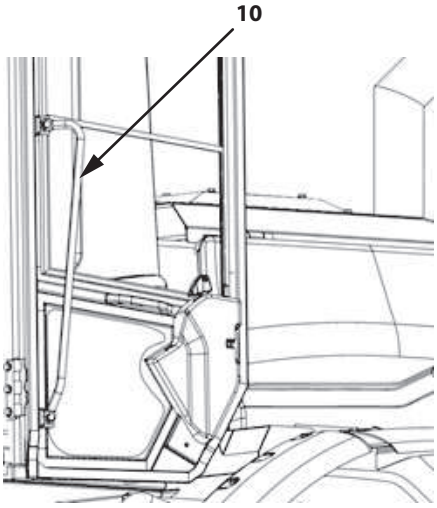

MNTK-01-027-1 ja

Cab Door Release Lever

CAUTION

To keep the door open, open it until it locks securely in latch (9) on the cab. To unlock the door lock, press down door lock release lever (8).

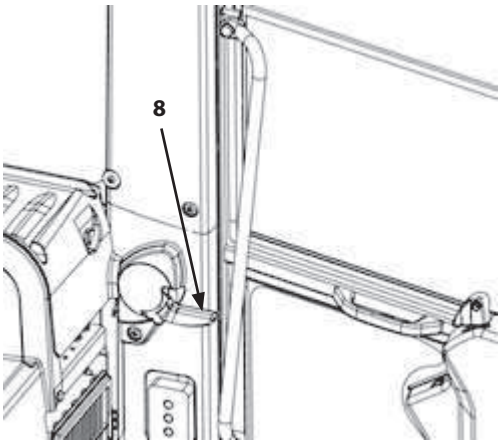

MNTK-01-048-1 ja

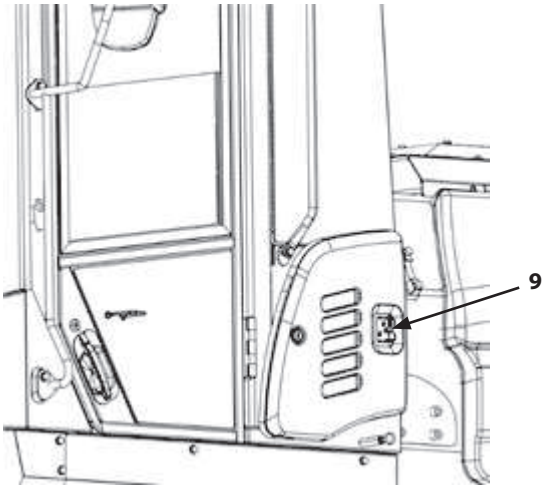

MNTK-01-049-1 ja

Right Cab Door

Right Door Open/Close Lever

To open the right door, move lever (1) to a horizontal position and then press to the stop position.

NOTE

The right door cannot be opened from outside the cab.

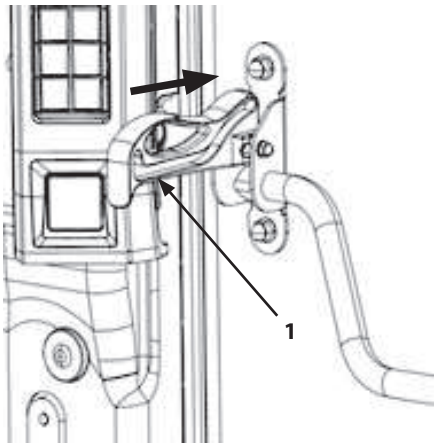

MNTK-01-028-1 ja

Right Door Lock

CAUTION

After closing and locking the door, make sure it is in fact locked.

Push lever (1) down to engage the door lock.

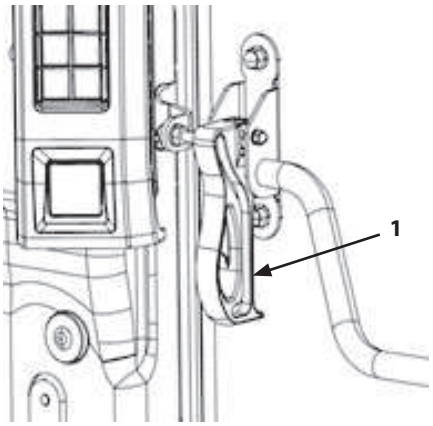

MNTK-01-029-1 ja

Rear View Mirror

Inside Rear View Mirror

Always keep inside rear view mirror (1) clean.

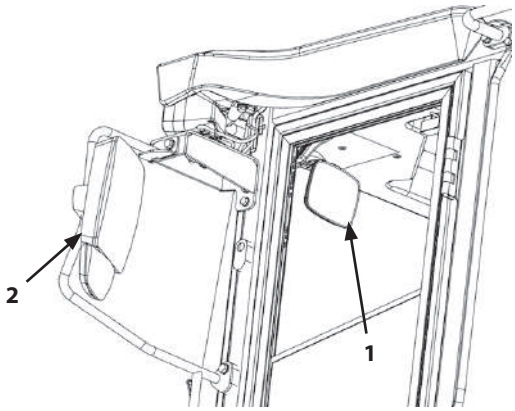

MNTK-01-031-1 ja

Outside Rear View Mirror

WARNING

Do not rely exclusively on rear view mirror (2) when backing up. The rear view mirror should only be used as an aid. Before backing up the machine, always confirm it is safe to do so by turning and looking for yourself.

Always adjust the rear view mirrors after sitting in the operator's seat to ensure good visibility to the rear.
Adjust the mirror so anyone (or an object 1 m high and 30 cm in diameter) standing to the left or right at the back of the machine can be identified.
Always keep mirrors clean.

Rear View Mirrors Angle Adjustment Switch (Optional)

The angle of the outside rear view mirrors can be adjusted with electric adjustment switch (1) (optional). The switch is below switch panel (2).

1. Turn knob (3) of adjustment switch (1) to select the mirror to adjust. Position bar (4) on either the left (L) or right (R) mirror.
2. Tilt knob (3) up or down to change the angle of the mirror up or down.
   Tilt knob (3) left or right to change the angle of the mirror left or right.

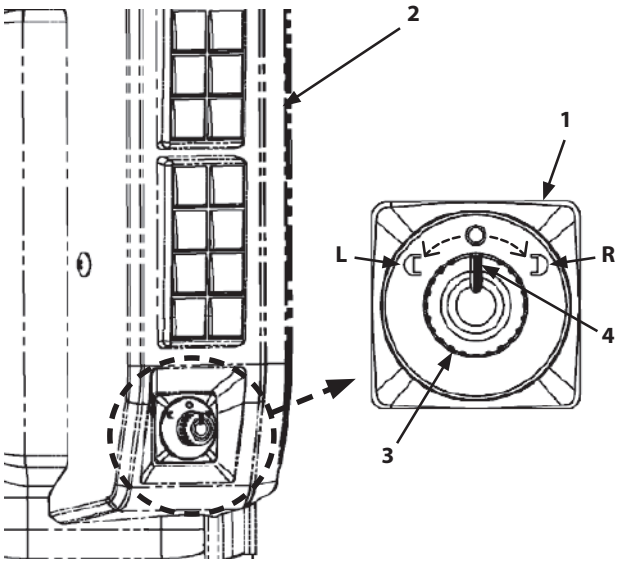

MNUD-01-137-1 ja

Installation and Adjustment of Mirrors

WARNING

- **Adjust the mirrors, referring to the field of vision in the mirrors in the "VISIBILITY MAP" chapter. Perform adjustment with the machine position as shown.**
- **If the mirrors are adjusted improperly, the field of vision cannot be ensured and/or will be obstructed, which may result in serious personal injury.**

Machine Position Image

MNTL-01-066 ja

- **Check the field of vision in the mirrors every day before starting work.**
- **If any of the mirrors are dirty, clean them.**
- **Ensure appropriate footing when adjusting or cleaning mirrors.**

IMPORTANT

- **Mirrors and cameras only act as aids. Before operating the machine, always check the area around the machine thoroughly.**
- **If a modification is made that could restrict the field of vision, it may result in an obstruction to the field of vision, so check the field of vision again.**

Mirror Installation Diagram

The mirror installation locations (1, 2) on this machine are shown in the right.
Adjust the installation locations of each mirror by following the instructions below to ensure safety.
Installation angle and dimension varies depending on the model.

1- Outside Rear View Mirror (Left)
or Rear View Mirror with Close-Proximity Mirror (Left)

2- Outside Rear View Mirror (Right)
or Rear View Mirror with Close-Proximity Mirror (Right)

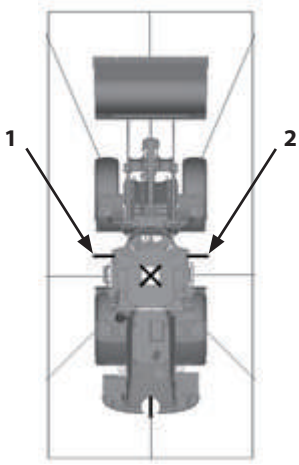

MNTL-01-067-1 ja

- Rear View Mirror with Close-Proximity Mirror (Height)
  Adjust the mirror to the specified position.
  Ensure a wide view from the rear of the machine.

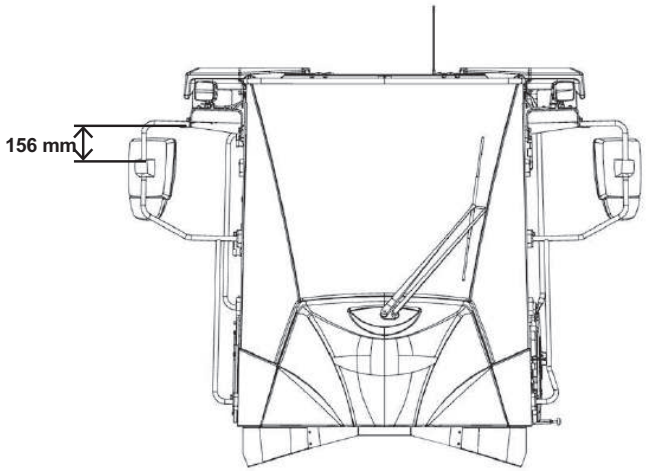

MNTK-01-017-2 ja

- Rear View Mirror with Close-Proximity Mirror (Angle)
  Adjust the mirror to the specified position.
  Changing the angle and positioning as shown on the right, so as to ensure a wide view from the rear of the machine.

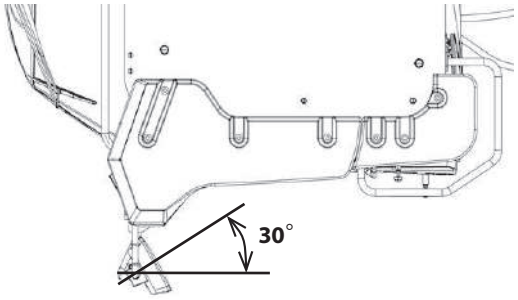

MNTK-01-032-1 ja

Steps

WARNING

Use both hands when getting on/off the machine so your body is supported by 3 points. Getting on/off using less than 3 points is unstable and may result in slipping and/or falling.

Although steps are provided on both sides (L/R) of the machine, use steps (1) on the left to access the operator's station.
The door on the right side cannot be opened from outside the cab. Restrict use of the steps on the right side to escaping in case of emergency and for cleaning the right side camera.

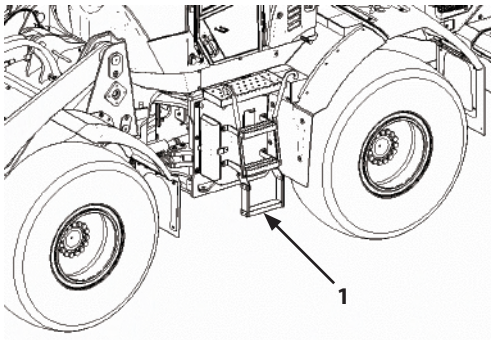

MNTL-01-069-1 ja

Cab Top Rails

WARNING

When walking around the outside of the cab, use steps, rails and support yourself with at least 3 points. Failing to do so may result in slipping and falling.

Cab top rails (2) are installed around the roof of the cab to be held onto during maintenance around the cab, such as of windows, wipers, side cameras, etc.

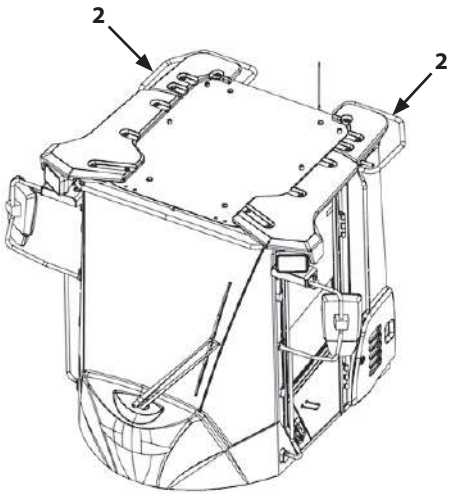

MNTK-01-035-1 ja

Fuse Box

IMPORTANT

If a fuse blows, turn the key switch OFF. Replace the fuse with a new one only after determining and correcting the cause.

Fuses act as safety valves for the electrical system and prevent excessive current from flowing in its circuits. The machine has slow blow fuses (1), (2) and (3).
Capacity varies with the circuit concerned, so only replace with a fuse of the rated capacity.
When inspecting them, check them in the order of fuses A, B, C and slow blow fuses (1), (2), (3).

Slow Blow Fuse Capacity

1- 30A, 70A
2- 30A, 140A
3- 120A, 120A

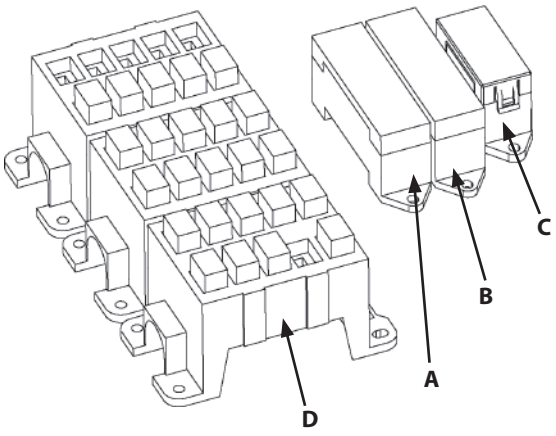

MNUD-07-001-2 ja

A: Fuse Box A
B: Fuse Box B
C: Fuse Box C
D: Relay Boxes

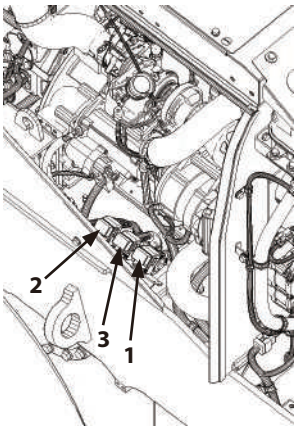

MNTL-01-070-1 ja

Fuse Box A

10- Parking Solenoid
5 A

9- Air Conditioner 1
10 A

8- Stop Lamp, Turn Signal
5 A

7- Back Buzzer
5 A

6- Head Lamp (Left)
5 A

5- Working Lamp Front
20 A

4- Wiper Front
15 A

3- Seat Heater
15 A

2- Head Lamp (Right)
5 A

1- Fuel Pump
5 A

20- Option 4 (ACC4)
(10 A)

19- Option 3 (ACC3)
(10 A)

18- AdBlue Heater
10 A

17- AdBlue Supply Module
15 A

16- AdBlue Sensor
15 A

15- Air Conditioner 2
20 A

14- Rotary Beacon, Quick Coupler
10 A

13- Starter Switch
15 A

12- Option 2 (ACC1, ACC2)
(15 A)

11- GSM/GPS
5 A

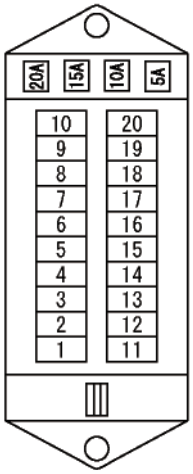

MNTL-01-221 ja

Fuse Box A

Fuse Box B

10- ECU
30 A

9- HST
15 A

8- Controller
10 A

7- Flasher
10 A

6- Horn
10 A

5- HST2
5 A

4- Option 1 (Battery)
(20 A)

3- Room Lamp, DC-DC Unit
20 A

2- Lighting Switch
10 A

1- Radio, USB Power
5 A

20- Switch Control
5 A

19- High Beam Lamp
10 A

18- Wiper Rear
10 A

17- Working Lamp Rear
20 A

16- PLCU
15 A

15- MC Solenoid
10 A

14- Power ON 2
5 A

13- Power ON 1
10 A

12- Position 2
5 A

11- Position 1
5 A

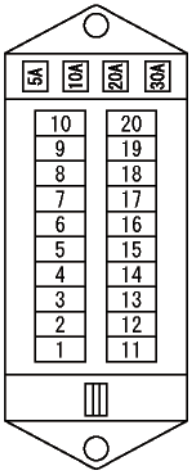

MNTL-01-222 ja

Fuse Box B

Fuse Box C

5- (Open)

4- (Open)

3- (Open)

2- Option 6 (ROD Sensor)
(5 A)

1- (Open)

10- (Open)

9- (Open)

8- Aerial Angle
5 A

7- 12V Socket
10 A

6- 24V Socket
5 A

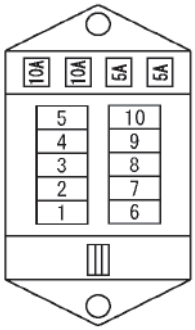

Fuse Box C

MNUD-07-004 ja

Battery Disconnect Switch

IMPORTANT

- **Never turn the battery disconnect switch OFF when the engine is running or the key switch is in any position other than OFF. Doing so may damage the electrical system.**
- **Even after the engine stops, the DEF pump continues to operate, circulating DEF through the pipes. Never turn the battery disconnect switch OFF while the pump is operating. Doing so may damage the SCR system.**
- **Before turning the battery disconnect switch OFF, turn the key switch OFF and wait about 10 minutes until LED indicator (1) goes OFF. Failure to do so may result in malfunction of the electrical system.**

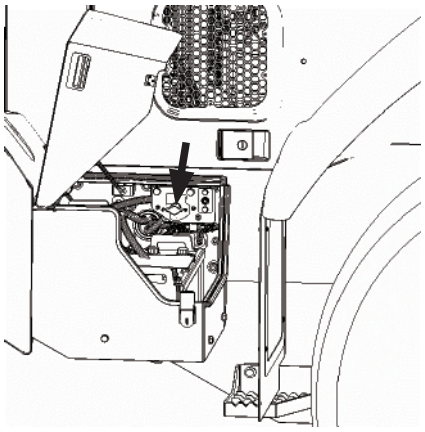

MNTL-01-071-1 ja

NOTE

LED indicator (1) lights for 10 minutes when the key switch is turned from the ON or START positions to OFF or ACC. This is also indicated by an instruction message (2) on the main monitor.

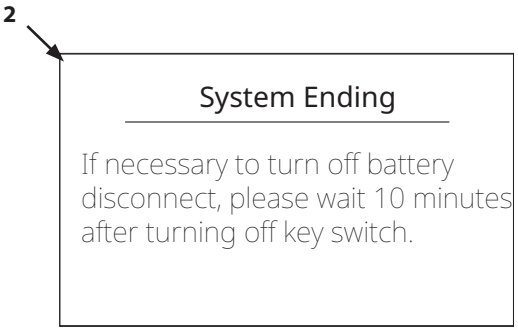

MNUD-03-001-1 en_GB

The battery disconnect switch is different from the key switch used for starting the engine. When the battery disconnect switch is turned OFF, all the circuits in the electrical system are isolated from the battery.

Only use the battery disconnect switch for the following purposes.

- Before maintaining or repairing the electrical system
- Before storing the machine for a long time (storage state)
- Before welding on the machine body
- Before replacing the battery

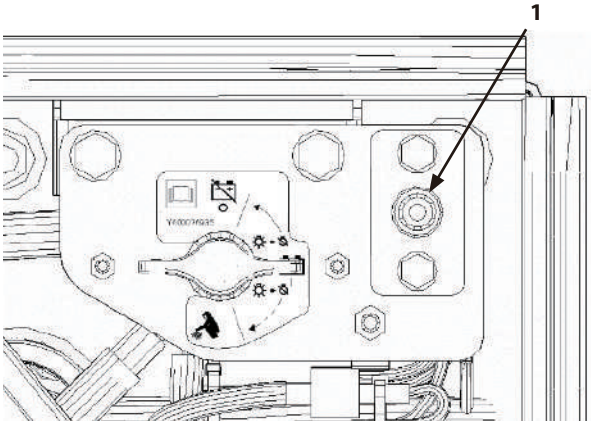

MNTL-01-072-1 ja

Switch Operation

When battery disconnect switch is turned from OFF to ON, radio presets and the clock settings may be lost. If this happens, reset them. To avoid this situation, it is possible to do a “partial” disconnect of the battery, so it continues to provide power to the radio, GSM, etc.

1. Open the battery box cover.
   Battery disconnect switch (2) is ON if lever (1) is horizontal.
2. When lever (1) is turned 70° to the left to the ON-OFF position, battery disconnect switch (2) disconnects power partially. By doing so, power continues to be supplied to the GSM and some controllers, thus eliminating the need to reset monitors, communication data, etc.
3. When lever (1) is turned 70° to the right to the OFF-OFF position, battery disconnect switch (2) disconnects power completely. Use this when welding or shutting down the machine for a long time.
4. Lever (1) can be removed from battery disconnect switch (2) when in either OFF position. After removing lever (1) from switch (2), hang it on hook (3).
5. Close the battery box cover.

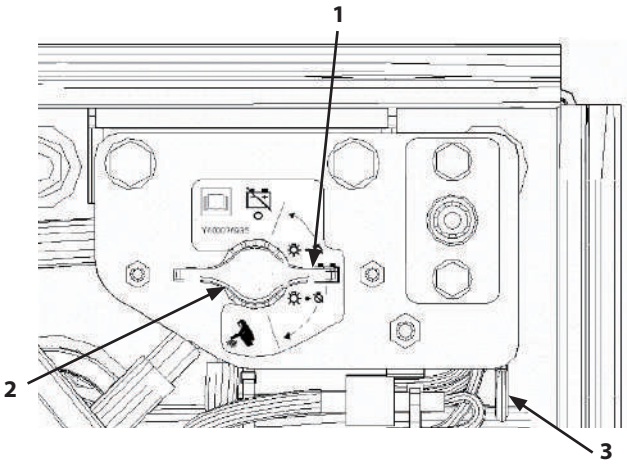

MNTL-01-072-2 ja

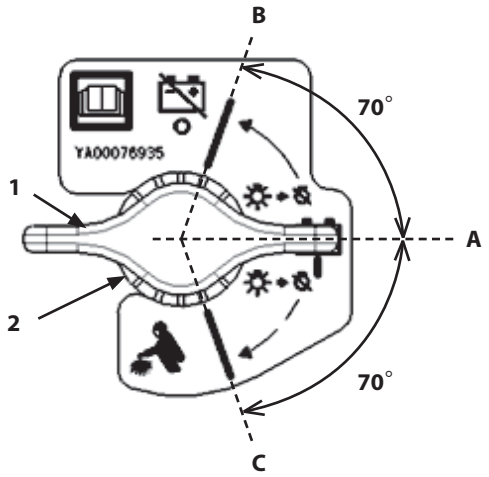

MNTK-01-038-2 ja

A: ON-ON

B: ON-OFF: Partial Disconnection

C: OFF-OFF: Complete Disconnection

Articulation Lock Bar

WARNING

- **Prior to service or transport, engage articulation lock bar (1).**
- **Before driving or working again, disengage articulation lock bar (1) from the front frame and secure it to the rear frame with pin (2), and R cotter pin (3).**

Articulation lock bar (1) is a device for locking the front and rear frames together so they do not articulate during service or transport.

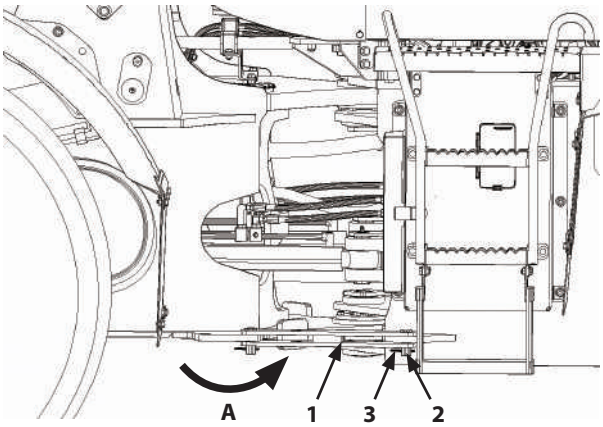

MNTL-01-073-1 ja

A: Lock (Engaged)

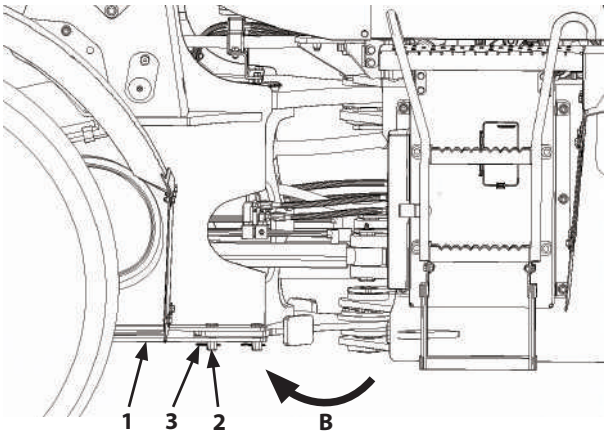

MNTL-01-074-1 ja

B: Unlock (Disengaged)

Inspection/Maintenance Access Side Cover

CAUTION

- **Keep side cover (1) closed when driving or working.**
- **Do not keep side cover (1) open when on a slope or when a strong wind is blowing. It is dangerous if it closes suddenly.**
- **Take care not to get fingers pinched when open/ closing side cover (1).**
- **Side cover (1) may move suddenly when opened. Take care not to be hit.**
- **Secure the side cover with support rod (4) when opening the cover to inspect or work on parts around the engine.**
- **Never get on the fender of machines whose fender (2) is attached to side cover (1).**

To open side cover (1), pull on latch (3).

NOTE

When it will take a long time to inspect the machine with side cover (1) open, secure the side cover with support rod (4) on the inside of side cover (1).
There is a groove on the frame side for securing side cover (1). Secure support rod (4) in the groove beforehand.

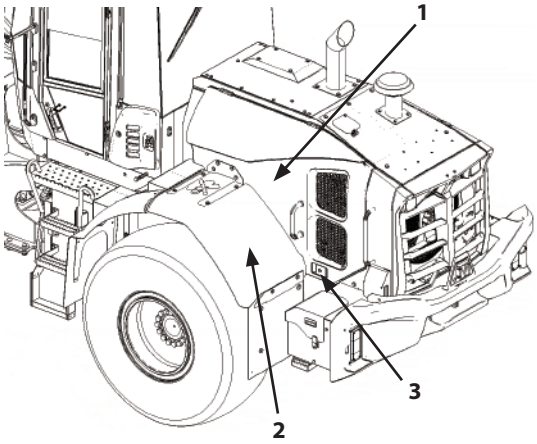

MNTL-01-075-1 ja

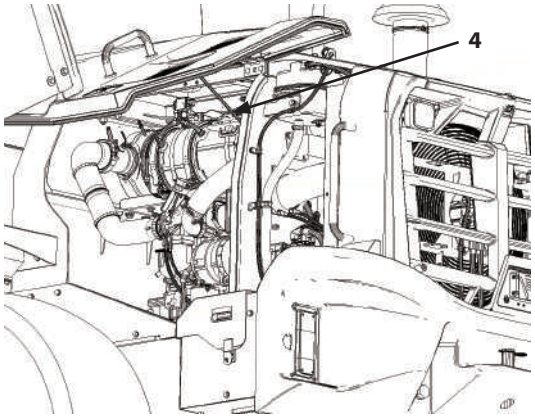

MNTL-01-076-1 ja

Tool Box

Use the tool box for storing tools.

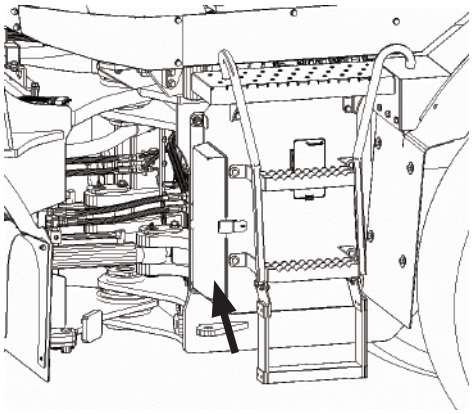

MNTL-01-077-1 ja

Towing Pin

WARNING

As towing is inherently dangerous, only tow things in an emergency.

IMPORTANT

The machine towing capacity is as follows. To avoid excessive tire wear, do not exceed the towing capacity.
ZW140-7 : 85kN (8670 kgf)
ZW160-7: 104 kN (10600 kgf)

- **In the interest of safety, only tow at 5 km/h or less.**
- **Do not tow for more than 5 km.**
- **Do not use this machine to tow another machine.**

Towing pin (4) is mounted on the rear of the machine. It is used for recovering the machine or for securing it to the deck of a trailer for transport. Either tie a tow rope to the pin or make a loop and pass the towing pin through it. Secure the pin with an R cotter pin (5).

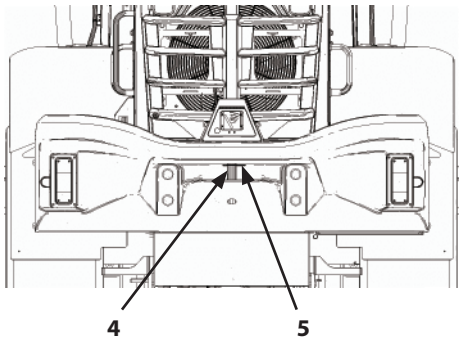

MNTL-01-078-1 ja

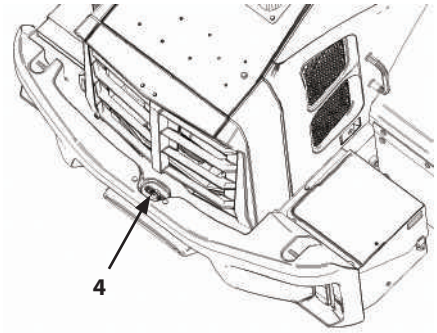

MNTL-01-079-1 ja

Rear Obstacle Detection Sensor

Rear obstacle detection sensor (1) is mounted at the bottom, rear of the machine.
If the position of the enabled F-N-R lever or switch is in reverse "R" and an obstacle is detected at the rear of the machine, graph (2) changes according to the travel speed and the distance to the obstacle. For information on the graph display, refer to "Items Displayed on the Sub Monitor Basic Screen" on page (1-68).
The buzzer can be configured on the sub monitor to sound and warn the operator. For how to make the settings, refer to "Rear Obstacle Alarm Settings ON/OFF (Optional)" on page (1-108).

NOTE

The obstacle detection sensor does not operate when driving backwards after scooping material.

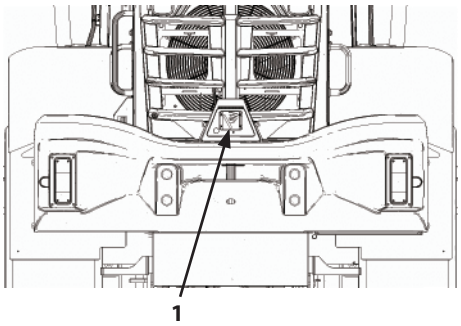

MNTL-01-078-2 ja

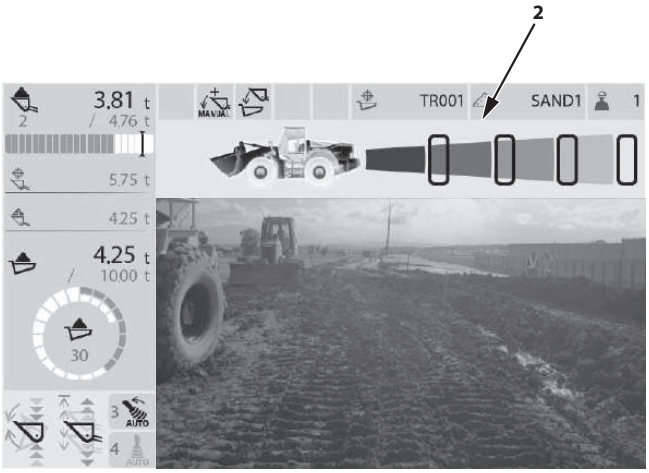

MNTL-01-233-19 ja

Rear Obstacle Detection System (Automatic Speed Reduction) Assist System (Optional)

IMPORTANT

Before starting to drive, check the status of speed reduction system activation/deactivation switch (2).

The system decelerates automatically when it detects an obstacle behind the vehicle while travelling backwards.

It starts decelerating at a distance further from the obstacle the faster the vehicle is travelling.

Also, when the speed reduction system is slowing the vehicle, if the F-N-R lever or switch is operated to any position other than R, it disables speed reduction system operation.

The status of the system can be checked on indicator (1) on the sub monitor.

System status and indicator displays are as shown in the table below.

State	Image
Disabled	
Enabled	
System Operating	Flashing
System Error	Lit red

Operating speed reduction system activation/ deactivation switch (2) turns the function ON/OFF.

When the speed reduction system function is OFF, the system does not operate.

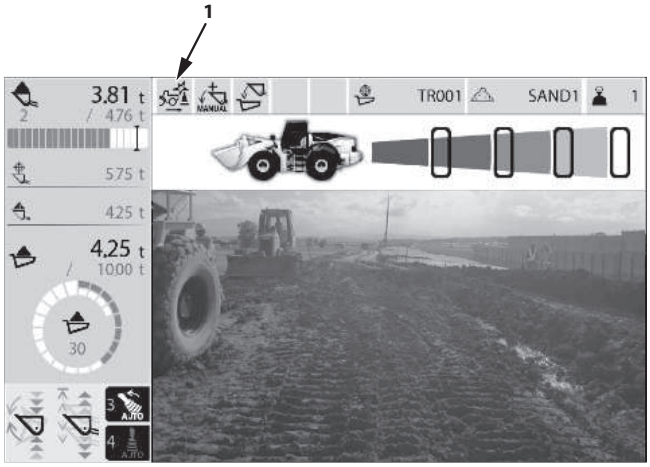

MNTL-01-241-1 ja

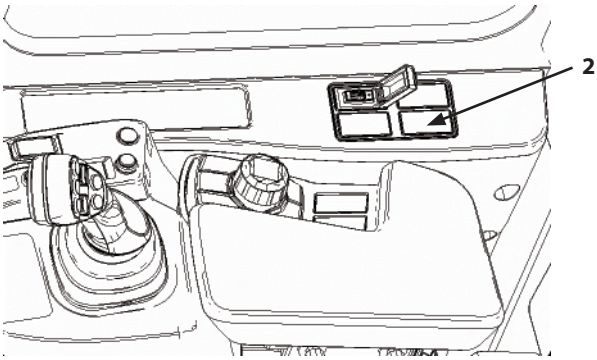

MNTL-01-062-2 ja

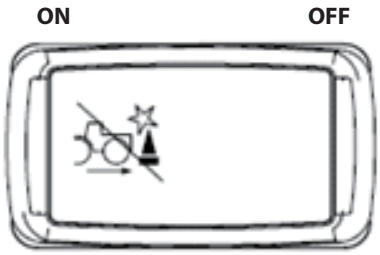

MNTL-01-230-1 ja

IMPORTANT

- **Although this system slows the vehicle when an obstacle behind it is detected, it only slows it slightly and does not guarantee avoiding a collision.**
- **Visually make sure it is safe behind the vehicle before backing up. Do not depend on the speed reduction system when driving.**

Vandal-Proofing Equipment

Locks can be installed on transmission filler cover (1), tool box (2), battery box cover (3), DEF tank cover (4) and expansion tank cover (5).

(to next page)

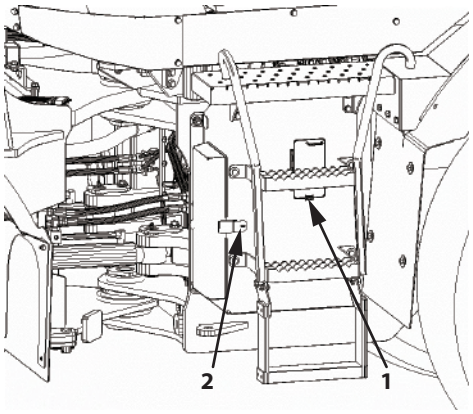

MNTL-01-077-2 ja

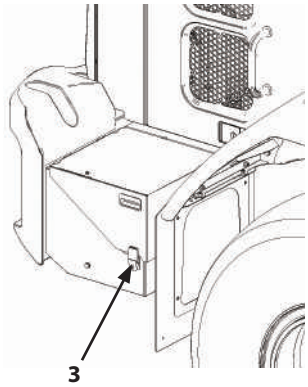

MNTL-01-080-1 ja

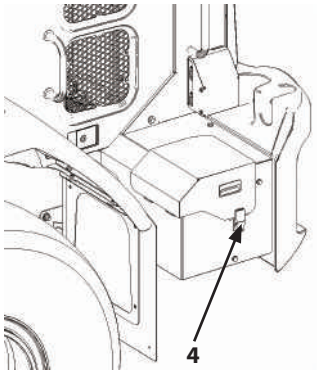

MNTL-01-081-1 ja

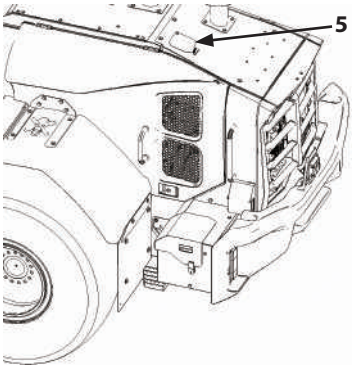

MNTL-01-083-2 ja

Fuel tank cap (6), side cover (7) and AC fresh air filter (8) can be locked with the starter key.

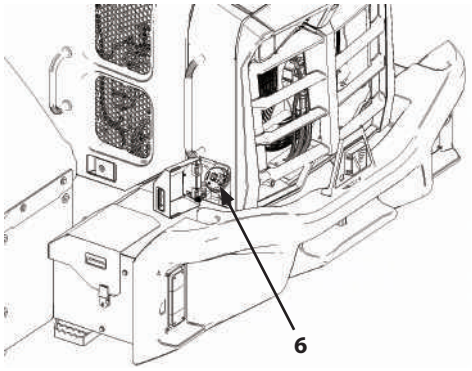

MNTL-01-082-2 ja

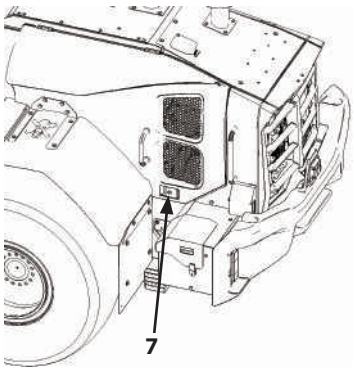

MNTL-01-083-3 ja

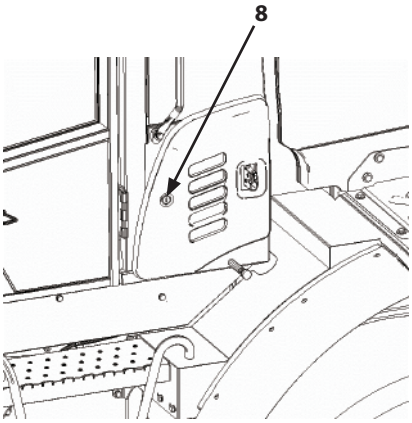

MNTL-01-084-2 ja

BREAK-IN

Observe Engine Operation Closely

IMPORTANT

Use extra caution during the first 100 hours of operation, until you become thoroughly familiar with the sound and feel of your new machine.

1. Do an inspection before starting the engine.
2. After starting the engine, let it warm up properly.
3. When traveling, do not start off suddenly, accelerate suddenly or brake suddenly.
4. Try to perform light-duty work with the front attachment, not heavy-duty work.
5. Check indicator lights and gauges frequently during operation.

Every 8 Hours or Daily

1. Perform 8-hour or daily service.
2. Watch for fluid leaks.
3. Lubricate working tool pivots every 8 hours for the first 50 hours, and every 8 hours when working in mud and water.

After the First 50 Hours

1. Perform 50-hour service.
2. Check accessible hardware torque. (See Hardware Torque Specifications in Maintenance chapter.)

After the First 100 Hours

Perform 50-hour and 100-hour service.

Inspect Machine Daily Before Starting

Perform daily pre-operation pre-work checks before starting the engine.

- Refer to the "Inspection and Maintenance" section for detailed information.

Check Points	Check For
Brake device	The brake pedal depresses the proper amount, brake performance is satisfactory, and brakes are not biased to one side.
	Parking brake performance is satisfactory.
Tires	Tires have the proper tire air pressure.
	No cracks or damage.
	Tires have no abnormal wear.
	Hold no pieces of metal, stones or other foreign objects.
Wheels	Discs and wheels are mounted properly.
Lighting devices and turn signals	Lights up or flashes successfully, not dirty or damaged.
Rearview mirror and reflector	Reflection in mirror is clear.
Reflectors, vehicle registration number display or vehicle license plate	No dirt or damage.
Points where abnormalities were discovered while operating the previous day	No abnormality at the relevant point.
Engine	Levels and dirtiness of engine oil and coolant
	Loose, damaged alternator drive belt
	Ease of starting, exhaust gas color, and noise
	Oil and water leaks, damage to hoses and pipes
	Damaged radiator and oil cooler, clogged core
	Loose and/or missing mounting bolts and nuts
	Check the crankcase breather hose
	Fuel water separator emission
	Confirm the accelerator pedal operation
Chassis	Transmission and accelerator oil leakage
	Check for any remaining fuel, leaks, and contamination in the fuel tank, and for water drainage
	Fuel leaks and damage to fuel hoses and pipes
	Hydraulic oil level, and leaks from hydraulic oil tank
	Operation, play and operating force of all control levers and steering
	Operation of all hydraulic components, oil leaks and damage to pipes and hoses
	Deformity, breakage and abnormal noise at each part
	Window washer fluid
	DEF level, leaks and contamination in DEF tank
	Leaks from DEF piping and hoses
	DEF pump damage
	Dirt around the aftertreatment device

Check Points	Check For
Working Device	Oil leaks and damage to cylinders, pipe lines and hoses
	Check for loose, worn, missing cutting edge
	Wear and damage to the bucket
	Condition of lubrication around wheel loader front attachment
	Damaged pin lock bolts, stoppers and links
	Loose and/or missing mounting bolts and nuts
Miscellaneous	Operating condition of instruments, switches and horn
	Deformed or damaged ROPS cab
	Abnormal outside appearance of machine
	Battery terminal looseness
	Wear and damage of the seat belt
	Damaged steps

Before Starting Engine

1. Check that the battery disconnect switch (1) in the battery box is in the ON-ON position (See the figure on the right). For information about the how to operate the battery disconnect switch, refer to section (1-237) “Battery Disconnector Switch”.
2. Check that the forward/reverse selector switch is not displayed on the monitor. If it is displayed, press forward/reverse selector switch (2) on the panel switch. For information about the how to operate the forward/reverse selector switch, refer to section (1-130) “Forward/Reverse Selector Switch”.

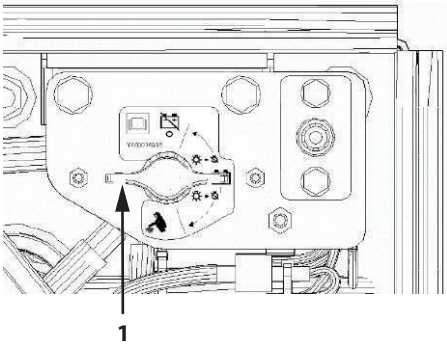

MNTL-03-001-1 ja

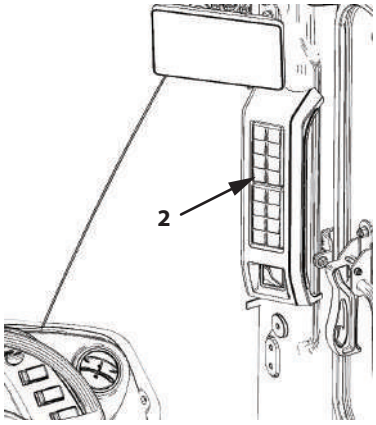

MNTL-01-039-11 ja

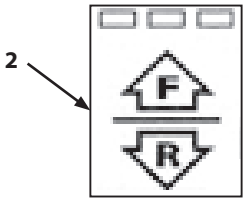

MNUD-01-209-2 ja

3. Check that F-N-R lever (3) and forward/reverse switch (4) are in the neutral (N) position and neutral lever lock (5) is in the LOCK position.

   NOTE

   Unless both F-N-R lever (3) and forward/reverse switch (4) are in neutral (N), the engine will not start. A buzzer will sound and an advice message will be displayed on the sub monitor to check the neutral positions.

4. Check that parking brake switch (6) is in the ON position. After the engine starts and the check for burned out bulbs is completed, check that the parking brake warning indicator stays ON.
5. Check that control lever (7) is in the NEUTRAL position.

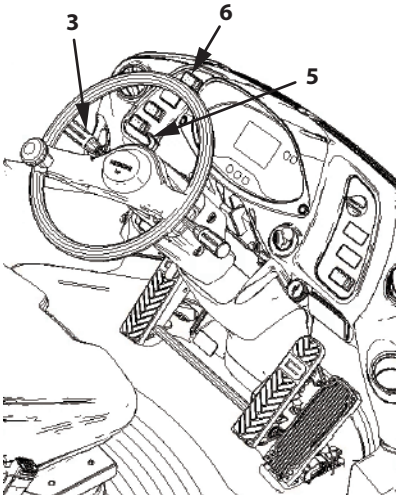

MNTL-03-002-1 ja

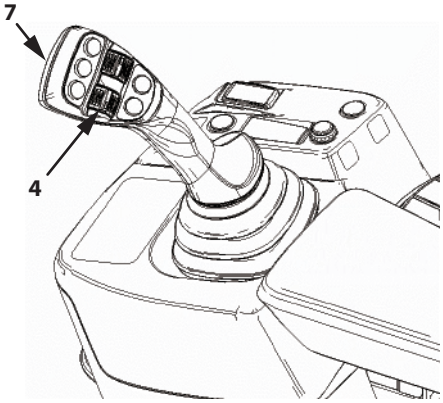

MNTL-01-085-8 ja

6. Check that control lever pilot shut-off switch (9) is in the LOCK position "🔒".

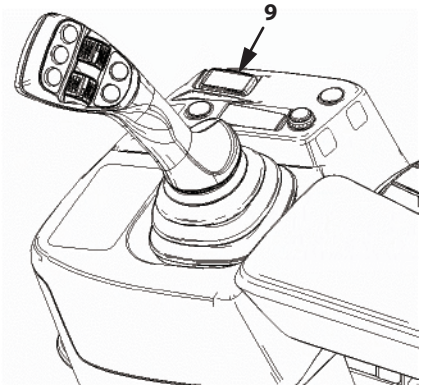

MNTL-03-003-1 ja

7. Adjust the position of outside rear view mirror (10) and room rear view mirror (11) for the best rear visibility. For details on adjusting the mirror positions, refer to section (1-231) "Installation and Adjustment of Mirrors".

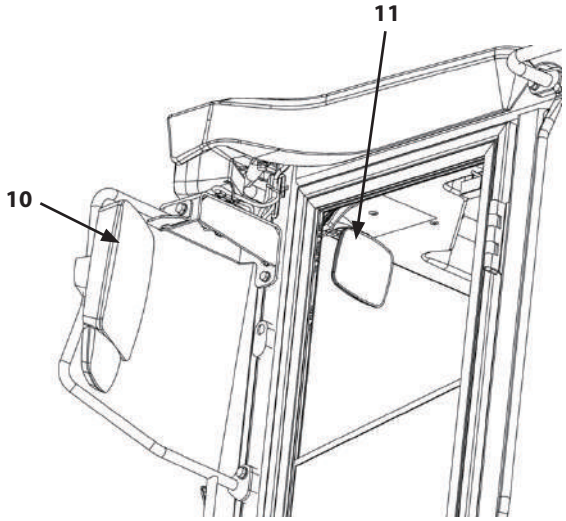

MNTK-01-046-1 ja

8. While seated in the operator's station with your back touching with the backrest, adjust each function of the seat so that the brake pedal can be fully pressed down. For details on adjusting the seat, refer to section (1-166) "Operator's Station Adjustments".

9. Adjust the steering column height and inclination for optimal operator ergonomics.

WARNING

Do not operate the tilt, telescopic lever (12) and steering column pop-up pedal (13) while driving the machine.

CAUTION

Do not drive the machine while moving the steering column to the up position.

For how to adjust the steering column height and inclination, refer to section (4-9) “Tilt, Telescopic Lever/ Steering Column Pop-up Pedal”.

10. Fasten seat belt (14).

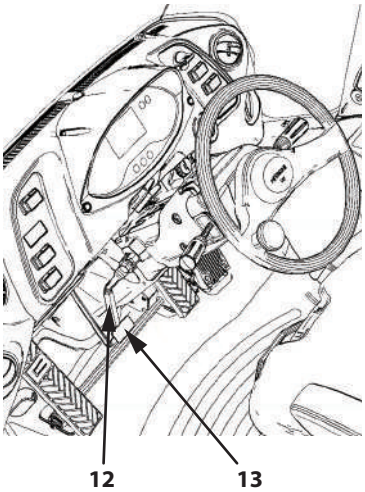

MNTL-03-004-1 ja

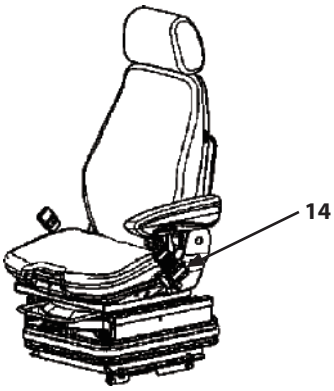

MNUD-01-049-1 ja

Starting the Engine

Starting the Engine at Normal Temperature

Start the engine in the following order. Start the engine without pressing down (do not depress) accelerator pedal (1).

1. Check that forward/reverse lever (2) and forward/reverse switch (3) are in the neutral (N) position and neutral lever lock (4) is in the LOCK position.
2. Check that parking brake switch (5) is in the ON position.
3. Turn key switch (6) to the ON position.
4. Bulb burnout inspection
   When key switch (6) is turned ON, all indicators and the warning lights stay lit for 2 seconds then go out. If any indicator and/or warning light fails to light, that bulb is burned out.
   However, the indicator for brake oil pressure (7) (when the brake oil pressure is low) will continue to stay lit, and it will turn OFF only after the engine is started.
   Preheating will automatically start when the key switch is turned ON. Preheat indicator (9) will automatically light up.

   NOTE

   When the key is turned ON, the maintenance item having an expired maintenance interval displays on the monitor screen for 5 seconds. The screen will turn OFF when selector button (11) is pressed, or if forward/reverse lever (2) or forward/reverse switch (3) is set in FORWARD (F) or REVERSE (R) position.

5. Check that parking brake indicator (10) is lit. When preheat indicator (9) turns OFF, the engine has preheated. Sound the horn to warn those near the machine.

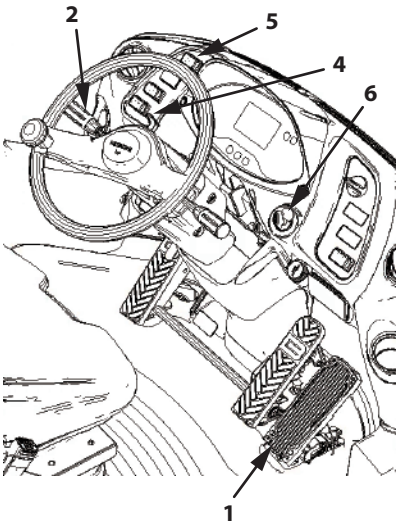

MNTL-03-002-2 ja

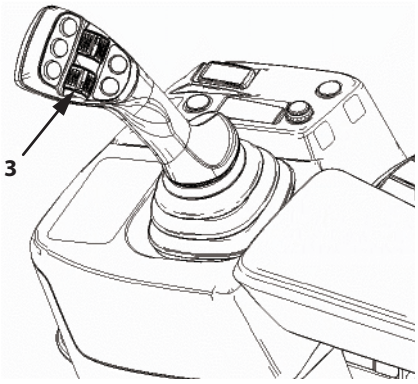

MNTL-01-085-7 ja

MNTL-01-094-5 ja

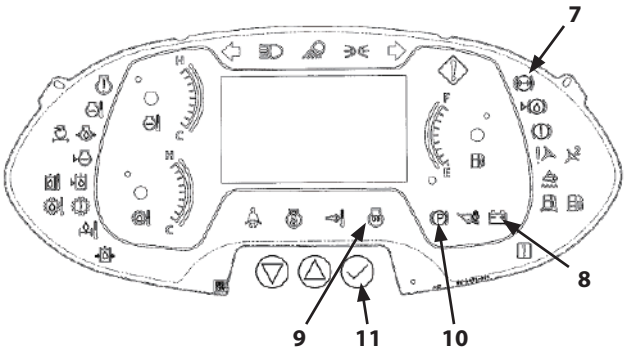

MNUD-01-030-11 ja

IMPORTANT

Do not continuously crank the starter more than 10 seconds. If the engine fails to start, return the key switch to the OFF position. Wait for at least 2 minutes, then start the engine again.
Failure to do so may damage the starter and/or cause the batteries to discharge.

6. Turn key switch (6) to the START position to rotate the starter. The engine will start.
   Do not operate (depress) accelerator pedal (1) when starting the engine.
7. Release the key right after the engine starts.
   The key will automatically return to the ON position.
   After the engine starts, let the engine idle without depressing accelerator pedal (1) to warm up the machine.

MNTL-01-094-5 ja

IMPORTANT

Right after the engine starts, the engine speed will be kept at idling speed for a maximum 30 seconds when the coolant temperature, hydraulic oil temperature or transmission oil temperature is low, or for 3 seconds at normal temperature even if accelerator pedal (1) is depressed.

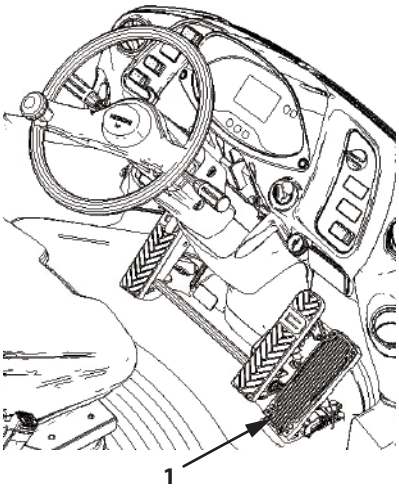

MNTL-03-002-3 ja

WARNING

After starting the engine, start driving or operating the machine only after confirming that the engine speed changes by pressing down on accelerator pedal (1).
Otherwise, the machine and/or the front attachment may unexpectedly start moving, possibly causing a collision or other accident.

NOTE

- *When the engine is started, the system activation sound emits to automatically check the emergency steering system. (Machine equipped with emergency steering system)*
- *White smoke may come from the exhaust pipe for several minutes after the engine starts, this is not a malfunction.*

Starting in Cold Weather

Preheating

1. Turn key switch (1) to the ON position. The ambient temperature sensor detects the outside air temperature so that the engine is automatically preheated.
2. Preheat indicator (2) comes ON. As long as the preheat indicator stays ON, the engine is being heated.

   NOTE

   The preheating time will depend on the ambient temperature.

3. As soon as preheat indicator (2) goes OFF, turn key switch (1) to the START position to rotate the starter. Release the key switch right after the engine starts. The key switch will automatically return to the ON position.
   Do not press down accelerator pedal (3) when starting the engine.
   After the engine starts, let the engine idle without depressing accelerator pedal (3) to warm up the machine.
   After starting the engine, perform the warm-up operation. For details on how to perform the warm-up operation, refer to section (3-15) "Warm-up Operation" or section (3-16) "Warm-up Operation during Cold Weather".

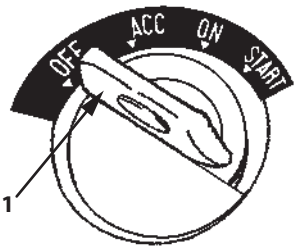

MNTL-01-094-1 ja

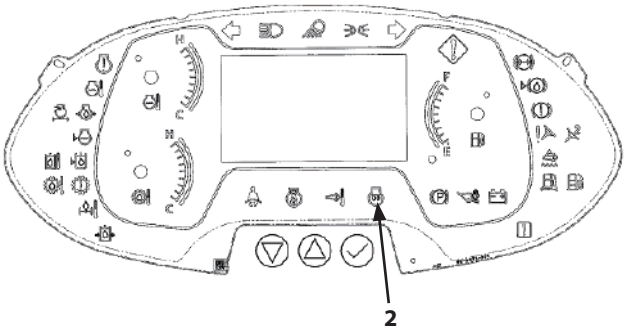

MNUD-01-030-12 ja

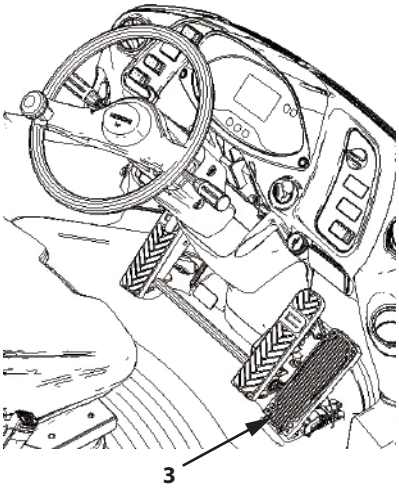

MNTL-03-002-4 ja

IMPORTANT

Right after the engine starts, the engine speed will be kept at idling speed for a maximum 30 seconds when the coolant temperature, hydraulic oil temperature or transmission oil temperature is low, or for 3 seconds at normal temperature even if accelerator pedal (3) is depressed.

WARNING

After starting the engine, start driving or operating the machine only after confirming that the engine speed changes by pressing down on the accelerator pedal (3).
Otherwise, the machine and/or the front attachment may unexpectedly start moving, possibly causing a collision or other accident.

NOTE

Headlights, cab lights and other components that light up may dim during the engine preheat operation in cold temperatures.

Check Instruments After Starting

IMPORTANT

If any abnormality is found on the monitor unit, immediately stop the engine. Inspect the cause of the problem.

Checking Monitor Functions

1. Check that discharge warning indicator (1) is OFF.
   If discharge warning indicator stays ON, immediately stop the engine. Inspect the alternator and battery system for any abnormality.
2. Check that engine oil pressure indicator (2) is OFF.
   If engine oil pressure indicator stays ON, immediately stop the engine. Inspect the engine hydraulic system and the oil level.
3. Check that engine coolant temperature gauge (3) is within the normal range (green).

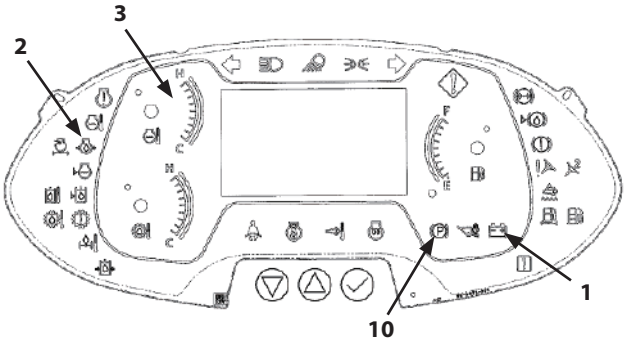

MNUD-01-030-13 ja

NOTE

When the key switch is turned ON, for about 2 seconds all indicators and warning lamps light up and the buzzer sounds, as a check to see if lamp(s) are burnt out or if the buzzer is malfunctioning.

Check Engine Noise and Exhaust Gas Color

Check that the engine noise and exhaust gas color are normal.

NOTE

Check the exhaust gas color as follows. (After warm-up operation, run the engine under no load.)

Clear or light blue	:	*Normal (Perfect combustion)*
Black	:	*Abnormal (Imperfect combustion, abnormal aftertreatment device, abnormal fuel system)*
White	:	*Abnormal (Oil is leaking into the combustion chamber, abnormal aftertreatment device, abnormal fuel system)*

NOTE

White smoke may be emitted for several minutes after the engine starts, this is not a malfunction.

Selecting Operator's Setting

The operator setting screen appears on the sub monitor after the starting screen. The stored operator settings for each operator No. are applied to the machine by selecting the desired operator No.

NOTE

For details on the operator setting screen, refer to section (1-81) "Operator Setting Screen".

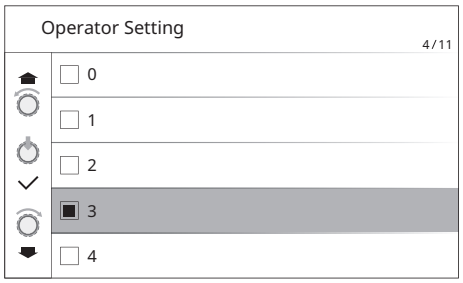

MNUD-01-254 en_GB

1. Rotate selector knob (1) to highlight a desired operator No.
2. Press selector knob (1) and the check box for the selected No. is enabled. The machine status is updated with the stored settings for the selected operator No.

   NOTE

   Pressing back switch (2) while the operator setting screen is displayed will move to the main menu screen.

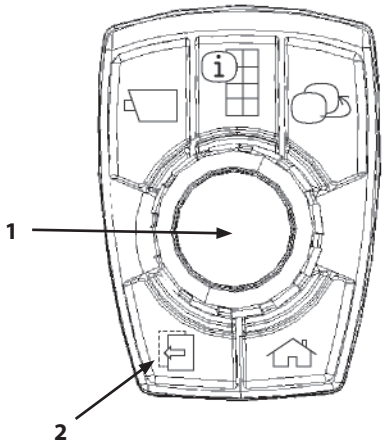

MNUD-01-252-1 ja

Checking Maintenance Items

If any periodic maintenance item is requested within 20 hours, the maintenance notification screen is displayed for about 5 seconds before displaying the basic screen. Check and perform the requested maintenance. For details on the maintenance notification screen, refer to section (1-54) "Maintenance".

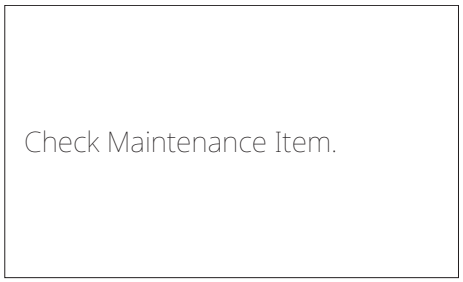

MNUD-01-035 en_GB

NOTE

This screen does not appear if the maintenance notification function is turned OFF via the main monitor menu. For details on how to turn ON the maintenance notification function, refer to section (1-56) "Maintenance Notification".

Using Booster Cables

IMPORTANT

The electrical system of the machine is 24 volt DC. Only jump from a machine with a 24 volt DC system that has enough extra capacity.

SA-032 ja

⚠ WARNING

- **An explosive gas is produced while batteries are in use or being charged. Keep open flames and sparks away from the battery area. Do not continue to use or charge the battery when electrolyte level is lower than specified. Explosion of the battery may result.**
- **Park the machine and the machine providing the jump on a dry or concrete surface, not on steel plates. If machines are parked on steel plates, it may cause sparking unexpectedly.**
- **Never connect a positive terminal to a negative terminal. Doing so may cause a short. Doing so may cause a short.**

When the machine's batteries are dead, start the engine by connecting booster cables to the batteries of the jumping vehicle as shown below.

Connecting Booster Cables

1. Stop the engine of the machine providing the jump.
2. Turn the battery disconnect switch to the OFF-OFF position.
3. Connect one end of (red) booster cable (1) to the positive (+) terminal of the batteries of the machine that will be started, and the other end to the positive (+) terminal of the booster batteries for the machine providing the jump.
4. Turn the battery disconnect switch to the ON-ON position.
5. Connect one end of (black) booster cable (2) to the negative (-) terminal of the booster batteries of the machine providing the jump, and then connect the other end of the black cable to ground (3) on the body of the machine that will be started.
   As sparks may fly when the last connection is made, connect the cable as far away from batteries as possible.
6. After securely connecting the booster cables, start the engine of the machine providing the jump.
7. Start the engine of the machine with the dead batteries.
8. After the engine starts, disconnect booster cables (2) and (1). For the disconnection procedure, refer to section (3-14) “Disconnecting the Jumper Cables”.

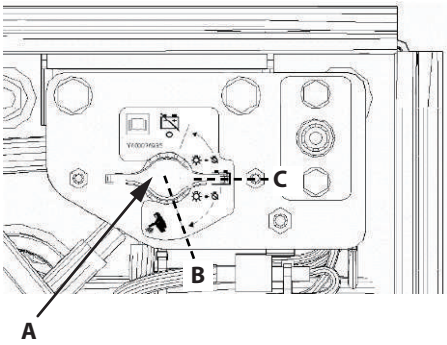

MNTL-03-001-2 ja

A: Battery Disconnect Switch
B: OFF-OFF
C: ON-ON

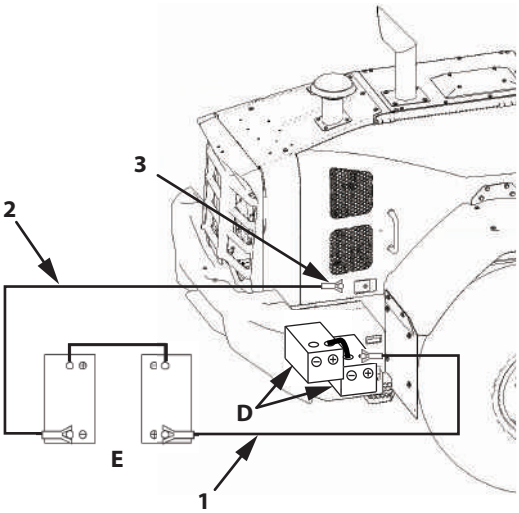

MNTL-03-005-1 ja

D: Batteries Being Jumped
E: Batteries of Machine Providing Jump

Disconnecting the Jumper Cables

1. Disconnect (black) booster cable (2) from the machine body ground (3).
2. Disconnect the other end of black negative (-) cable (2) from the battery of the machine providing the jump.
3. Disconnect red positive (+) cable (1) from the positive terminal of the machine providing the jump.
4. Disconnect red positive (+) cable (1) from the positive terminal of the machine's battery.

IMPORTANT

Make sure to connect and disconnect booster cables (1) and (2) following the steps described above. Connect booster cable 1, then connect booster cable 2. If the 2 cables are held at the same time, it could lead to a short circuit.

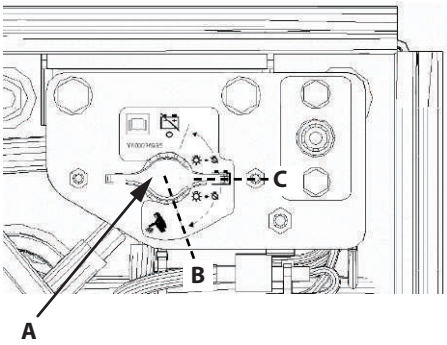

MNTL-03-001-2 ja

A: Battery Disconnect Switch
B: OFF-OFF
C: ON-ON

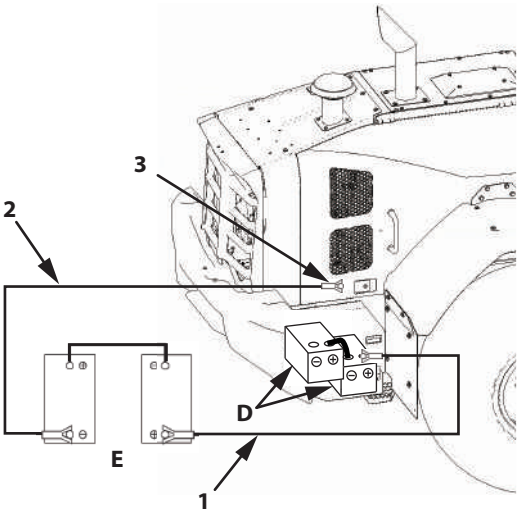

MNTL-03-005-1 ja

D: Batteries Being Jumped
E: Batteries Providing Jump

Warm-Up Operation

IMPORTANT

Right after the engine starts, the engine speed will be kept at idling speed for a maximum 30 seconds when the coolant temperature, hydraulic oil temperature or transmission oil temperature is low, or for 3 seconds at normal temperature even if accelerator pedal (1) is depressed.

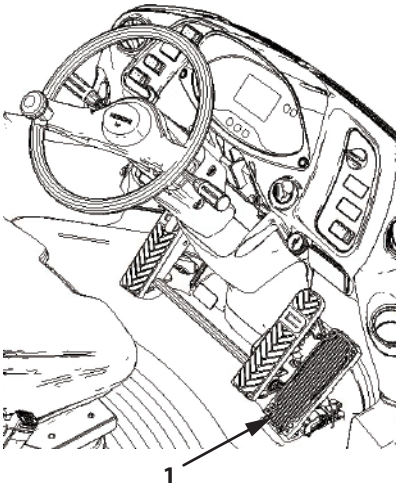

MNTL-03-002-3 ja

WARNING

After starting the engine, start driving or operating the machine only after confirming that the engine speed changes by pressing down on the accelerator pedal (1). Otherwise, the machine and/or the front attachment may unexpectedly start moving, possibly causing a collision or other accident.

CAUTION

- **Operating the machine without warming it may cause engine seizure and damage, and may cause damage to hydraulic components. Be sure to warm up the machine not only to prevent accidents due to poor hydraulic component motion, but also to ensure safe operation.**
- **Periods of idling lasting more than 10 minutes can cause poor engine performance.**
- **Do not idle for excessively long periods. Observe local engine idling regulations.**

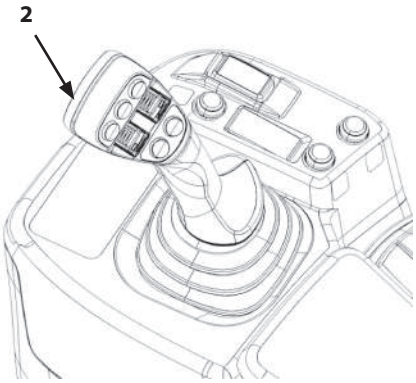

MNTL-03-006-1 ja

If the machine is operated suddenly with the hydraulic oil temperature below 20°C, the hydraulic components may be damaged. Start the engine. Then, without operating the machine, warm up the machine properly until the hydraulic temperature reaches about 20°C using the steps below.

1. Let the engine idle for about 3 to 5 minutes with no load without operating (pressing down) accelerator pedal (1).
2. Rev the engine at medium speed. Raise the bucket off the ground and keep control lever (2) tilted up for 10 seconds. (Only operate the control lever at this time.)

CAUTION

Repeated operation of control lever (2) could produce an abnormal surge pressure, possibly damaging the hydraulic components.

Warm-Up Procedure in Cold Weather

IMPORTANT

Right after the engine starts, the engine speed will be kept at slow idle speed for a maximum 30 seconds even if accelerator pedal (1) depressed.

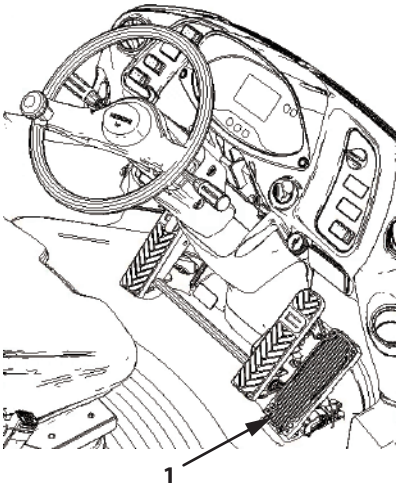

MNTL-03-002-3 ja

WARNING

After starting the engine, start driving or operating the machine only after confirming that the engine speed changes by pressing down on accelerator pedal (1). Otherwise, the machine and/or the front attachment may unexpectedly start moving, possibly causing a collision or other accident.

CAUTION

- **If the hydraulic oil temperature is cold, perform the warm-up operation and wait until the work equipment operating speed is normal before operating the machine. Operating the machine without first warming it may cause engine seizure and damage, and/or damage to hydraulic components. Be sure to warm up the machine not only to prevent accidents due to poor hydraulic component motion, but also to ensure safe operation.**
- **Periods of idling lasting more than 10 minutes can cause poor engine performance.**
- **Do not idle for excessively long periods. Observe local engine idling regulations.**

NOTE

Headlights, room lights and other components that light up may dim during the engine preheat operation in cold temperatures.

If the "Warm-Up Setting" in the sub monitor setting menu is set to ON, the engine speed automatically increases from slow idle to 1000 min^{-1} (rpm) rpm and enters warm-up mode.

- Hydraulic oil temperature is 0°C or less
- Engine coolant temperature is 30°C or less
- Outside air temperature is 0°C or less
- Operator's station temperature is 5°C or less

NOTE

- *The warm-up mode is activated automatically when the temperature conditions are satisfied, not only at engine start up.*
- *For details on how to do the warm up setting, refer to "Warm Up Setting ON/OFF" on page (1-110).*

The warm-up mode is automatically canceled, and the engine returns slow idle mode.

- Hydraulic oil temperature is 30°C or more
- Engine coolant temperature is 40°C or more

NOTE

The engine speed will increase to 1100 min^{-1} (rpm) and the temperature setting that cancels the warm-up operation may differ based on the setting for extremely low temperature conditions. Contact Authorized Dealer.

IMPORTANT

Do not subject the engine to sudden acceleration until after the warm-up period ends.

1. Let the engine idle without load for about 5 to 10 minutes.
2. Run the engine at a medium speed for 5 minutes.

   NOTE

   At this time, do not run the engine at high or low speed. Begin operating the machine after the needle of coolant temperature gauge (2) starts to move. Under certain conditions, increasing to medium speed may not be possible.

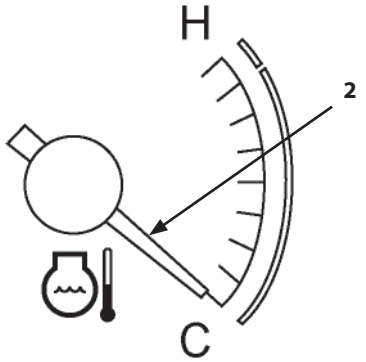

MNUD-01-014-2 ja

3. Slowly extend the bucket cylinder to fully stroke end by operating control lever (3).

   NOTE

   When extending control lever (3), do not continuously operate it for more than 10 seconds.

4. Slowly retract the bucket cylinder to full stroke end.

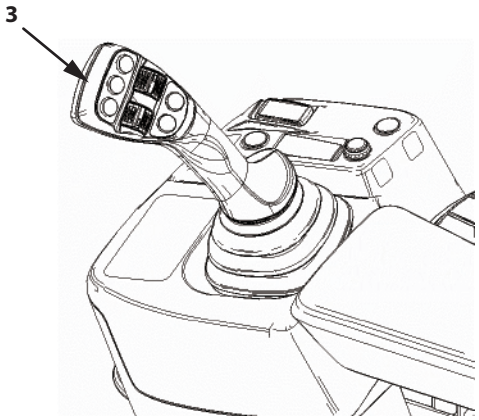

MNTL-03-003-3 ja

CAUTION

Do not continuously operate control lever (3) after retracting the bucket cylinder to stroke end.

5. Repeat steps 3 and 4 above until the bucket cycle time is normal. Run the engine at medium speed for longer to warm the machine when the air temperature is 0°C or less.
6. Run the engine at slow idle.
7. Slowly turn the steering wheel until the steering cylinder is close to the stroke end.
8. Slowly turn the steering wheel in the opposite direction, until the steering cylinder is close to the stroke end.
9. Repeat steps 3 to 8 five times.

Stopping the Engine

Stop the engine in the following order.

IMPORTANT

Never attempt to stop the engine while traveling.
If the engine stops, the steering wheel may become inoperable, or it may cause other malfunctions or seizure of parking brake.

1. Before stopping the engine, lower the bucket so it sits level on the ground.

MNTL-01-094-1 ja

IMPORTANT

This machine has an engine equipped with a turbocharger. If it is stopped without first performing the cool down operation, the lubricant on the turbocharger bearing may dry out due to the intense heat inside the turbocharger, possibly causing damage to the turbocharger.

2. Run the engine at slow idle (cool down) for 5 minutes.
3. Turn key switch (1) to OFF to stop the engine.
4. Press LOCK "🔒" side of control lever pilot shut-off switch (2).

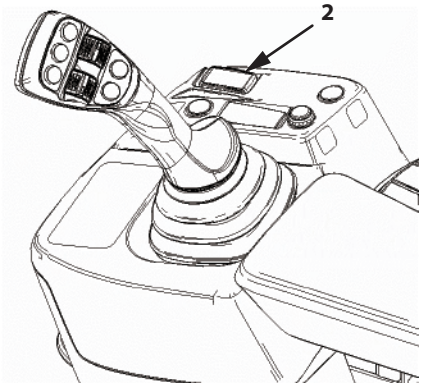

MNTL-03-003-4 ja

⚠ CAUTION

Do not idle for excessively long periods. Observe local engine idling regulations.

IMPORTANT

The DEF pump runs for a while after the engine stops to return DEF from piping to the DEF tank.
Do not turn the battery disconnect switch OFF until approximately 10 minutes after engine stops. Failure to do so may damage the urea SCR system.

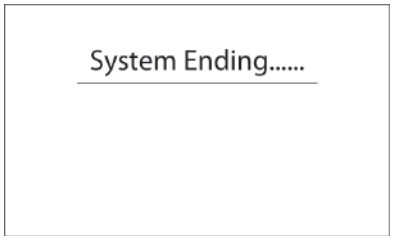

MNUD-01-144 ja

NOTE

The LED indicator besides the battery disconnect switch lights for about 10 minutes after the key switch is turned to OFF or ACC. Wait until this LED indicator goes out and then turn OFF the battery disconnect switch. The System Ending screen is displayed on the main monitor.

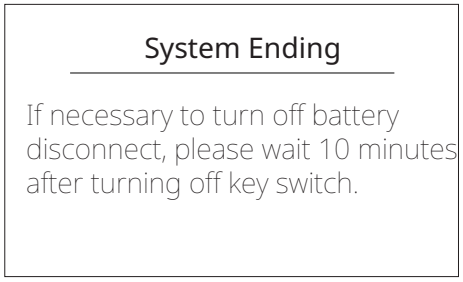

MNUD-03-001 en_GB

Driving Guidance Info

Operating the machine correctly will extend the service life of each component as well as save fuel and oil. Follow the points below and always drive in a safe and prudent manner.

1. Make sure there is nothing dangerous or any obstacles around the machine while checking for any damage to the tires and their pressure.
2. Bring the lift arm to the travel posture and fully tilt the bucket backward.
3. Before traveling on a public road, set the machine to the travel posture as illustrated to the right.
4. After starting the engine, let it idle to warm up the machine properly before starting off. Do not operate (do not depress) the accelerator pedal when starting the engine and while idling the engine. For the warm-up operation procedure, refer to section (3-15) “Warm-Up Operation”. For information on the warm-up procedure in cold weather, refer to section (3-16) “Warm-Up Operation during Cold Weather” in the chapter “Operating and Stopping the Engine”.

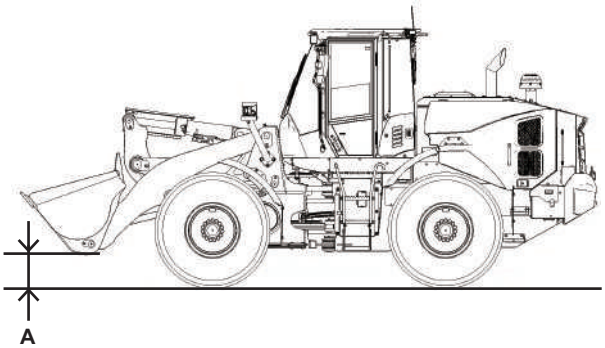

Travel Posture

MNTL-01-086-1 ja

A: 300 mm

CAUTION

When traveling on a public road, never operate the control levers to move the front attachment loading lift arm or bucket. Never touch the control lever while driving.

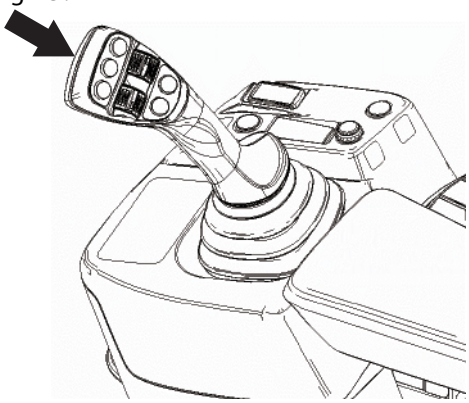

MNTL-01-085-1 ja

Shifting

Use shift switch (1) to change the speed level.
For automatic shifting, refer to section (4-13) “Starting Off”.

1st, 2nd gears : Used for digging and loading operations
3rd, 4th gears : Used for traveling

NOTE

Never attempt to abruptly shift down with shift lever (1) while traveling at high speed. When shifting, release the accelerator pedal to slow down before shifting speed

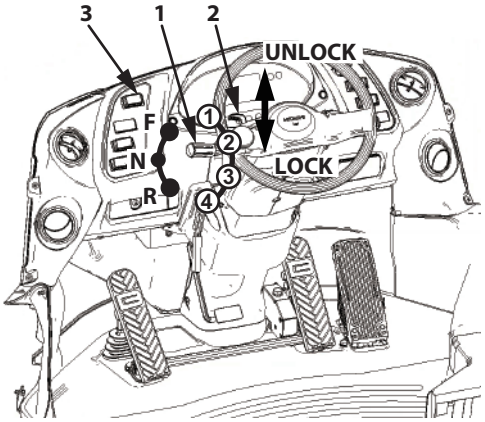

MNTL-01-087-1 en_GB

Steering

WARNING

- **Sudden turning of the steering wheel is dangerous. Do not turn the steering wheel suddenly while traveling at high speeds, or on a steep slope.**
- **Stopping the engine while traveling is dangerous. If the engine is stopped while traveling, the steering wheel will lock and the parking brake will be automatically applied. Never attempt to stop the engine while traveling.**
- **Never turn the steering wheel suddenly while raising the lift arm high as it is extremely dangerous and may cause the machine to tip over.**

IMPORTANT

When the steering wheel is fully turned, the front and the rear frames touch the stoppers to prevent the steering wheel from turning further. If the steering wheel is forcibly turned further, the engine may stall or the steering system may malfunction.

While driving, the operator will turn the steering wheel in the direction they intend to steer the machine.

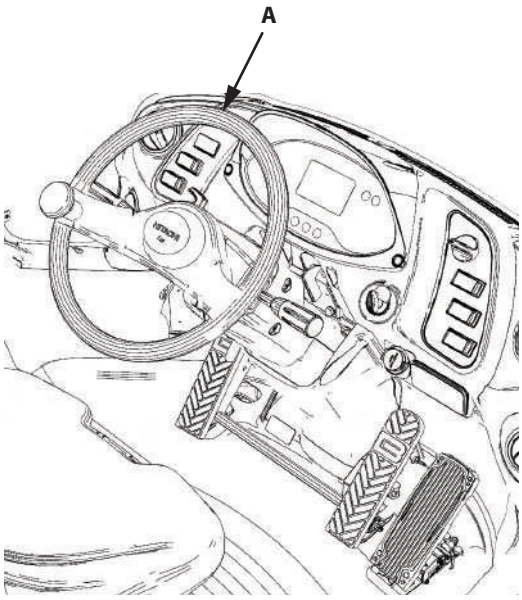

MNTL-01-043-8 ja

A: Steering wheel

NOTE

This machine has an articulated frame. The front and rear frames are coupled at the center of the machine by connection pins (center pins) so that the front and rear wheels follow the same track.
When turning the steering wheel, do so slowly as if cornering with the machine.

Direction Indicator Lever

Communicate the direction that the operator intends to turn to persons and/or other vehicles by operating direction indicator lever (1).

L- Left Turn

N- OFF

R- Right Turn

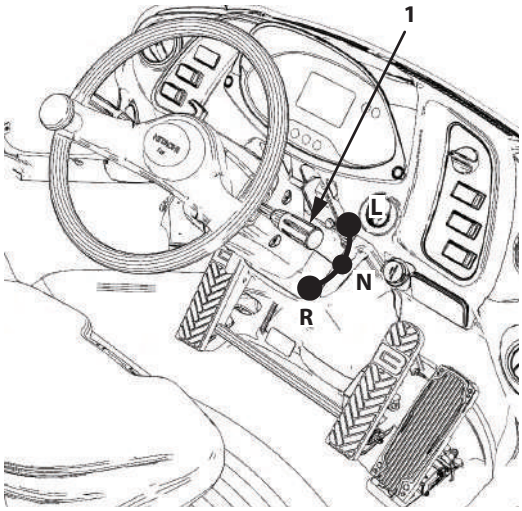

MNTL-01-043-9 ja

Shift Switch

Rotate shift switch (1) to shift the gear.

Forward	Reverse
1st - 4th	1st - 4th

Select a proper shift for the type of work.

IMPORTANT

The F-N-R lever and shift switch are designed to be extra-responsive. Do not press and twist the lever or press the switch hard. Damage to the lever and switch may result.

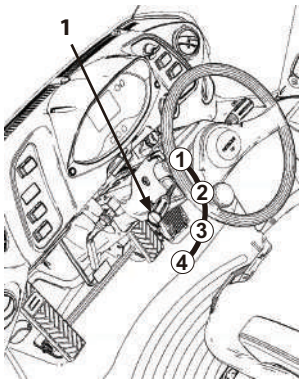

MNTL-01-044-9 ja

Forward/Reverse Selector Switch

Forward/reverse selector switch (1) activates forward/reverse switch (2) on the multi function lever.

When forward/reverse selector switch (1) is ON, forward/reverse selector switch indicator (3) lights.

The machine travels in forward or reverse by pressing (F) or (R) button of forward/reverse switch (2).

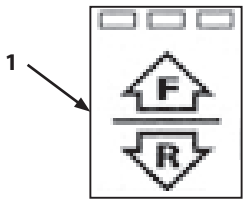

MNUD-01-209-1 ja

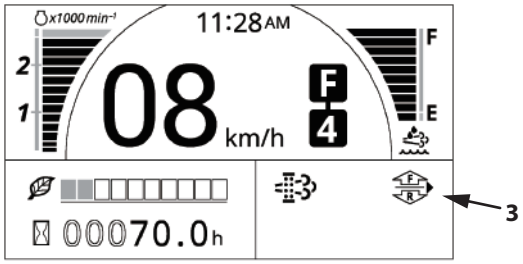

MNTL-MT-001-11 ja

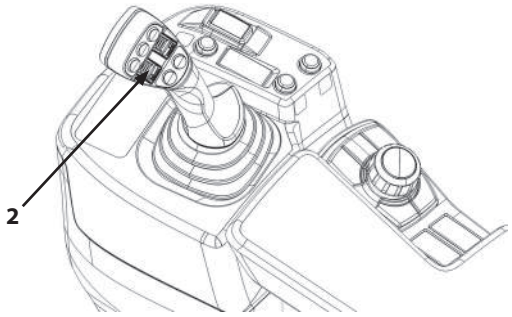

MNUD-01-099-1 ja

Switch Operation

1. Turn OFF parking brake switch (4).

WARNING

At this time, depress the brake pedal as a safety precaution.

2. When forward/reverse selector switch (1) is turned ON while both F-N-R lever (5) and forward/reverse switch (2) are in the neutral (N) position, forward/reverse selector switch indicator (3) is lit.
3. Set forward/reverse switch (2) to (F) or (R).

NOTE

When F-N-R lever (5) is set to a position other than the neutral (N) while forward/reverse switch (2) is operating, forward/reverse switch (2) becomes disabled. (F-N-R lever priority control)
If forward/reverse switch (2) is used again, perform step 2.

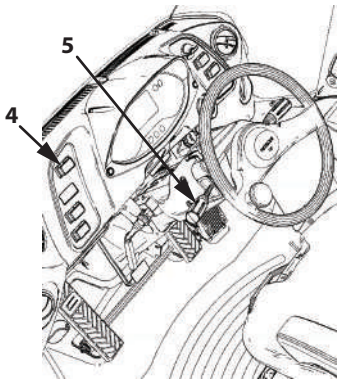

MNTL-01-044-12 ja

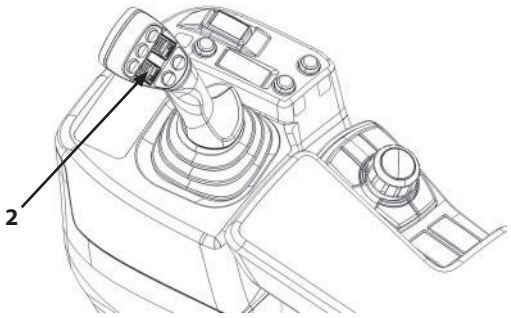

MNUD-01-099-1 ja

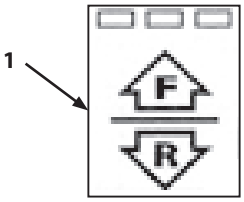

MNUD-01-209-1 ja

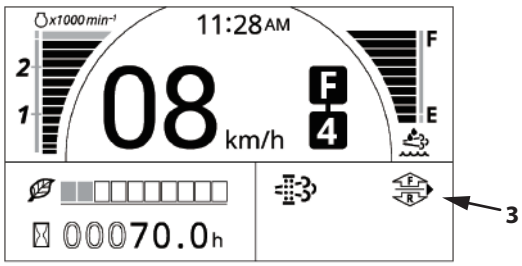

MNTL-MT-001-11 ja

Accelerator Pedal

When accelerator pedal (1) is stepped on, the engine speed increases. When released, the engine speed decreases.

NOTE

The engine speed may change by mechanical means regardless of accelerator pedal operation.

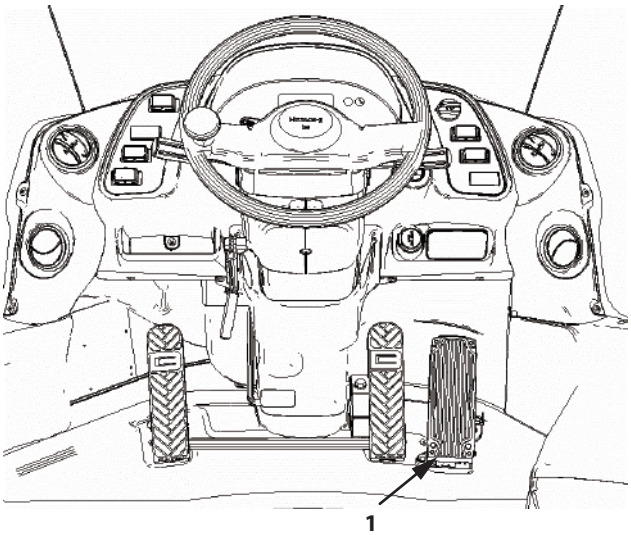

MNTL-01-063-3 ja

Brake Pedal

WARNING

- **Avoid sudden braking while traveling as it is dangerous. It may imbalance the machine.**
- **To prevent wear on the brake pads, brake discs and clutch, and to keep the axle oil from overheating, keep your feet off the brake pedal except when is not needed.**
- **Make sure debris and sand do not accumulate around the brake pedal mount. If debris or sand has accumulated around the brake pedal mount, clean it out before operating the machine. Failure to do so may inhibit use of the brakes.**

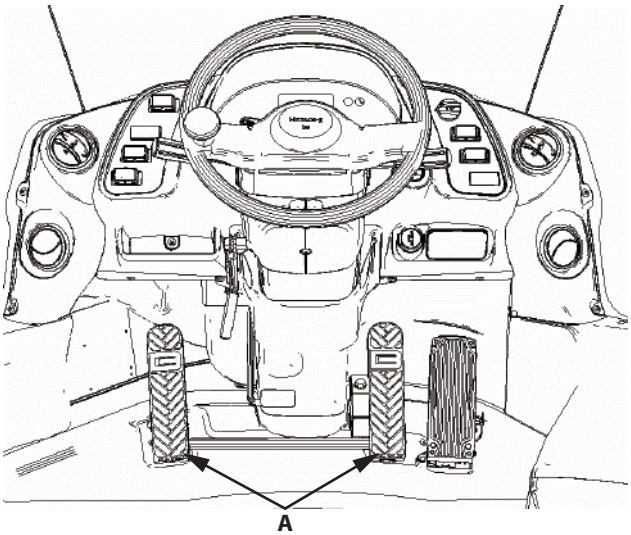

MNTL-01-063-4 ja

A: Brake Pedal

Tilt, Telescopic Lever/ Steering Column Pop-up Pedal

WARNING

- **Before operating the machine, check that the steering wheel is locked.**
- **Do not operate tilt, telescopic lever (1) and steering column pop-up pedal (2) while operating the machine as it is dangerous.**

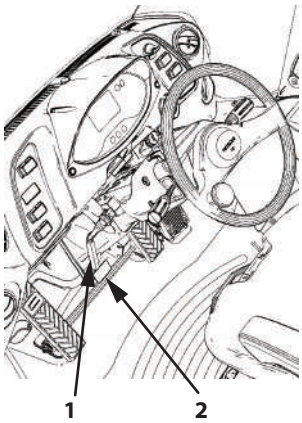

MNTL-01-044-10 ja

- Before operating the machine, adjust the steering column height and inclination for optimal operator ergonomics.
  When adjusting, pull lever (1) to set the steering column to the desired inclination and height. Push lever (1) until it contacts the stopper, ensuring the steering column is locked.
- By depressing steering column pop-up pedal (2), the steering column moves forward, increasing the distance between the operator's seat and the steering wheel which allows the operator to get in and out of the machine easily.
- After moving the steering column forward, pull the steering wheel toward the operator’s seat. The steering column will be automatically locked and the machine becomes operable.

CAUTION

Do not drive the machine while moving the steering column to the up position.

Parking Brake Switch

WARNING

- **Always engage the parking brake when parking or leaving the machine to prevent accidents caused by the machine running away.**
- **Do not engage the brake with parking brake switch (1) while driving, except in an emergency. It causes premature wear and/or damage to the parking brake. When the parking brake has been engaged in an emergency while driving, contact Authorized Dealer to inspect the parking brake.**

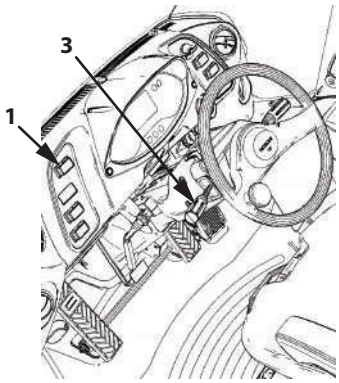

MNTL-01-044-13 ja

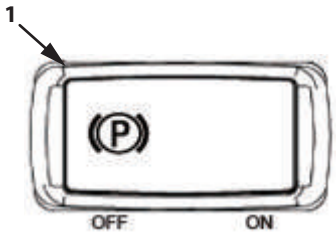

MNUD-01-146-1 ja

1. Press the OFF side of parking brake switch (1) to release the parking brake. Check that parking brake indicator (2) turns OFF by pressing the switch twice and it gives off a "click, click".
   Press the ON side of parking brake switch (1) to apply the parking brake.
   Apply the parking brake after parking the machine on level ground.

   NOTE

   While running the engine, when the parking brake is applied with F-N-R lever (3) in neutral, parking brake indicator (2) comes ON.

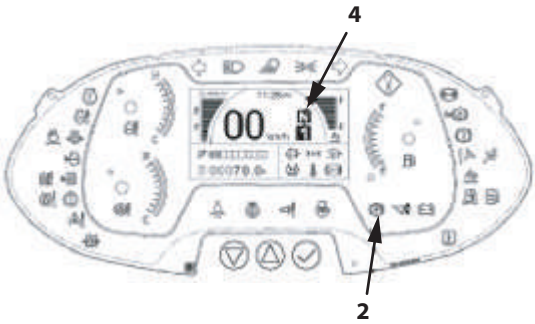

MNUD-01-141-1 ja

2. While running the engine, when the parking brake is applied with F-N-R lever (3) in either the forward (F) or reverse (R) position, parking brake indicator (2) comes ON, and the alarm sounds. FNR display (4) of the monitor display indicates (N), not (F) and (R). Release the parking brake and momentarily return the F-N-R lever to the neutral position. Then, change to the forward or reverse position. ("F" or "R" is properly indicated.)
3. As a safety precaution, when the engine is stopped, the parking brake is applied even if parking brake switch (1) is in the OFF position.
   In this case, the parking brake will not be released even after the engine is restarted. After starting the engine, push the ON side of parking brake switch (1) once, then push the OFF side to release the parking brake.

Power Mode ON/OFF

Power mode switch (1) setting may affect the gear shift timing in auto shift mode. Pressing power mode switch (1) of panel switch (2) alternates the power mode ON and OFF.

OFF : Auto shifting mode quickens the timing of the shift-up.

ON : Auto shifting mode delivers standard timing of the shift-up.

NOTE

For details on power mode switch operation, refer to section (1-133) "Power Mode ON/OFF".

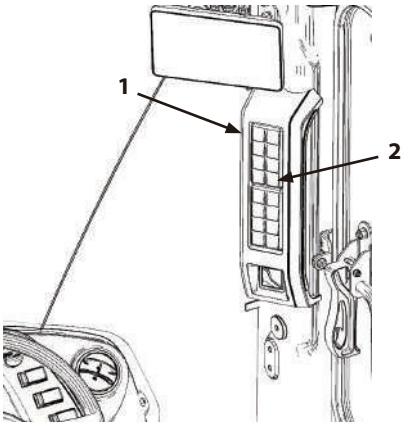

MNTL-01-039-9 ja

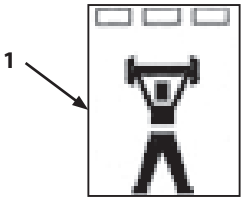

MNUD-01-212-2 ja

	Pilot Lamp	
	■ ■ ■	■ □ ■
Function	OFF	ON

□: LED ON

■: LED OFF

Ride Control ON/OFF

WARNING

- **Never turn ride control switch (3) ON when traveling in the machine or when raising the bucket. Failure to do so may automatically move the lift arm up or down.**
- **Before turning the ride control switch (3) ON, stop the vehicle and do a safety check around the bucket.**

Before starting to move, turn the ride control function OFF by ride control switch (3) on panel switch (2). Pressing ride control switch (3) alternates the ride control ON and OFF.

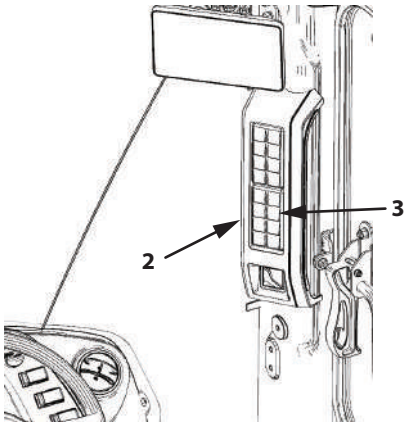

MNTL-01-039-10 ja

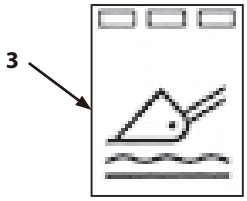

MNUD-01-214-4 ja

	Pilot Lamp	
	■ ■ ■	■ □ ■
Function	OFF	AUTO

□: LED ON

■: LED OFF

Starting Off

WARNING

- **Check that no personnel and/or obstacles are present around the machine, and sound the horn before moving the machine.**
- **Never turn ride control switch (5) ON when traveling in the machine or when raising the bucket. Failure to do so may automatically move the lift arm up or down.**
- **Before turning ride control switch (5) to ON, stop the vehicle and do a safety check around the bucket.**

NOTE

For information about the how to operate the ride control switch (5), refer to section (1-136) "Ride Control Switch".

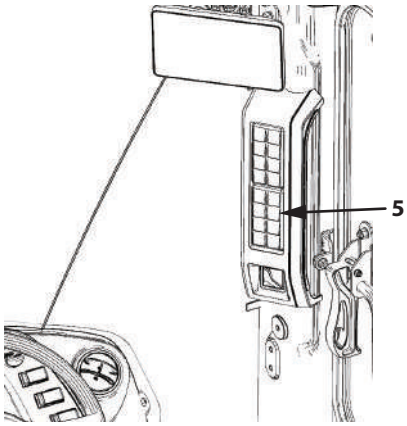

MNTL-01-039-7 ja

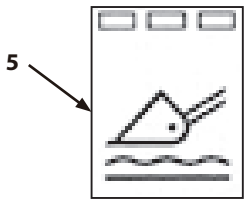

MNUD-01-214-5 ja

1. Check the monitor panel and make sure no warning lights other than the parking brake light (1) are lit.

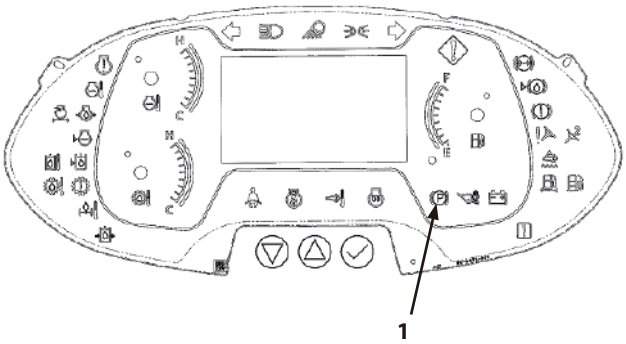

MNUD-01-030-14 ja

2. Set the front attachment in the travel posture by operating control lever (2).

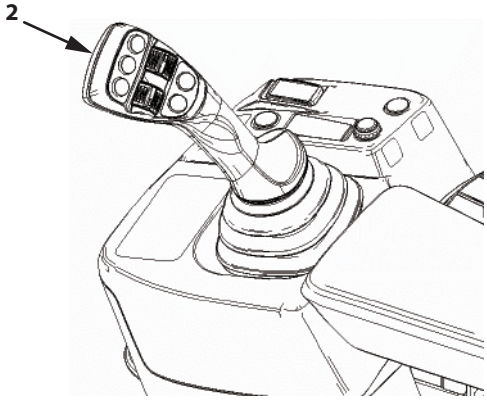

MNTL-01-085-2 ja

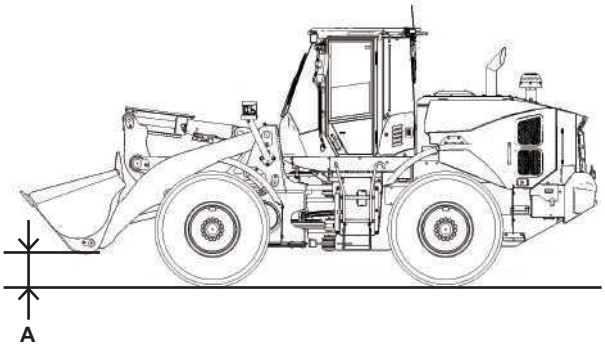

Travel Posture

MNTL-01-086-1 ja

A: 300 mm

3. Set neutral lever lock (4) to the UNLOCK "🔓" position.

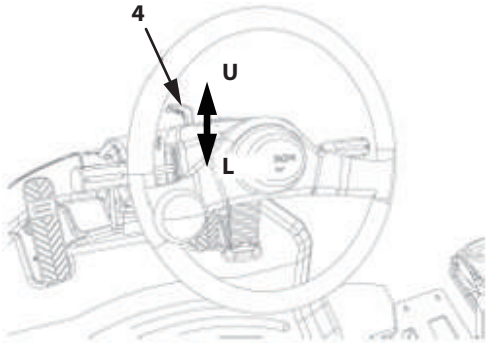

MNUD-04-003-2 ja

U: UNLOCK

L: LOCK

4. Step on brake pedal (6) or (7) and press parking brake switch (8) to the OFF position to release the parking brake.
   At this time, check that the parking brake indicator (1) goes OFF.
5. Release brake pedal (6) or (7) and step on accelerator pedal (10) to start traveling.

CAUTION

When traveling on a public road, never operate the control levers to move the front attachment loading lift arm or bucket. Never touch the control lever while driving.

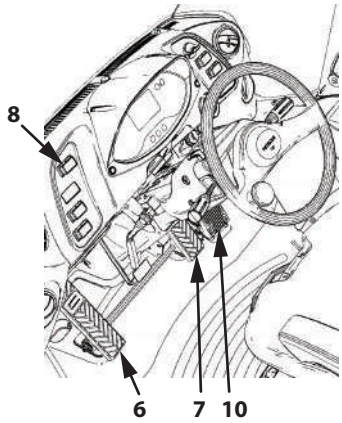

MNTL-01-044-11 ja

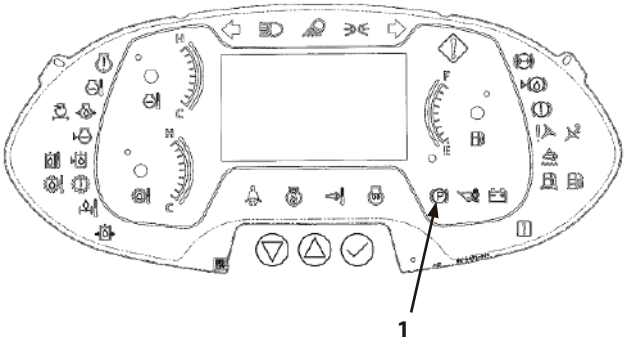

MNUD-01-030-14 ja

Selecting Forward/Reverse

WARNING

- **Before selecting either forward or reverse, confirm that the direction to be taken is clear.**
- **To ensure the operator's safety and ensure the longevity of the power train system, choose a direction of travel only after reducing speed.**
- **Be sure to select the direction of travel only when the machine travel speed is 13 km/h or slower, if it is in the 3rd or 4th gear.**

1. Pull neutral lever lock (2) to the UNLOCK position.
2. Place parking brake switch (1) in the OFF position.
3. Move F-N-R lever (3) to the desired position.
   When forward/reverse switch (4) is enabled, select the desired position.

F : Forward
N : Neutral
R : Reverse

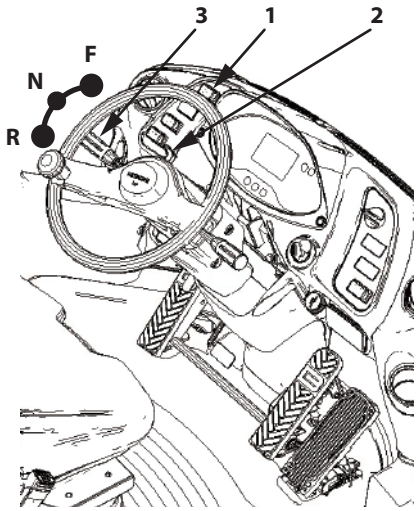

MNTL-03-002-5 ja

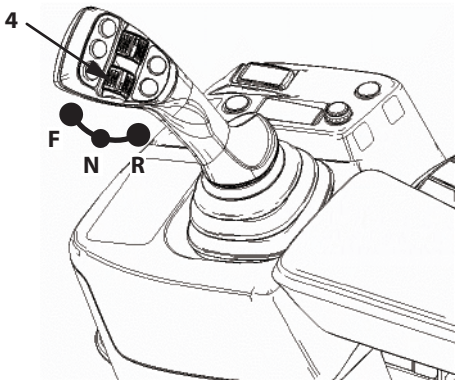

MNTL-01-085-3 ja

Emergency Steering (Machine Equipped with Emergency Steering)

If the oil pressure in the steering system is abnormal, the emergency steering system is activated so that steering functionality can be achieved. If the emergency steering system is activated, the emergency steering indicator lights and the buzzer sounds. Turning the steering wheel will become difficult, but steering will be operable. Immediately park the machine in a safe location and contact Authorized Dealer.
Emergency steering can be used for only 60 seconds.

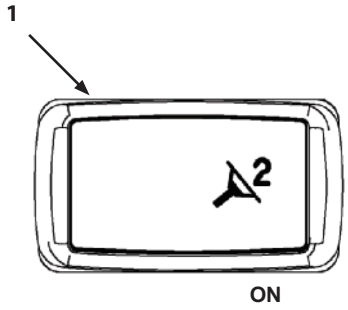

MNUD-01-058-1 ja

IMPORTANT

Emergency steering is designed for temporary use. If utilized continuously for 60 seconds or more, damage to the system may result.

Even though the machine is equipped with the emergency steering system, if the steering function fails while traveling, press emergency steering check switch (1) on the right console of the operator's seat to activate the emergency steering system. Then, immediately park the machine in a safe location.
When emergency steering is activated by pushing emergency steering check switch (1) to the ON position, it can be used continuously for only 30 seconds.

NOTE

- *When the engine is started, the system activation sound (electric motor sound) emits for about 2 seconds to automatically check the emergency steering system.*
- *Before operating the machine, press emergency steering check switch (1) to confirm that the emergency steering pump functions normally.*

Stopping the Machine

1. Avoid sudden deceleration. Bring the machine to a stop smoothly.
   Release accelerator pedal (1) and step on brake pedal (2) to stop the machine.
2. Return F-N-R lever (3) to the neutral (N) position.
   Place neutral lever lock (4) in the LOCK position.
3. Place parking brake switch (5) in the ON position.

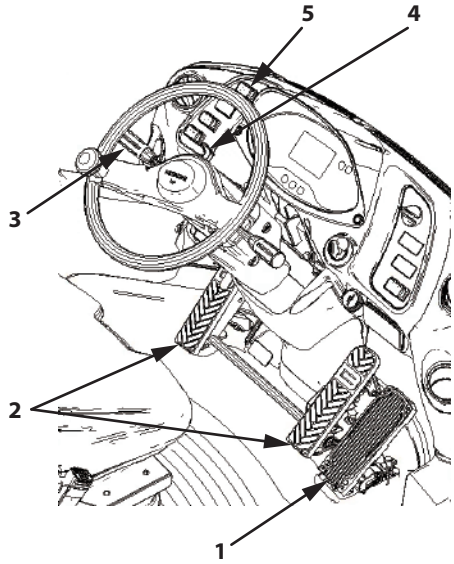

MNTL-03-002-6 ja

4. Level the bucket with the surface of the ground by operating control lever (6).
5. Press LOCK "🔒" side of control lever pilot shut-off switch (8).

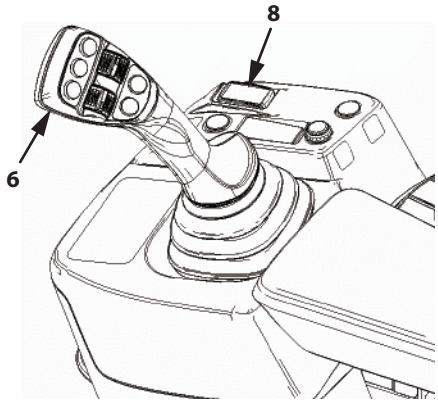

MNTL-01-085-4 ja

IMPORTANT

This machine has an engine equipped with a turbocharger. If it is stopped without first performing the cool down operation, the lubricant on the turbocharger bearing surfaces may dry out due to the intense heat inside the turbocharger, possibly causing damage to the turbocharger.

6. Run the engine at slow idle speed (engine cool down operation) for 5 minutes.

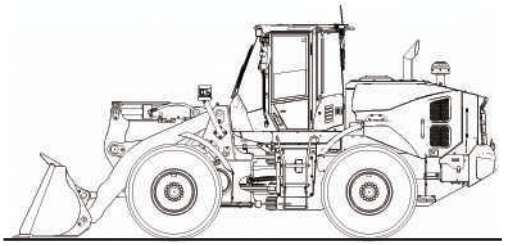

Stopped Posture

MNTL-01-088-1 ja

IMPORTANT

Leaving key switch (9) in the ACC position may deplete the batteries. Be sure to turn key switch to the OFF position before leaving the machine.

7. Turn key switch (9) to the OFF position to stop the engine. Then, remove the key. Place neutral lever lock (4) in the LOCK position.
8. Before leaving the machine, close and lock all windows, cab doors and covers.

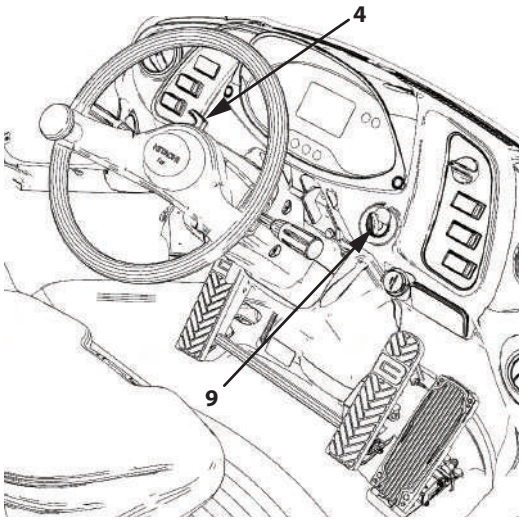

MNTL-01-043-12 ja

MNTL-01-094-2 ja

Temporary Stopping and Restart of Driving

Follow the tips described below when in a situation where the machine has to be temporarily stopped and moved slightly.

1. Gently release the accelerator pedal. Step on the brake pedal to stop the machine.
2. Slowly depress the accelerator pedal to move the machine again.
3. In case the machine needs to be parked for a long period, make it a rule to return the F-N-R lever to neutral (N), turn the parking brake switch to the ON position, and apply the parking brake as a safety precaution.
4. While traveling, the travel posture may slump slightly due to internal hydraulic oil leaks. When the travel posture needs to be corrected, bring the machine to a halt temporarily. Then, return the F-N-R lever to neutral (N), apply the parking brake by turning the parking brake switch to the ON position, and correct the positions of the lift arm and bucket. Make it a rule to always drive the machine in the correct travel posture.

Parking

IMPORTANT

If the machine is parked with cab windows or the door open, electrical components may be damaged if rain is blown inside the cab. Close all windows and the doors when parking the machine.

1. Park the machine on a firm, level surface. Lower the bucket so it sits level on the ground.

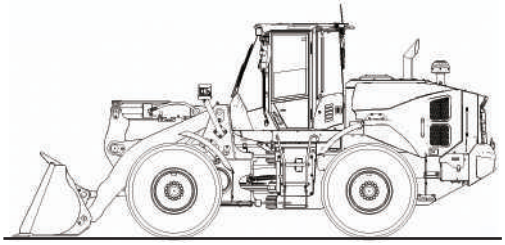

Stop and Parking Position

MNTL-01-088-1 ja

2. Place parking brake switch (1) to ON.

IMPORTANT

This machine has an engine equipped with a turbocharger. If it is stopped without first performing the cool down operation, the lubricant on the turbocharger bearing surfaces may dry out due to the intense heat inside the turbocharger, possibly damaging the turbocharger.

3. Run on low idle for approximately 5 minutes to cool the engine.
4. Turn key switch (2) to the OFF position to stop the engine. Remove the key.

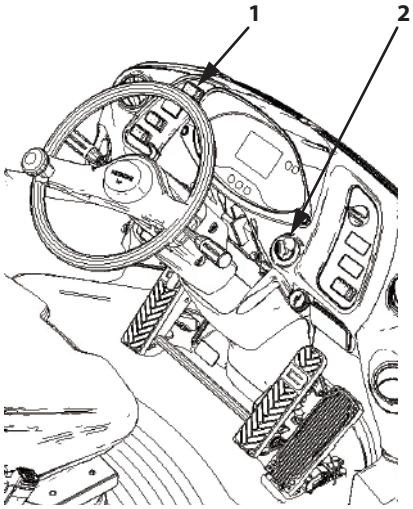

MNTL-03-002-7 ja

5. Press LOCK "🔒" side of control lever pilot shut-off switch (3).
6. Before leaving the machine, close and lock all windows, cab doors and covers.

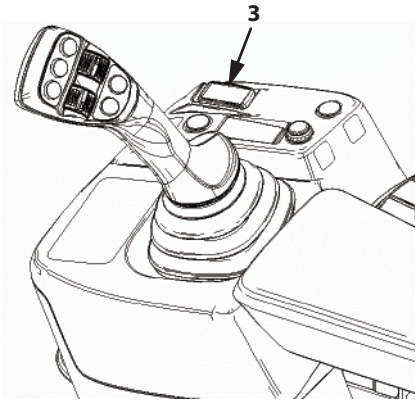

MNTL-01-085-5 ja

Emergency Situations

When the Engine Stalls while Traveling

Pressurized oil in the accumulator acts on the brake when the brake pedal is depressed. Quickly and calmly stop the machine in a safe location. Do not pump (piston brake) the brake pedal in this instance.
Pumping the brake reduces the brake oil pressure quickly which disables the brakes.

If the machine does not stop even if the brake pedal is stepped on, press the parking brake switch ON side to stop the machine.

The steering wheel will become difficult to turn as the hydraulic system becomes inoperable.

If any symptom mentioned above occurs, immediately trace the cause of the problem.
If a complex failure has occurred, consult Authorized Dealer.

Precautions for Traveling

Observe basic driving manners in addition to the following precautions and drive in a safe and proper fashion.

WARNING

- **Should a tire get punctured while driving, hold the steering wheel tight and slowly bring the machine to a stop.**
  Slamming on the brake pedal or applying the brakes suddenly might cause loss of steering control and possibly cause a serious accident.
- **Never climb aboard or climb off a moving machine. Never allow anyone other than the operator to ride on the machine when it is traveling.**

- Even after breaking-in is complete, avoid “Idling” the engine.
- If any abnormal condition such as an abnormal noise or smell is noticed while traveling, immediately stop the engine and inspect the machine for any trouble.
- Avoid sudden steering or braking as much as possible as these actions pose a danger to not only this machine but also to other vehicles.
- Driving speeds of this machine are lower than most normal automobiles. Give the right of way to automobiles whenever possible.
- Make a habit of periodically glancing at the gauges. If any abnormalities are found, immediately stop the machine and check for the cause of the trouble.
- When traveling on a shoulder or narrow area, use a signaller.
- When starting off, or turning left or right at an intersection, pay particular attention to front and side visibility. Check that its safe to go and drive slowly.

Traveling in Water or on Muddy Terrain

IMPORTANT

Should the axles, transmission, parking brake become submerged in water or sand, continuing to use them in this state may cause abnormal wear to the inner gears, or the machine may become damaged. Inspection and servicing is required. Immediately consult Authorized Dealer.

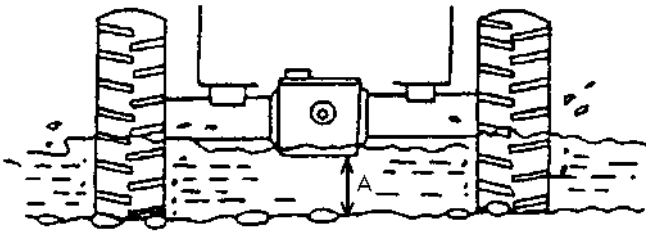

M4GB-04-003 ja

- Do not use with the front and rear axles, transmission, parking brake or front and rear propeller shafts submerged in water or mud. Avoid driving in water as much as possible.
- Should the machine be driven in water or muddy terrain, do not let it get immersed in water or mud deeper than the allowable depth (A) (up to the bottom of the axle housing). Operate in slightly shallower water if the river bed is rugged or the river current is strong.
- When driving/operating in mud, sediment can easily build up inside the frame even if the frame is not heavily immersed in mud.

NOTE

After finishing the task, clean the vehicle and lubricate the parts that were immersed in water.

Precautions for Traveling on Slopes

WARNING

- **Do not coast down a slope with the F-N-R lever placed in neutral (N). Failure to do so will not only make the engine brake ineffective, but also cause various mechanical problems.**
- **When going down a slope use the engine brake. Apply the brakes only when required. If just the brake pedal (regular brake) is used while going down a slope, the brakes will heat up, possibly decreasing the braking performance.**
  If the braking system does overheat, immediately stop the machine in a safe location. Restart and drive the machine after the braking system cools.
- **When going down a slope do not drive the machine faster than its maximum travel speed. Failure to do so may damage the machine and/or cause a serious accident.**

When steering on a slope, lower the bucket for better machine stability. Do not turn the steering wheel on a steep slope, as there is a greater chance of turning the machine over.

When going down a slope in the machine, select a low gear with the shift switch and drive using an ample amount of engine braking.

Do not drive the machine faster than its maximum travel speed.

If the engine stalls on sloped terrain, immediately step on the brake pedal as strongly as possible, and lower the bucket to the ground to stop the machine. The parking brake is applied when the engine is stopped regardless of the position of the parking brake switch. Before restarting the engine, return the F-N-R lever to neutral (N) and turn the parking brake switch ON.

- Before going down a slope, apply the brakes to check that they work normally.
- If the hydraulic oil and lubricants are not warmed up, the machine may not achieve its full hill grade ability. Warm up the machine fully before climbing a steep slope.

Precautions to be Taken if Machine Failure Occurs

- Do not panic. While paying attention to the vehicles behind the machine, gradually slow the machine speed and stop it on a road shoulder. Then, set the parking brake switch to the ON position to engage the parking brake. When a machine failure is discovered while in a short tunnel, stop the machine after leaving the tunnel unless there is particular obstacle to doing so.
- Mark the vehicle as being broken down. Failing to mark the vehicle may result in being hit by a trailing vehicle. Use one of the following methods to indicate the vehicle is broken down.
  - Roadside assistance signs
  - Turn hazard lights ON
  - Emergency signaling equipment (emergency signal lights)
  - Red flag and/or red light
  - Tie a handkerchief somewhere that can be easily seen like a door or at the rear of the machine.
- Check the failed part. If the machine can be repaired without outside assistance, do it so in a safe manner in consideration of surrounding vehicle traffic conditions.

WARNING

If oil is spilled on the road surface, it may cause trailing vehicles to slide, creating a serious accident.

- If hydraulic oil is leaking, fix the problem immediately. Should the road get covered with a large amount of oil, take immediate steps to inform trailing vehicles of the hazard and remove the leaked oil.
- Consult Authorized Dealer for any repairs you cannot make yourself.
- Repair work in a tunnel is extremely dangerous. Refrain from working outside the vehicle even for simple tasks.

Front Attachment Control Lever

Operates the lift arm and bucket.

Lever position	Lift arm/bucket operation
C	Float: The lift arm free falls, and if the bucket touches the ground, it can be moved up and down as external forces are applied.
B	Lift Arm Lower
N	Neutral: The lift arm is stopped and held in that position.
A	Lift Arm Raise
F	Detent: The lift arm is held in the up position.
G	Tilt Dent: The bucket is held in the bucket tilt position.
D	Bucket Tilt: The bucket is tilted back, taking the travel/ transport posture.
E	Bucket Dump: The bucket is tilted forward to dump the load material.
H	Dump Detent: The bucket is held in the dump position.

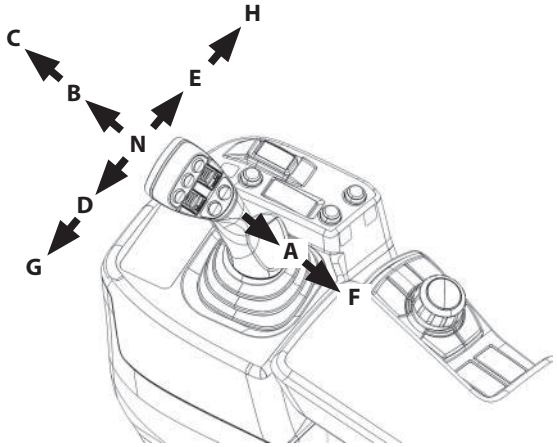

MNUD-01-099-2 ja

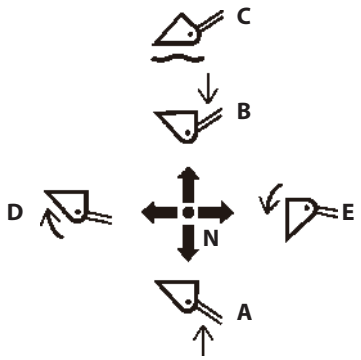

M4GB-01-074-1 ja

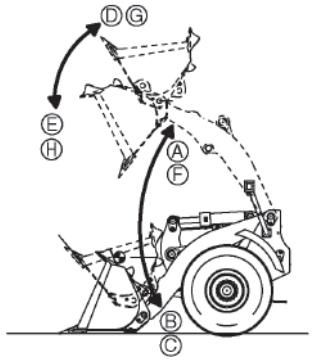

MNUD-05-005 ja

IMPORTANT

The control lever checking function, which shuts off the pilot pressure, may make the control levers lose functionality under some conditions. Return the lever to the neutral position (N) and operate it again.

NOTE

Placing the multifunction joystick lever in the "Float" (C) or the "Detent" (F), (G), (H) position makes lever operation slightly stiff. Upon releasing the lever, it automatically moves to the NEUTRAL (N) position, but the lift arm or bucket continues to move until it reaches the specified position.

Control Lever Lock

WARNING

- **To lock, be sure to press the lock "🔒" side of control lever pilot shut-off switch (1).**
- **Before exiting the operator's station, shut down the engine. Press the lock "🔒" side of control lever pilot shut-off switch (1).**
- **Before transporting or exiting the machine at the end of a shift, put in the control level pilot shut-off switch in the lock "🔒" position.**

Control lever pilot shut-off switch (1) functions to prevent misoperation of the wheel loader if the front attachment control levers are accidentally moved when the operator exits and enters the machine. When the control Lever pilot shut-off switch is placed in the unlock "🔓" position, the front attachment control lever becomes operable.

NOTE

When control lever pilot shut-off switch (1) is in lock position (A), the ride control function is disabled.

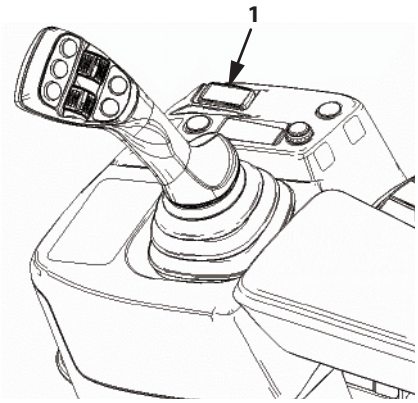

MNTL-01-085-6 ja

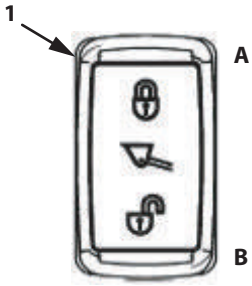

MNTL-05-001-1 ja

A: LOCK

B: UNLOCK

Control Lever Lock Operation

When exiting the operator's station

1. Park the machine on a firm, level surface. Lower the bucket to the ground. Return all levers to the NEUTRAL position and shut down the engine.
2. Press the lock "🔒" side of control lever pilot shut-off switch (1) to place it in the lock position. Verify that control lever lock indicator (2) on the monitor panel is lit.
   - Before starting operation
     Before starting operation, check that control lever pilot shut-off switch (1) is on the unlock "🔓" side and in the unlock position.

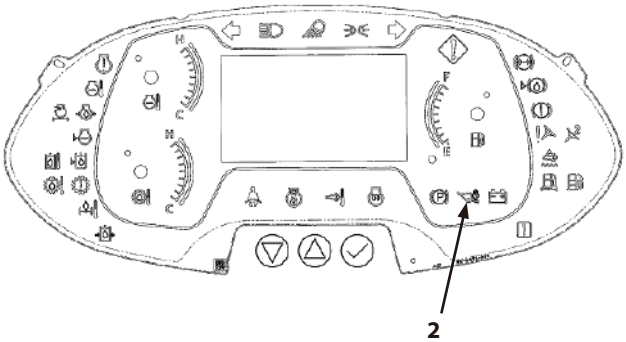

MNUD-01-030-15 ja

Approach Speed Control Switch

The mode judges dump truck loading by detecting the lift arm position of the wheel loader while it travels forward at a specified speed or higher. Then, the travel speed is reduced automatically by decreasing the engine speed.

The operator can select a favorite approach speed in response to the travel distance and operating conditions for better fuel efficiency and operability.

Pressing approach speed control switch (1) changes the travel speed mode in the sequence:
"Fast"→"Middle"→"Slow"→"OFF"→"Fast".

NOTE

When the setting is "OFF", the travel distance will be further than usual and the machine will approach a dump truck at a speed around 12 km/h. When the setting is "Slow", the speed is reduced to 6 to 7 km/h even if the accelerator pedal is fully depressed.

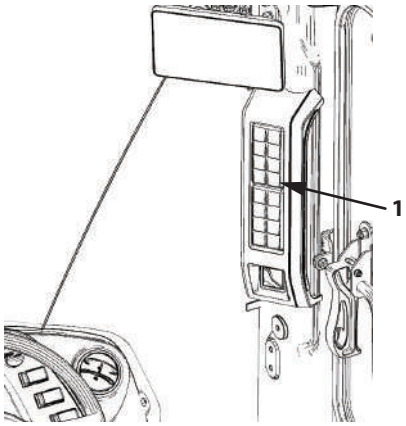

MNTL-01-039-8 ja

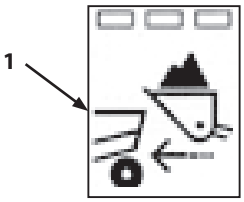

MNUD-01-210-1 ja

	Pilot Lamp			
	□ ■ ■	□ □ ■	□ □ □	■ ■ ■
Function	Fast	Middle	Slow	OFF

□: LED ON ■: LED OFF

Adjusting the Dual Lift Arm Auto Leveler

WARNING

- **Exercise extreme caution when adjusting the lift arm auto leveler to prevent serious injury.**
- **Apply the parking brake to prevent the machine from moving unexpectedly and wedge blocks against the tires. Keep non-essential personnel away from the machine.**

IMPORTANT

- **When the lift arm auto leveler function is activated with the bucket loaded, the bucket may be stopped at a position lower than the preset position.**
- **Downward height setting cannot be performed when the lift arm is higher than horizontal. Moreover, upward height setting cannot be performed when the lift arm is lower than horizontal.**

The lift arm auto leveler system automatically stops the lift arm at a preset height when lowering or raising the lift arm. When the machine is engaged in repetitive loading/unloading work, adjust the lift arm stop position so that the machine can be more efficiently operated.

To adjust the stop position, refer to section (1-87) “Lift Arm Height Kick Out ON/OFF, Stop Position Height Setting" and section (1-89) “Lift Arm Lower Kick Out ON/OFF, Stop Position Height Setting”.

Auto Shut-Down (Optional)

WARNING

This function automatically shuts down the engine. Pay close attention to the task and work environment when using this function.

When the auto shut-down function is ON (enabled), the engine automatically shuts down after a certain amount of time if the auto shut-down operating conditions are met, such as the parking brake switch is ON, and the forward/reverse lever or switches are all in the neutral position. Refer to the descriptions on the next page for the exact operating conditions.

30 seconds before the engine stops, sub monitor (1) displays a message "Engine Shut-Down Soon." and a buzzer sounds. The buzzer sounds 1 time at 30 seconds before, sounds 1 time at 15 seconds before, and at 5 seconds before, then stops after 15 seconds.

Auto shut-down will be disabled and the engine will not stop if any of the following conditions are met:

- Parking brake is OFF
- The forward/reverse lever (switch) is set in the forward (F) or reverse (R) position
- The brake pedal is depressed
- The accelerator pedal is depressed

IMPORTANT

Check the ON/OFF state of auto shut-down. If the middle LED of the auto shut-down switch (2) is lit, auto shut-down is enabled (ON).

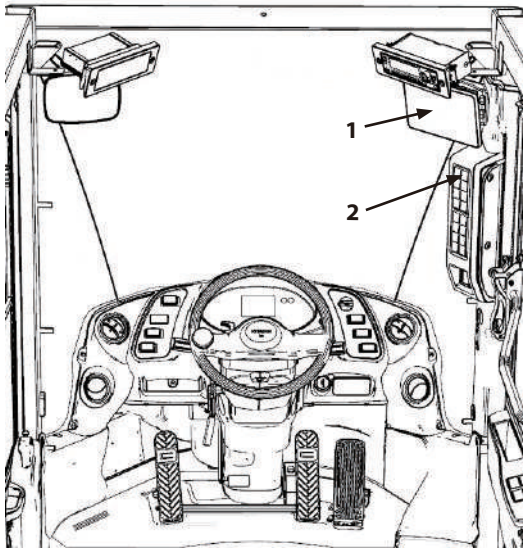

MNTL-01-041-7 ja

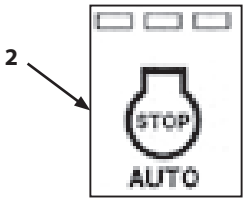

MNUD-01-204-2 ja

	Pilot Lamp			
	■ ■ ■	■ □ ■		
Function	OFF	ON		

□: LED ON ■: LED OFF

Auto Shut-Down Operating Conditions

- Engine operating
- Parking brake is ON
- Forward/reverse lever (Switch) is in the neutral (N) position
- Accelerator pedal not operated
- Brake pedal not operated
- Control lever not operated
- Steering wheel not operated
- Coolant, hydraulic oil, transmission oil not hot
- Aftertreatment device not being manually regenerated

IMPORTANT

- **When the engine is stopped by the auto shut-down function, turn the key switch to ACC or OFF once, then turn it to the START position to restart the engine. Do not leave the machine while the auto shut-down function is enabled as it may consume the batteries.**
- **When the key switch is turned to the OFF position while the auto shut-down function is ON, the auto shut-down setting will be reset. When keeping the setting is necessary, consult Authorized Dealer.**

For details on the auto shut-down settings, refer to section (1-125) "Auto Shut-Down ON/OFF".

Aftertreatment Device Manual Regeneration

Manual Regeneration Procedure

When the manual regeneration is needed, (yellow) icon (1) and inspection/maintenance indicator, shown in the illustration on the right, will be displayed on the screen. When (yellow) icon (1) is displayed, manual regeneration must be performed.

Before starting manual regeneration, be sure to check the following.

- No one around the machine
- No flammable materials near the muffler filter
- Fuel level alarm is not lit
- DEF level alarm is not lit

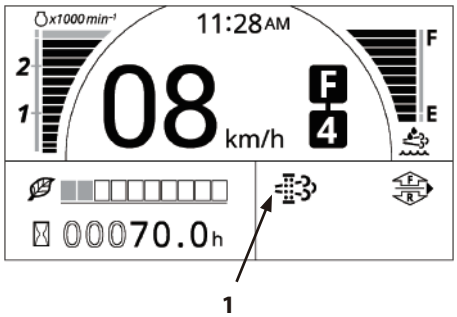

Basic Screen

MNTL-MT-001-2 ja

1. Park the machine in a safe and well-ventilated area, and lower the front attachment to the ground.
2. Set the accelerator pedal, and work levers and switches in the following states. Manual Regeneration Request screen (2) will be displayed.

Accelerator Pedal	: OFF
F-N-R Lever	: N (Neutral)
Parking Brake Switch	: ON
Control Lever Pilot Shut-off Switch	: LOCK ( ) position
Regeneration Inhibition Switch	: OFF

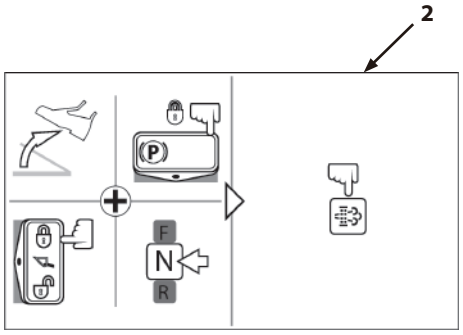

Manual Regeneration Request Screen

MNUD-01-033-2 ja

3. Push aftertreatment device regeneration switch (4) on panel switch (3).

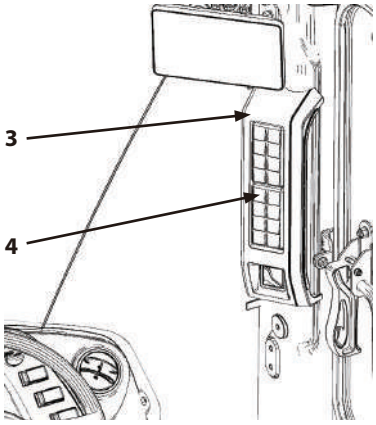

MNTL-01-039-1 ja

MNUD-01-202-1 ja

4. When pushing aftertreatment device manual regeneration switch, screen (5) as shown in the right will be displayed. Pushing the aftertreatment device regeneration switch again displays screen (6) and the manual regeneration starts. Bar graph (7) on the screen shows the progress of the regeneration process.

5. When the regeneration process is finished, "Regeneration Has Completed." message will be displayed.
   If "Regeneration Has Failed." is displayed, start the regeneration process again. The regeneration process may fail if, for instance, there is a malfunction of a sensor that is important for regeneration at low air temperatures.

   NOTE

   For details on the manual regeneration procedure, refer to section (1-7) "Aftertreatment Device Manual Regeneration Procedure".

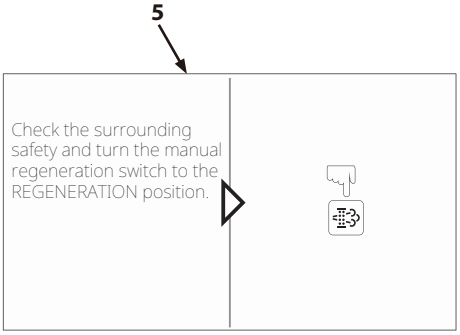

MNUD-01-034-1 en_GB

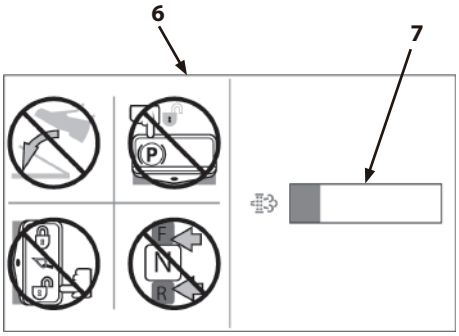

MNUD-01-032-1 ja

Before Operation

WARNING

- **Install only authorized buckets and other attachments on the working device.**
- **Never modify or increase the capacity of the bucket or other work tools without first receiving authorization. Do not overload the body of the machine by installing additional weights to it. Failure to do so may result in injury and/or machine trouble.**

Ensure Safety when Operating on Road Shoulders

CAUTION

Make sure the ground is strong enough before working on the shoulder of a road.

Avoid Reckless Digging Practices

WARNING

- **To prevent accidents, do not dig the bucket into (piles of soil and/or gravel) at high speed.**
- **Avoid digging or scooping loads when the machine is articulated as it may cause the machine to turn over.**

IMPORTANT

Do not load on only one side of the bucket or attachment. Failure to do so may damage the machine or cause other kinds of trouble.

Avoid Sudden Steering Changes and/or Sudden Braking

WARNING

Always keep the worksite grounds level. Avoid abrupt steering changes and sudden braking while the lift arm is raised with a full bucket to prevent the machine from turning over.

Avoid Operating with Unbalanced Loads

WARNING

Do not operate the machine in a reckless manner by loading material on only one side of the bucket. It could cause the machine to turn over or deform the lift arm and other working devices.

Avoid Frequent Bucket Shaking

IMPORTANT

Do not dump and tilt the bucket repeatedly with high speed and high frequent. It may damage the front linkage and hydraulic components.

Excavation

Digging and Loading Accumulated Soil

IMPORTANT

Avoid operating the wheel loader with the front tires off the ground as it not only reduces traction, it places an excessive load on the suspension.

Scoop load while driving the wheel loader forward as described below. If the tires begin to slip as the weight of the load increases, slightly raise the lift arm to lighten the load. Then the tires won't slip as easy.

1. Drive the wheel loader forward in 1st or 2nd gear into the soil pile while keeping the bucket level to the ground.
2. After the bucket has dug far enough into the soil, bring the front attachment arm up while driving the machine further forward. Occasionally tilt the bucket back to fill the bucket.
3. If it is difficult to penetrate the soil pile with the bucket, tilt and dump the bucket, moving the bucket teeth up and down.
4. Drive the machine with the bucket tilted backward fully and held in the travel posture.

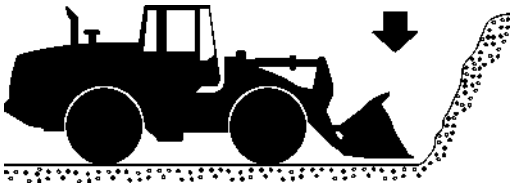

M4GB-05-003 ja

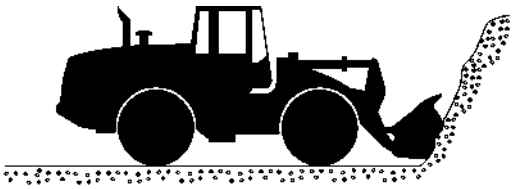

M4GB-05-004 ja

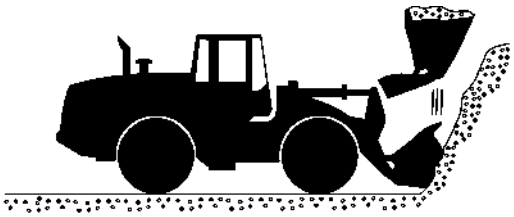

M4GB-05-005 ja

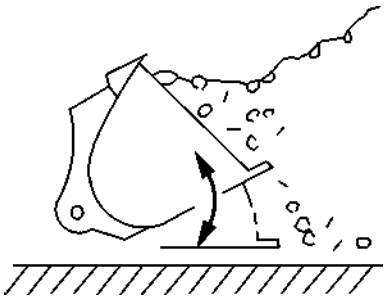

OM0115-Z7 ja

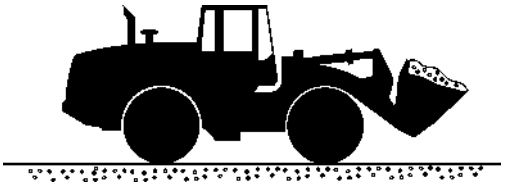

M4GB-05-006 ja

Digging and Loading Level Ground

IMPORTANT

While excavating with the bucket or fork, never apply excessive tractive force to the teeth with the bucket or fork titled forward more than 10°. Failure to do so may result in cracking or damaging the front attachment.

Position the bucket teeth slightly downward (0 to 10 degrees) and dig the ground while driving the machine forward as described below. Always be sure not to apply loads to only to one side of the bucket.

1. Position the bucket teeth slightly below horizontal.
2. While slowly driving the machine forward, lower the lift arm and and gradually dig away soil.
3. Drive forward while operating the digging arm to adjust the digging depth.
4. When the specified digging depth is reached, scoop up the material, and drive the machine with the bucket tilted fully backward and held in the travel posture.

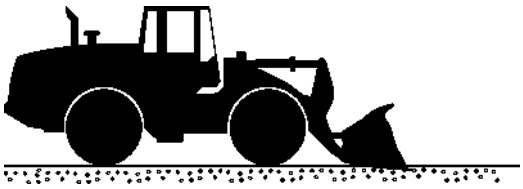

M4GB-05-007 ja

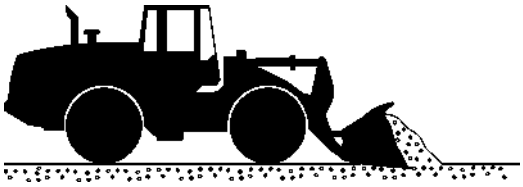

M4GB-05-008 ja

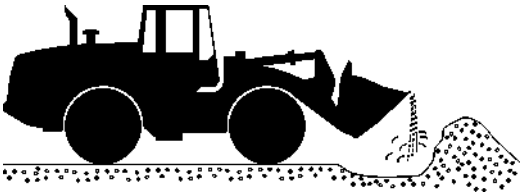

M4GB-05-009 ja

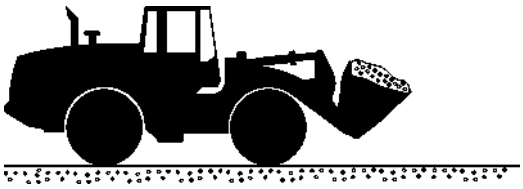

M4GB-05-010 ja

Grading

WARNING

Turn the ride control switch OFF when performing work (soil scooping, land grading, or snow removal) with front attachment control lever in the FLOAT position. When performing work while in AUTO, ride control is active, which will allow the front attachment to move up and down.

IMPORTANT

Perform grading work driving the machine in reverse. Do not grade driving the machine forward. It places severe loads on the front attachment, possibly damaging or causing it to crack.

1. After scooping a load of soil into the bucket, dump the soil a little at a time to disperse it while driving the machine in reverse.

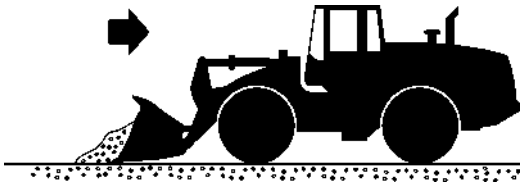

M4GB-05-011 ja

2. Dump the bucket and lower the tips of the bucket teeth to the ground. While driving the machine in reverse, drag the tips of the bucket teeth along the ground to grade the ground surface.

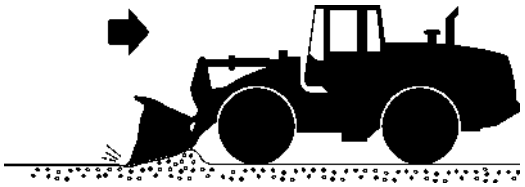

M4GB-05-012 ja

3. Fill the bucket with soil and bring the bucket level with the ground surface. Finish the ground surface utilizing the bucket weight.
   To do this, drive the machine in reverse with the lift arm held in the FLOAT position.

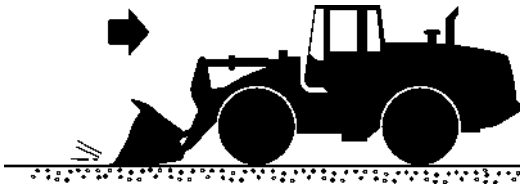

M4GB-05-013 ja

Loading

IMPORTANT

- **Always clear the worksite lanes.**
  Cleaning away excess soil and rock that have spilled onto the driving lane will reduce tire wear and damage.
- **When carrying loads in the bucket, pay attention to the drive lane surface conditions. Drive the machine at a high speed, but not so high that the load spills out of the bucket, while maintaining the bucket at the travel posture.**
- **Shock dumping (hitting the bucket against the bucket stopper) stubborn load material like clay from the bucket can be performed, but do it only as last resort as it may damage the front attachment.**
  Wash the bucket with water to remove stubborn material

Loading is action of dumping loaded material onto a truck or into a hopper.
There are 2 types of transporting methods: The load and carry method or loader and dump truck method. Select either method based on the worksite conditions, and cost and safety aspects.

Load and Carrying Method

WARNING

- **When doing this method, make sure the front of the dumping port is designed with tire stopper (1).**
- **Before raising the lift arm, slightly tilt the bucket back and forth near the ground to stabilize the load material. This will prevent physical damage to the machine or a machine malfunction due to a load spill.**
  Avoid raising the lift arm on a slope.
- **Upon approaching the dumping port with the lift arm of the machine raised to a high enough position, do not operate steering wheel. Drive the machine slowly and do not turn the steering wheel suddenly. Turning the steering wheel suddenly may cause the machine to tip over.**

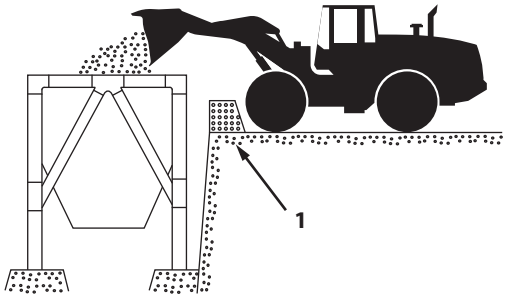

M4GB-05-014-1 ja

The process of loading and carrying using a wheel loader is generally employed for carrying distances of 30 to 100 m. To dump loads into the hopper, first build a berm with an approx. 3° uphill. Make sure the berm has a horizontal crown that extends out about 10 m starting from the dumping port edge, and a tire stopper (1). This design serves to reduce speed naturally and decrease brake usage.

Loader and Dump Truck Combination Method

WARNING

- **Always keep the worksite grounds level. Avoid abrupt steering changes and sudden braking when the bucket is full and the lift arm is raised.**
- **Avoid digging the bucket into a loading face at high speed.**

The loader and dump truck method is carried out by a wheel loader and dump truck pair. Select a method that is the most efficient and best suits the worksite and dump truck.

V-Shape Loading

1. Park the dump truck in a spot located at an angle approximately 60° from the direction that the wheel loader scoops up material. After scooping up the soil with the wheel loader, back up the wheel loader and turn it so that it faces the parked dump truck at a right angle. Then, drive forward to carry the load to the dump truck.
2. Position the wheel loader so that the material can be loaded at the center of the dump body. If the truck body is 2 times longer than the length of the bucket, load from the front to rear.

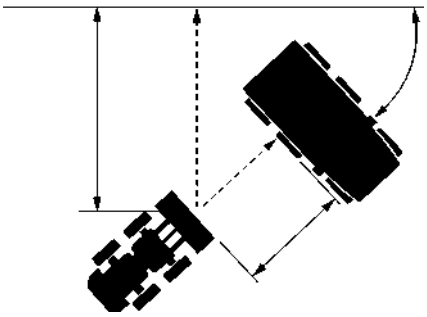

M4GB-05-015 ja

3. When dumping sticky material such as clay, move the control lever back and forth to bang the bucket on the stoppers.
   Make the steering angles as small as possible to maximize machine efficiency.
4. Before raising the lift arm to the maximum height with the bucket full, shake the bucket close to the ground and stabilize the load to prevent the material from spilling off the back of the bucket.

I-Shape Loading

The wheel loader digs at a right angle to the loading face. Scoop up the material into the bucket and back up the wheel loader with the loaded material in a straight line. Then, bring in a dump truck and park it in a spot between the loading face and wheel loader to load the truck with the material.
This method has the shortest load time, a short cycle time and boosts work efficiency. Dump the material downwind whenever possible. Doing so will prevent the engine from sucking in dust and protect the operator's eyes from dust and debris.

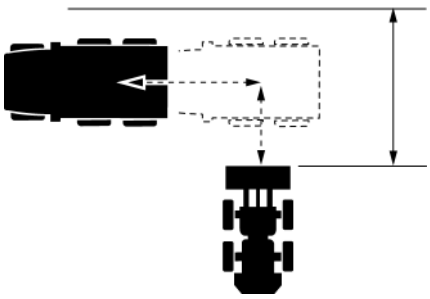

M4GB-05-016 ja

Dozing

IMPORTANT

- **Never attempt to forcibly push sediment (pile) higher than the bucket capacity. The tires may wear prematurely due to slipping and fuel may get wasted.**
- **Do not perform dozing with the bucket in the "DUMP" position as it causes excessive stress on the front attachment structure.**
- **Never apply excessive tractive force to the tooth tips with the bucket titled forward more than 10°. Failure to do so may result in cracking or damaging the front attachment.**

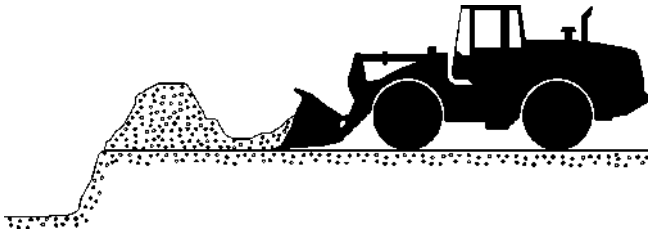

M4GB-05-017 ja

Dozing is wheel loader work that uses bucket in place of a bulldozer blade. This method is used in land reclamation work or for pushing material into a hopper. Set the bucket parallel to the ground and drive the wheel loader forward.

Scooping

WARNING

Never stockpile on soft ground. Steering on soft ground, in particular, may cause the machine to tip over easily.

Be careful not to let the counterweight touch the ground while stockpiling materials.
Always keep in mind that the machine is susceptible to imbalance when doing stockpiling work.

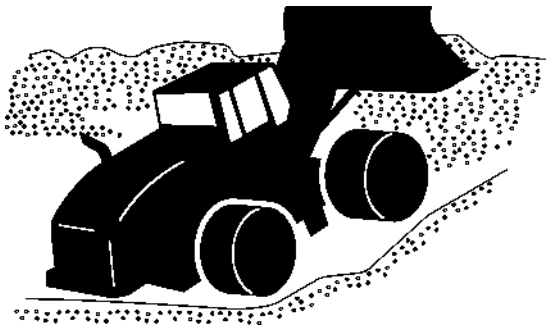

M4GB-05-018 ja

Removing Snow

WARNING

Turn the ride control switch OFF when performing work (soil scooping, land grading, or snow removal) with front attachment control lever in the FLOAT position. When performing work while in AUTO, ride control is active, which will allow the front attachment to move up and down.

CAUTION

Remove snow using the same method utilized in general loading work. However, be mindful of tire slippage and obstacles covered in snow.

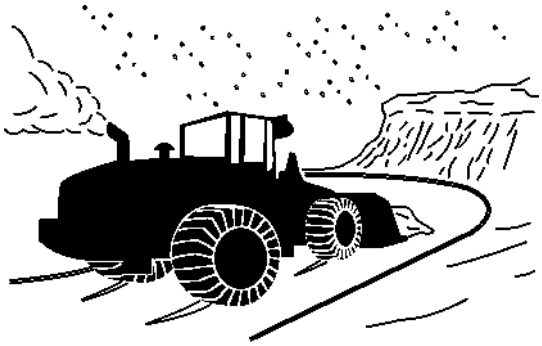

M4GB-05-019 ja

Precautions for removing snow

- Avoid sudden starting, stopping and abrupt steering changes of the machine.
- Use tire chains on all 4 tires.
- Be on the lookout for public utility structures and side walls. Hitting them could damage utility structures and the machine.
  (fire hydrants, manholes, curbs, ditches, etc.)

Lifting Wheel Loader

WARNING

- **Install the lifting tools (optional) and set the articulation lock bar.**
- **Never hoist the machine with personnel onboard.**
- **Never allow personnel under the hoisted machine. Before fully hoisting the machine, check that the hooks are securely attached to the machine and the machine is well balanced while lifting the machine slightly above the ground.**

Hoisting the machine will become necessary when loading it onto a ship or truck to undergo repairs or for transport.

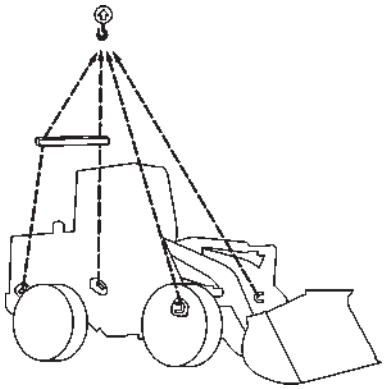

MNEC-05-001 ja

NOTE

Refer to section (6-12) "Hoisting the Machine".

Precautions for After Operations

1. After finishing the day's work, drive the machine to firm, level ground where no possibility of falling stones, ground collapse, or floods are present. Park the machine according to parking procedures.
   (Refer to section (4-21) “Parking”.)
2. Fill the fuel tank until full.

CAUTION

Wash the machine immediately after using it and then apply a coat of anti-rust oil to protect the machine against rust. If the machine is used without being washed and lubricated, rust will develop, which could possibly lead to oil leaks.

IMPORTANT

If heavy rain is expected or the machine is to be stored, wrap the muffler with a tarp to prevent water from entering it.

3. Clean the machine.
4. If anti-freeze or long life coolant is not used for the winter, be sure to drain the coolant from the radiator and the engine jacket.
   After removing the coolant, attach a “No Radiator Coolant” sign in an easy-to-see place.
5. Maintenance for long term machine storage after engaging in snow removal. (Refer to section (10-1) “Storing the Machine”.)
   “Anti-freeze agents” such as salt (sodium chloride or calcium chloride) are scattered on snow roads. When the machine is stored for a long time after engaging in snow removal work, do the following maintenance to protect the machine from salt corrosion (rust) and damage.

IMPORTANT

Be careful not to spray water directly on electrical parts, wires, and connectors.
Lights such as headlights, work lights, and turn signal lights are waterproof.

5.1. Clean and dry the machine thoroughly. Clean each cylinder rod (plated areas) and the radiator with extra care.

5.2. After placing the machine in its storage posture, carefully coat each cylinder rod (plated areas) with anti-rust oil.

5.3. Lubricate all pins.
Refer to section (7-13) “Greasing” in the Inspection and Maintenance Guide List.

CAUTION

When removing the batteries, disconnect the ground cable from the battery terminal first (covered with a black vinyl cap).

5.4. Remove the batteries and store them in a cool dark place. When the batteries are not removed, disconnect the ground terminal cable.

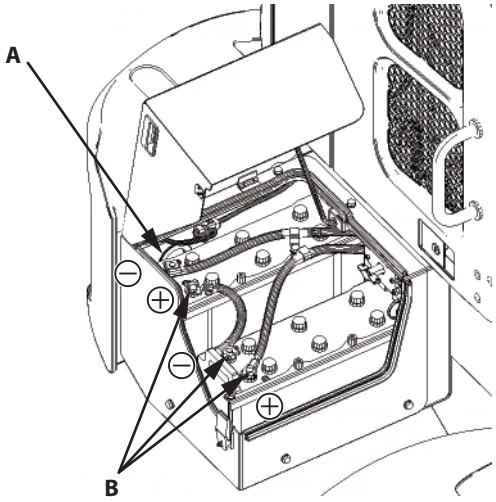

MNTL-05-002-1 ja

A: Ground Side (Black Vinyl Cap)

B: (Red) Vinyl Cap

Payload Checker (ZW140-7, 160-7 only)

Introduction

The payload checker shows the weight of sediment loaded in the bucket as well as the weight of the payload in the dump truck. Devices like the special lift arm and special attachments have different vehicle specifications. Consequently, their displayed loads will be different. Use their displayed loads simply for reference.

The payload checker is not a precision scale.
Use the displayed numbers only as a reference and not for commercial transactions.

Do not modify this device. Doing so will make weighing inaccurate.

If the bucket and lift arm are swapped, the swapped attachment must be reconfigured. Consult Authorized Dealer.

Avoid strongly banging against the device. Strong impacts may damage the device or make it malfunction.

The payload checker is available only for machines equipped with a bucket at shipment, not for machines equipped with anything other than a bucket.

Consult Authorized Dealer to enable the device if a bucket is installed after shipment.

Function Button Switch

The control levers are equipped with the following function button switches for quick operation of the payload checker.

1- Add Load Switch
Press when the bucket is full. Added to the short total.

2- Truck Clear Switch
Press when the truck is full.
The short total is saved, and the memory is cleared for the next operation.

3- Tip-off Switch
Used for tip-off mode operation. Refer to section (5-74) “Tip-off Mode”.

4- Cancel Switch
Cancels (resets) the current payload in the bucket.

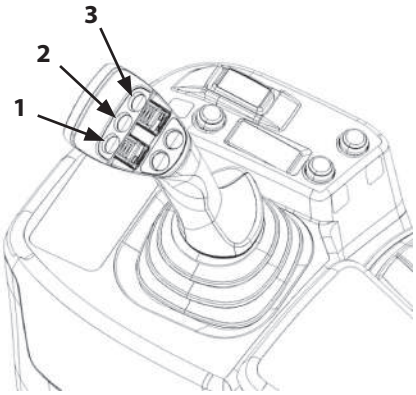

MNUD-05-004-5 ja

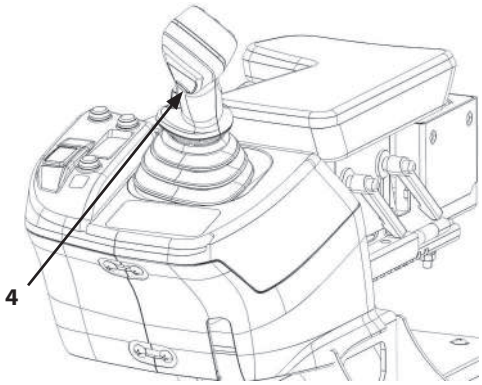

MNUD-01-029-3 ja

Payload Checker Monitor Display

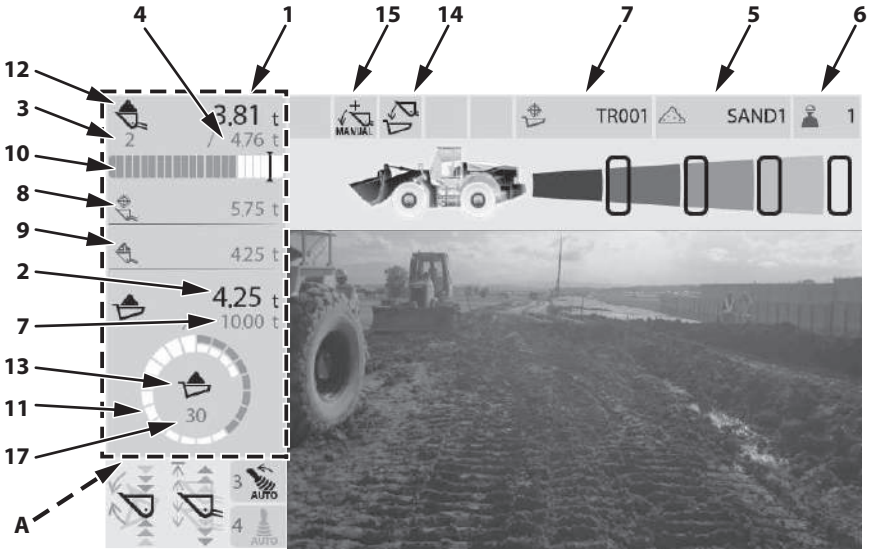

A: Mode A

MNTL-01-233-8 ja

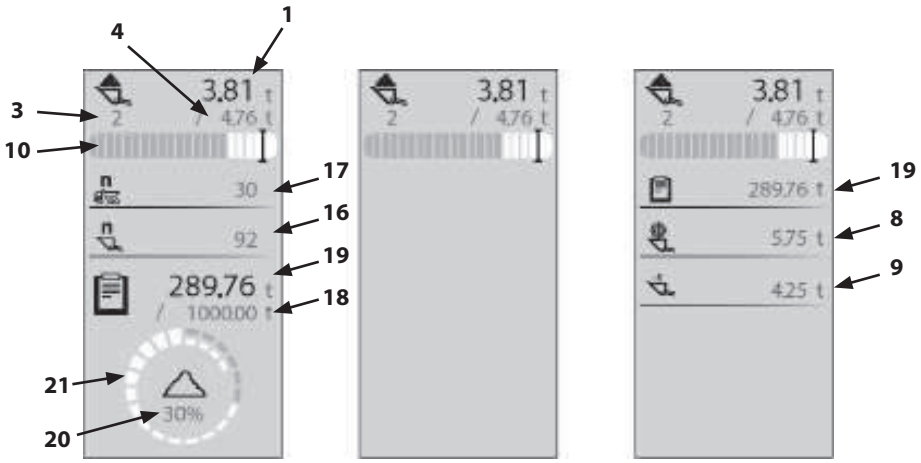

MNUD-05-021-1 ja

Mode B Mode C Mode D

1- Bucket Payload
2- Cumulative Dump Truck Load
3- Buckets Loaded Count
4- Rated Payload
5- Target Material
6- Operator No.
7- Target Load/Target Load Name
8- Amount To Go/Overload Weight
9- Weight of Last Bucket Loaded
10- Bucket Level Gauge
11- Truck Level Gauge
12- Bucket Icon
13- Truck Icon
14- Tip-off Mode Icon
15- Add Mode Icon
16- Total Loads Count
17- Trucks Count
18- Total Target Load
19- Total Load
20- Progress
21- Progress Level Gauge

Bucket Payload (1)

Displays the weight of the material (payload) currently loaded in the bucket.

Pressing cancel switch (2) on the control lever after the payload is displayed makes the load display go to bar display (--.-- t).

The display items and text color differ depending on the results of weighing the payload.

List of Display Changes

State	Display (unit: t)	Text Color
Not ready to weigh payload	--.--	Gray
Ready to weigh payload	0.00	Gray
Weighing payload	Value of calculated load	Gray
Weighing payload successful	Value of calculated load	White
If value from weighing payload is undetermined	(Hidden)	
Communication interrupted	(Hidden)	

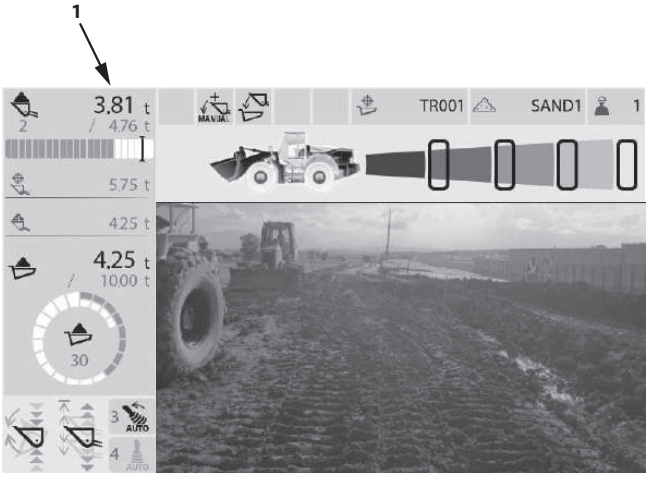

MNTL-01-233-9 ja

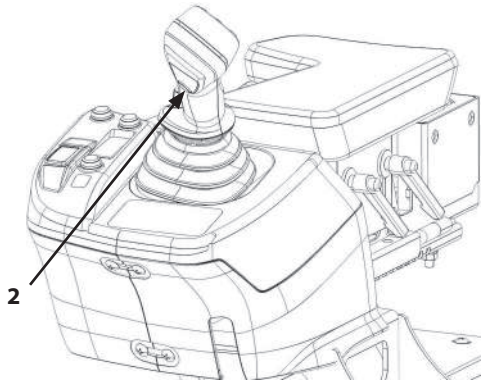

MNUD-01-029-4 ja

Cumulative Dump Truck Load (2)

Displays the current weight loaded on the dump truck (cumulative loaded weight).

After a load is added, pressing the cancel switch (1) decreases the buckets loaded count by 1 and subtracts the load added just before.

Clearing the cumulative dump truck load:
Pressing truck clear switch (3) resets the cumulative dump truck load to 0.00 t.

Display routine at machine restart:
Even when the machine is restarted (key ON→OFF→ON), the cumulative dump truck load is displayed before restarting.
If the date changes and/or the key is turned to OFF, load data is deleted automatically, returning the cumulative dump truck load to 0.00 t.

NOTE

- *Pressing cancel switch 2 times does not subtract the load weight two times before from the cumulative loaded weight.*
- *The cancel function described above is available until weighing of the next load starts.*

The display items and text color differ depending on the results of weighing the payload.

List of Display Changes

State	Display (unit: t)	Text Color
Default state (truck empty)	0.00	White
Estimated load (tip-off mode ON)	Value of calculated load	Gray
Confirm load	Value of calculated load	White
Weighing payload successful	Value of calculated load	White
If value from weighing payload is undetermined	(Hidden)	
Communication interrupted	(Hidden)	

MNTL-01-233-10 ja

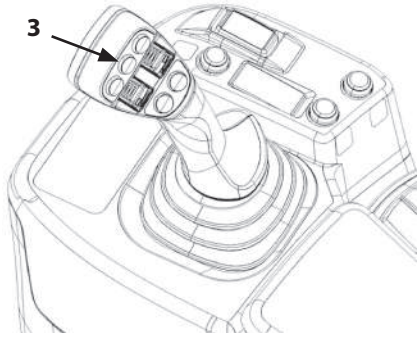

MNUD-05-004-6 ja

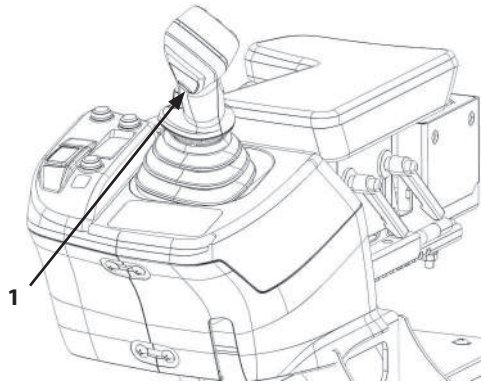

MNUD-01-029-5 ja

Rated Payload (4)

Displays the rated payload of the bucket.

IMPORTANT

The rated payload will depend on the type of attachment and lift arm.
The default value is entered based on the specs (attachment and lift arm) provided when shipped from the factory. Consequently, the rated payload must be input again if changes to the specifications were made after shipment. Contact Authorized Dealer to have them re-enter the rated payload.

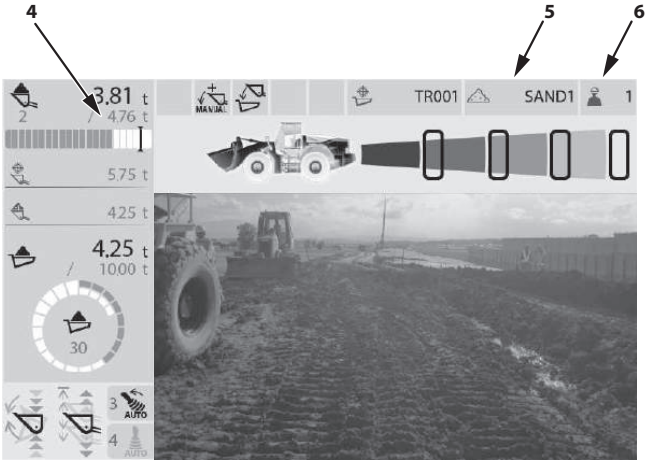

MNTL-01-233-11 ja

Target Material (5)

Displays the currently selected target material.

The name of target material can be set and saved as desired using up to a total of 20 alphanumeric characters and symbols.

Target materials can be changed on the Target Material Select screen in the Main Menu.

NOTE

Refer to section (5-40) "Selecting Target Material".

Operator No. (6)

Displays the currently selected operator No.

The operator No. can be changed with the "Operator Setting" on the Start screen and in the Main Menu.

NOTE

Refer to section (1-81) "Operator Setting Screen".

Target Load/Target Load Name (7)

The operator is free to change the target load to any possible value for the target value of the cumulative dump truck load (2).

A maximum of 10 types of target loads can be saved and the operator can configure them with any target load name and target load value.

NOTE

Refer to section (5-45) "Changing the Target Load Setting Value".

Target loads can be changed on the Target Load Select screen in the Main Menu.

NOTE

Refer to section (5-44) "Selecting the Target Load".

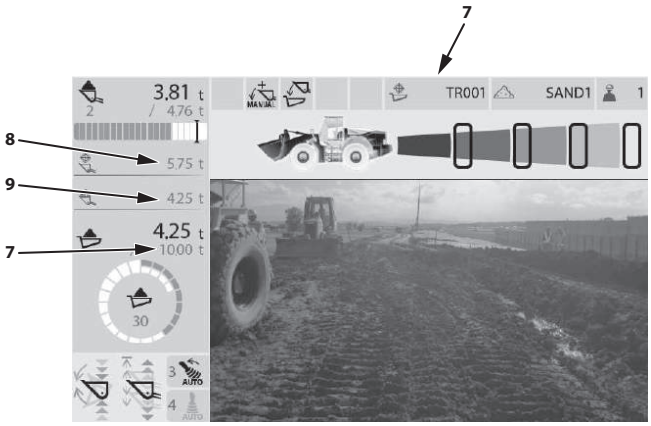

MNTL-01-233-12 ja

Amount to Go/Overload Weight (8)

Displays the value (amount to go) obtained by subtracting the cumulative dump truck load from the weight of the target load.

Weight of Last Bucket Loaded (9)

Displays the weight of the most recent load that was added to the cumulative dump truck load.

This is used for reference when canceling the load weight after loading a truck.

Bucket Level Gauge (10)

The level gauge displays the percentage of the bucket payload up to 100% (full) of the rated payload of the bucket.

The scale of the level gauge has 20 hashes, and the load gauge increases in 5% increments (lights green). When the load gauge exceeds 20 hashes (100% full), the bucket is overloaded and the gauge turns red.

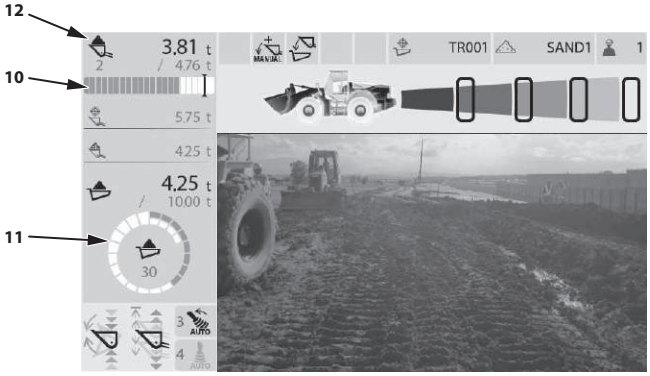

MNTL-01-233-13 ja

Truck Level Gauge (11)

The scale of the level gauge has 20 hashes, and the load gauge increases in 5% increments (lights green). When the load gauge exceeds 20 hashes (100% full), the truck is overloaded and the gauge turns red.

NOTE

The maximum scale on the level gauge is 24 (120%). If the full ratio is 120% or higher, the maximum scale is displayed.

Bucket Icon (12)

The bucket icons change with the weighing status.

Icon	Color	State
	White	Weighing function ON
	Gray	Weighing function OFF
	Red	System Error

Tip-off Mode Icon (14)

The icon for the tip-off function changes based on the setting mode and ON/OFF status.

NOTE

The tip-off function is for adjusting the load weight for final loading. Refer to section (5-58) "Selecting the Tip-off Mode".

Icon	State
	Tip-off to Truck
	Tip-off to Pile
(Hidden)	Tip-off Disabled

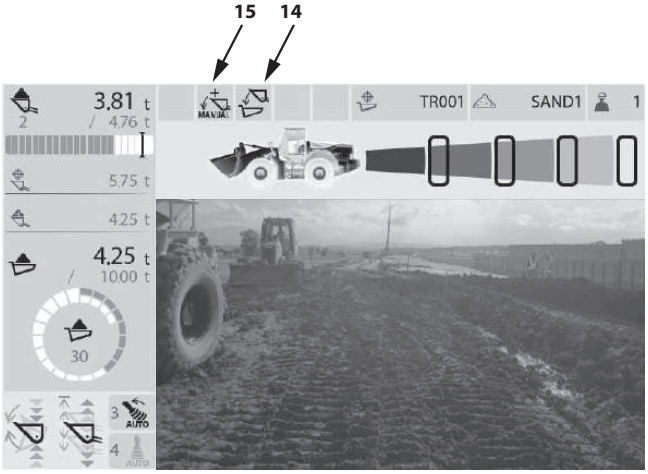

MNTL-01-233-14 ja

Add Mode Icon (15)

This icon changes based on the add truck selection mode.

Icon	State
AUTO	Auto-add Mode ON
MANUAL	Manual-add Mode ON

Total Loads Count (16)

Displays the number of buckets loaded for the day (total loads count).
The total loads count is displayed only in mode B.

Differences with the buckets loaded count:
The buckets loaded count is reset when the confirm truck switch is pressed, but the total loads count is not reset.

Mode B

MNTL-01-240-1 ja

Trucks Count (17)

Displays the number of confirmed trucks (trucks count).

NOTE

The location where the trucks count is displayed depends on the screen mode.

Mode A

MNTL-01-233-15 ja

Target Total Load (18)

Displays the target total load for the day.
The total loads count is displayed only in mode B.

The operator is free to change the target total load to any possible value for the target value of the payload.

NOTE

For details on how to change the target total load, refer to section(5-45) "Changing the Target Load Settings".

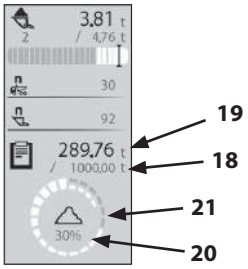

Mode B

MNUD-05-022-1 ja

Total Load (19)

Displays the total weight of (total loads weight) buckets loaded for the day. The total loads weight is displayed only in modes B and D.

After adding a load, press the cancel switch to obtain the total load by subtracting the value of the weight for the last bucket loaded from the total payload.

Differences with cumulative dump truck load:
The cumulative dump truck load is reset when the confirm truck switch is pressed, but the total payload is not reset.

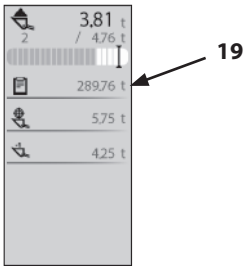

Mode D

MNUD-05-062-1 ja

Display routine at machine restart:
Even when the machine is restarted (key ON→OFF→ON), the total payload is displayed before restarting.
If the date changes and/or the key is turned to OFF, load data is deleted automatically, returning the total payload load to 0.00 t.

Progress (20)/Progress Level Gauge (21)

The level gauge displays the percentage (progress) of the total load to 100% of the target total load.
The progress is displayed only in mode B.

Display Ranges and Default Values

Numeric Values and Text Strings (Home Screen)

Item	Display Ranges	Unit	Resolution	Default Values (Factory Default)
Bucket Payload	-9.99 to 99.99	t	0.01	- -.- -
Cumulative Dump Truck Load	0.00 to 9999.99	t	0.01	0.00
Buckets Loaded Count	0 to 999	No. of buckets	1	0
Rated Payload	0.00 to 99.99	t	0.01	Set based on machine specifications
Load Material	5 digit Alphanumeric			M1
Operator No.	0 to 9	-	1	0
Target Load	0.00 to 9999.99	t	0.01	10.00 (T1)
Target Load Name	5 digit Alphanumeric			T1
Amount To Go/Overload Weight	0.00 to 9999.99	t		10.00
Weight of Last Bucket Loaded	0.00 to 99.99	t		10.00
Total Loads Count	0 to 9999	-		0
Trucks Count	0 to 999	-		1
Target Total Load	0.00 to 99999.99	t	0.01	1000.00
Total Payload	0.00 to 99999.99	t	0.01	0.00
Progress	0 to 120	%	5	0

Setting Mode

Item	Display range	Default Values (Factory Default)
Tip-Off Mode	Tip-Off (Pile) Tip-Off (Truck)	Tip-Off (Truck)
Add Mode	Auto-Add, Manual-Add	Auto-Add
Bucket Overload Warning	ON, OFF	ON
Dump Truck Overload Warning	ON, OFF	ON

Numeric Values and Text Strings (Settings)

Item	Display range	Units	Resolution	Default Values (Factory Default)
Zero Calibration	-9.99 to 99.99	t	0.01	Factory Set Value
Target Load T1	0.00 to 9999.99	t	0.01	10.00
				20.00
				30.00
				40.00
				50.00
				60.00
				70.00
				80.00
				90.00
				100.00
Target Load T1 Name	5 digit Alphanumeric			T1
				T2
				T3
				T4
				T5
				T6
				T7
				T8
				T9
				T10

Item	Display range	Units	Resolution	Default Values (Factory Default)
Load Material M1 Name	5 digit Alphanumeric			M1
				M2
				M3
				M4
				M5
				M6
				M7
				M8
				M9
				M10
				M11
				M12
				M13
				M14
				M15
				M16
				M17
				M18
				M19
				M20

Weighing Flowchart

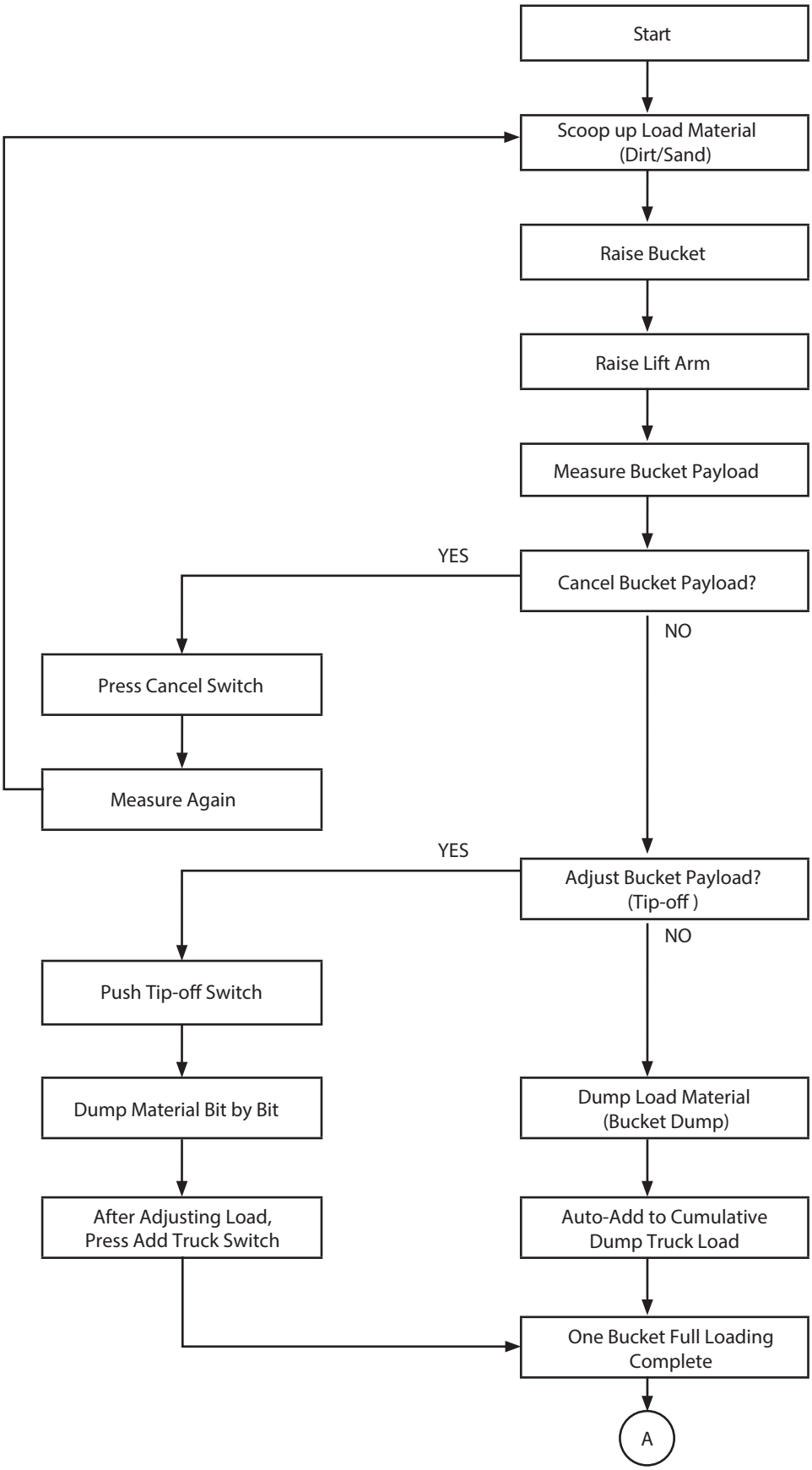

MNTL-05-003 en_GB

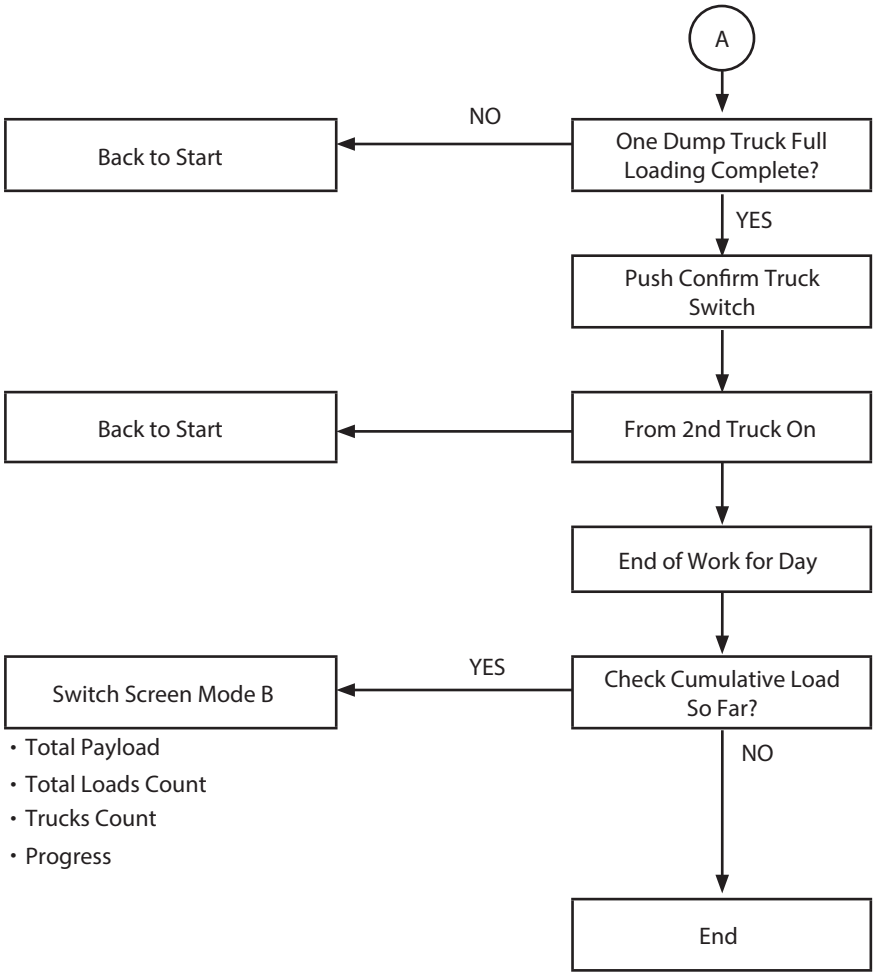

MNTL-05-004 en_GB

Load Measurement Procedure

1. Turn the key switch of the machine ON. The Home screen is displayed on the sub monitor.
2. Tilt the bucket with the loaded material all the up.

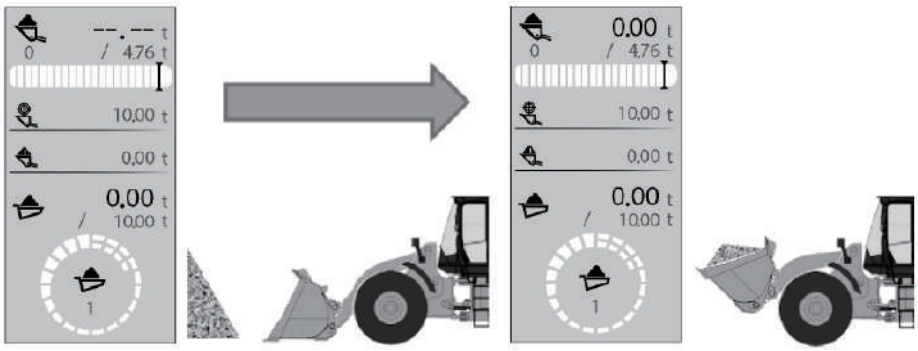

MNUD-05-045 ja

Before Digging | Bucket Full Tilt (After Digging)

3. Raise the lift arm holding the fully tilted bucket.

NOTE

When weighing a load, stop the machine and keep the engine speed stable, then slowly raise the lift arm to display an accurate value.

4. When the lift arm reaches the preset angle, the weight of the load material in the bucket is displayed in the bucket payload field.

Displaying Unconfirmed Loads

IMPORTANT

The partial processed results (unconfirmed load) of the calculated bucket load are displayed in the bucket payload field until the lift arm reaches the preset angle. This unconfirmed load cannot guarantee the accuracy of the calculated bucket load since there is not enough existing data for weighing. Check the load value that is displayed after reaching the preset angle (confirmed load) for the correct bucket payload.

NOTE

Unconfirmed loads are displayed in gray text (1), while confirmed loads are in white (2). For details, refer to section (5-24) "Bucket Payload".

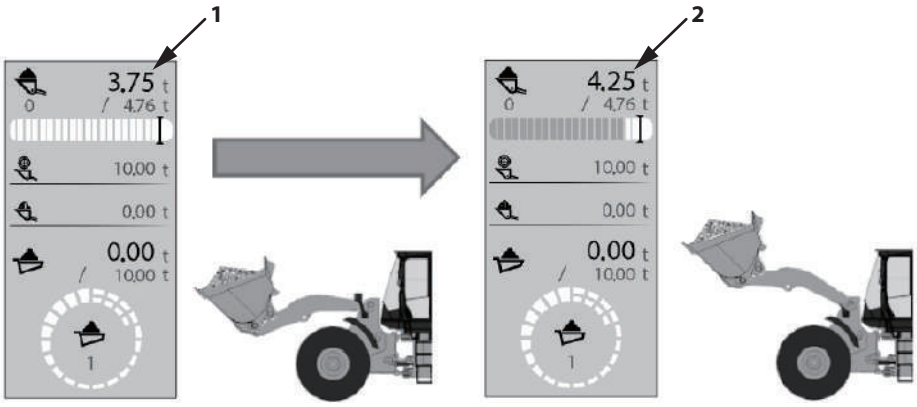

MNUD-05-046-2 ja

Raise Lift Arm (Weighing) | Stopping Lift Arm (Weight Confirmed)

5. Choose an action below based on the value of the bucket payload.
   - To make the precise weight adjustments→go to tip-off function
   - To cancel or reweigh the load→go to cancel load function
   - To load onto dump truck→go to step 6
6. Dumping the bucket and releasing the bucket payload adds the bucket payload to the cumulative dump truck load.

IMPORTANT

There are 2 ways to add to the cumulative dump truck load, either by manual-add or auto-add. The procedure above shows the loading weighing operations when the auto-add mode is selected. For details on when the manual-add mode is selected, refer to section (5-79) "Add Mode".

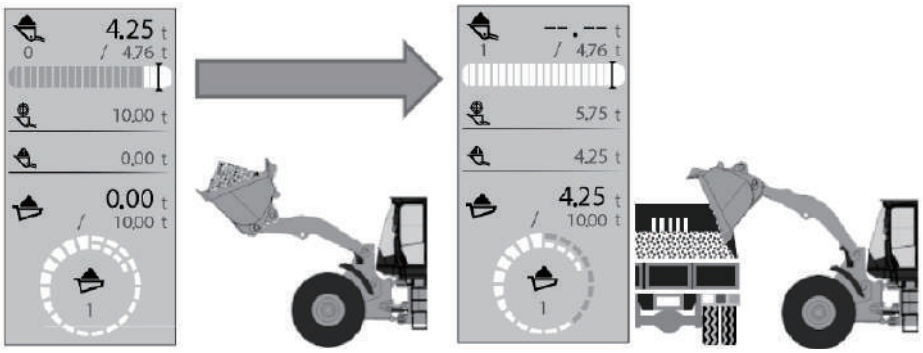

MNUD-05-047 ja

After Truck Loaded

7. Repeat steps 2 through 6.
8. Once a truck is loaded with material, press truck clear switch (1) on the control lever. The following data for one dump truck is saved in the internal memory.
   Pressing the confirm truck switch increases the trucks count display by (+1). Also, the bucket payload display will be shown as a bar and the cumulative dump truck load will go to 0.00 t.

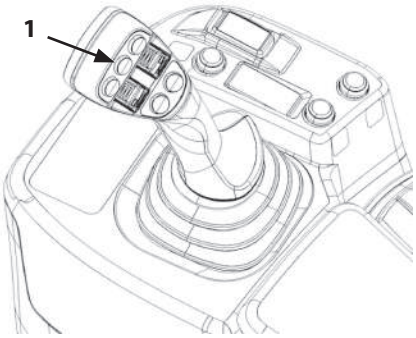

MNUD-05-004-7 ja

NOTE

- *The data in the memory is saved if the key is turned OFF during the day. The memory is deleted when the date changes.*
- *The cumulative data up till then can be confirmed on the mode B Home screen.*
  - *Total Loads Count (3)*
  - *Trucks Count (2)*
  - *Total Payload (4)*
  - *Progress (5)*
  - *Progress Level Gauge (6)*

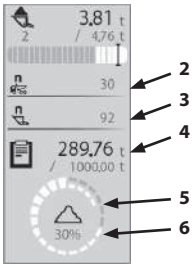

Mode B

MNUD-05-022-2 ja

Payload Checker Related Menu Screen Structure

The sub monitor menus for the payload checker are arranged as follows.

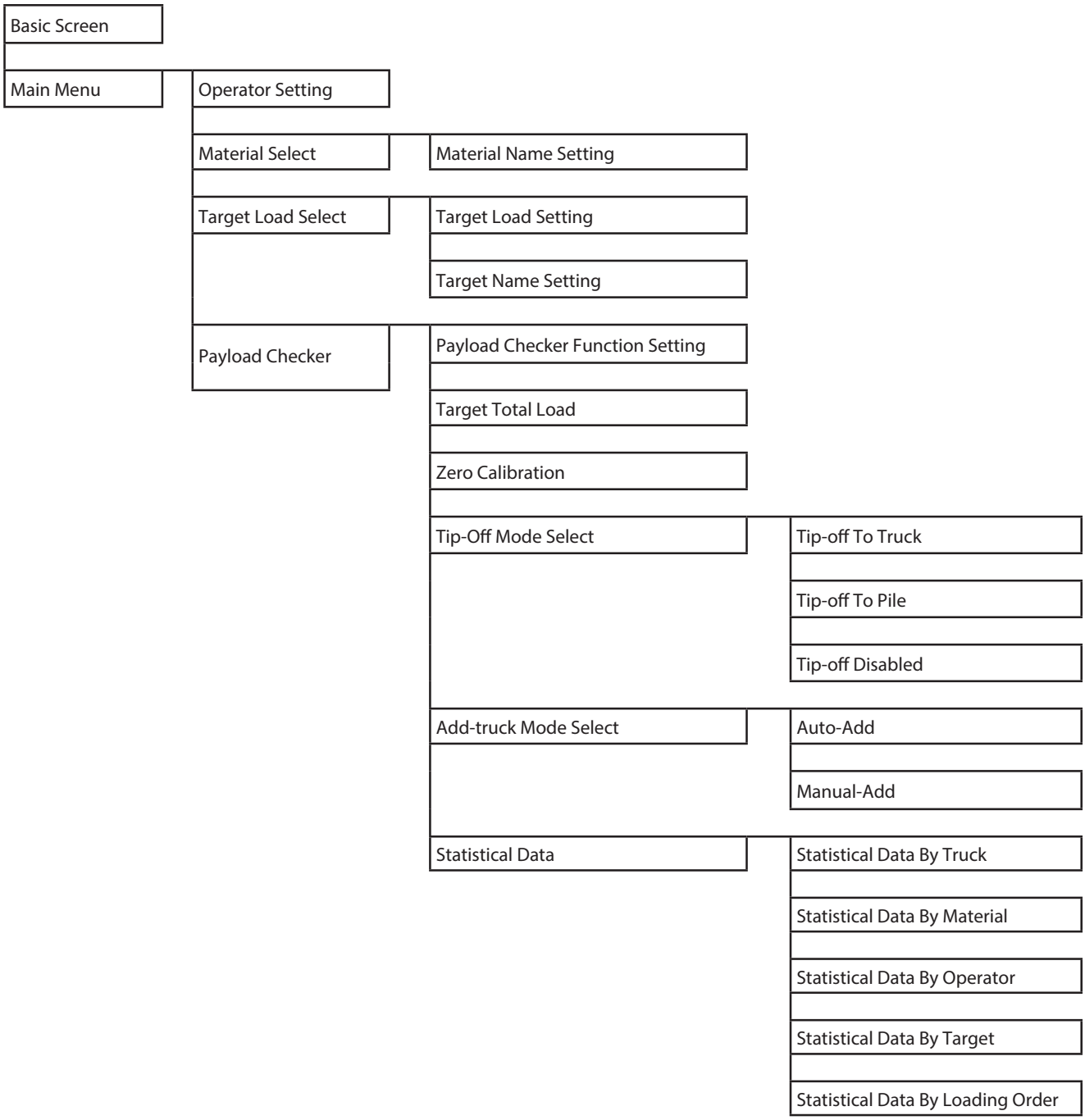

MNTL-05-005 en_GB

Payload Checker Menu Operation

Material Select

This function allows the loaded material to be changed.

1. Check that bucket payload (1) is displayed as a bar (--.--t).

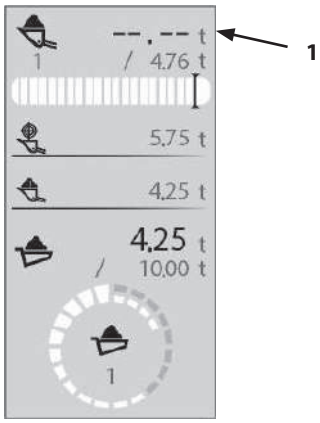

MNUD-01-321-1 ja

2. Press selector knob (2) to display the Main Menu.

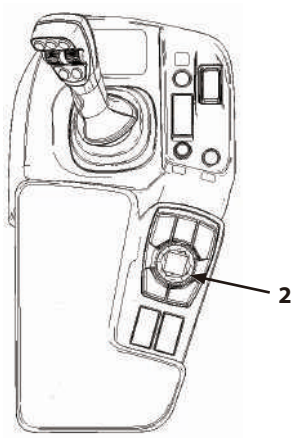

MNTL-01-049-2 ja

3. Rotate selector knob (2) to highlight Material Select (3), and push selector knob (2).

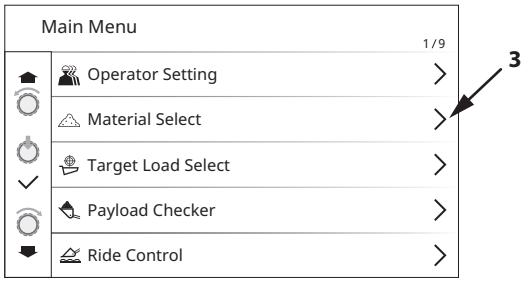

MNUD-01-263-4 en_GB

4. Rotate selector knob (2) to highlight the material to be loaded.
5. Push selector knob (2). The display returns to the Home screen and the selected load material is displayed at the top of the Home screen.

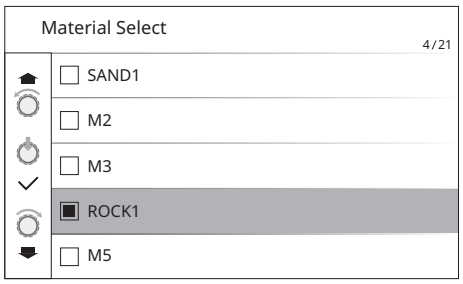

MNTK-01-322 en_GB

NOTE

- *Select "Material Name Setting" in step 4 to go to the Material Name Setting screen. Once there, the load name reverts to that of the load material before the change. For details on changing the names of load materials, refer to the next page.*
- *The selected screen appearance on the Main Menu is saved when the key is turned OFF. When the key is turned ON again, the screen appearance shown at the time the key was OFF is preserved.*

Material Name Setting

The name of load materials use up to 5 alphanumeric characters and symbols and can be changed on this screen.

1. Press selector knob (1) to display the Main Menu.

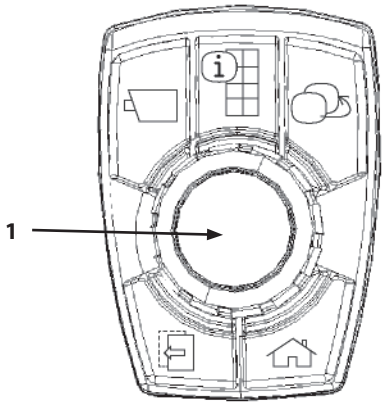

MNUD-01-252-11 ja

2. Rotate selector knob (1) to highlight Material Select (2), and push selector knob (1).

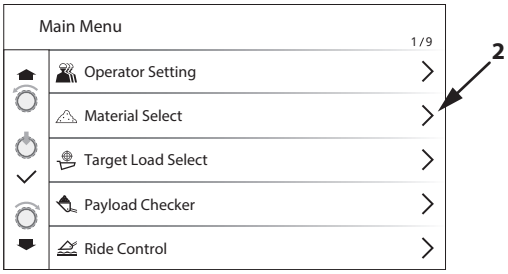

MNUD-01-263-11 ja

3. Rotate selector knob (1) to highlight Material Name Setting (3), and push selector knob (1).

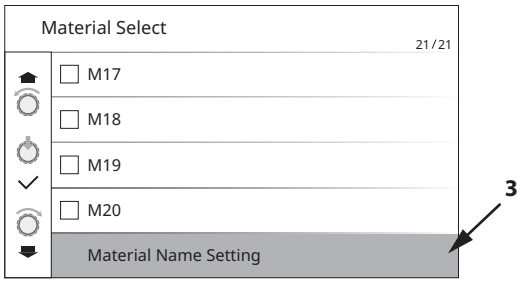

MNTK-01-324-1 en_GB

4. Select the desired load material and push selector knob (1). ("ROCK1" (4) is selected as an example)

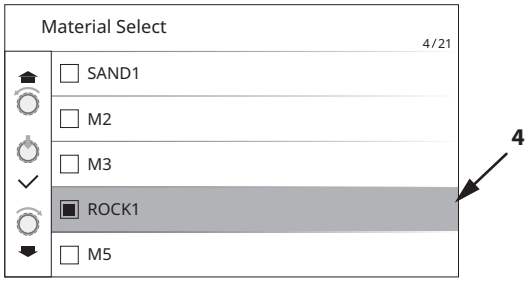

MNTK-01-322-1 en_GB

5. The Material Name Setting screen is displayed.
6. Rotating selector knob (1) counterclockwise scrolls the highlighted item from the 1st digit (5) of the name through to the 5th digit (6), Set button (7), and Clear All button (8), then returns to the 1st digit (5).
   Rotating selector knob (1) clockwise scrolls the highlighted item in reverse order; from the 1st digit (5) of the name, Clear All button (8), Set button (7), the 5th digit (6) through to the 1st digit (5).

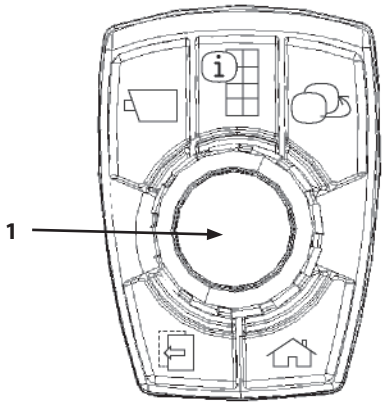

MNUD-01-252-11 ja

7. Highlight a desired character and push selector knob (1). ("C" is selected as an example.)

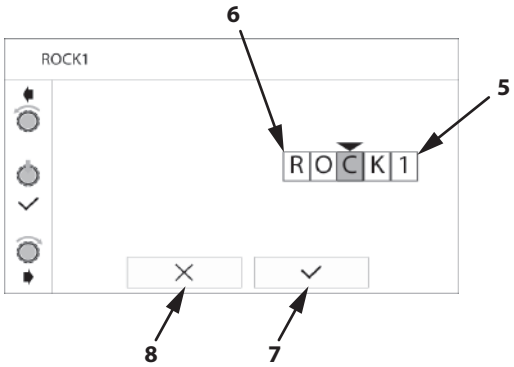

MNUD-01-325-2 ja

8. The 5-digit vertical character bar (9) appears. Rotating selector knob (1) scrolls through the characters.
   Clockwise (bar (9) scrolls up):
   A→B ... Y→Z→0→1 ... 8→9→-→.→/→t→_(space) →A→B ...
   Counterclockwise (bar (9) scrolls down):
   A←B ... Y←Z←0←1 ... 8←9←-←.←/←t←_(space) ←A←B ...

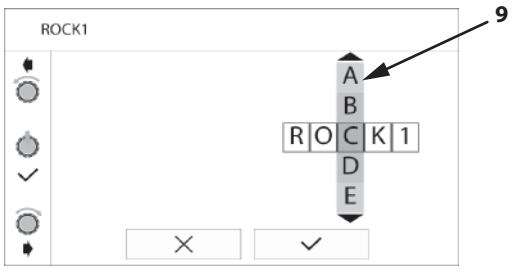

MNUD-01-326-1 ja

9. Stop scrolling when a desired character appears in the active input box of the name line field. ("N" is selected as an example.)

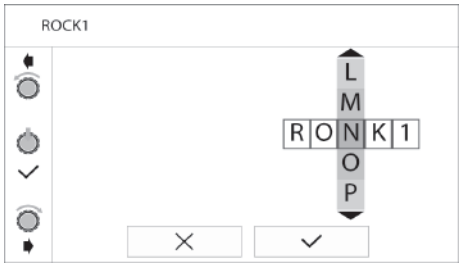

MNUD-01-327 ja

10. Push selector knob (1) to finalize the character selection.
(In this example, "ROCK1" is changed to "RONK1")

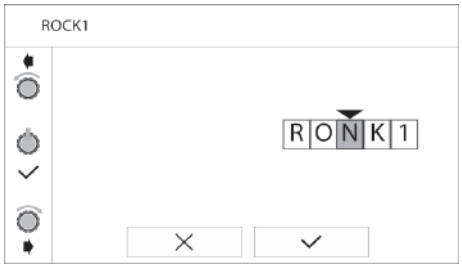

MNUD-01-328 ja

11. Rotate selector knob (1) to select Set button (7).

MNUD-01-329-2 ja

12. Push selector knob (1) to finalize the changed name.

NOTE

Selecting Clear All button (8) deletes all 5 digits simultaneously.

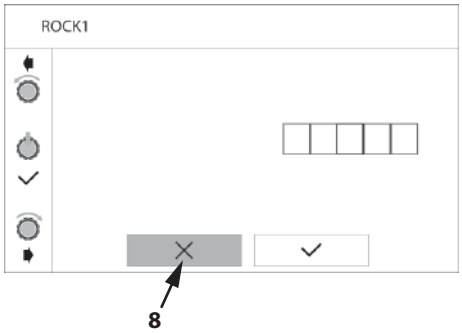

MNUD-01-330-2 ja

Target Load Select

Up to 10 types of target loads can be saved. Select the target load.

1. Check that bucket payload value (1) is displayed as a bar (--.--t).

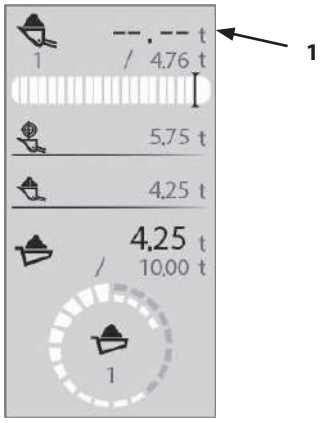

MNUD-01-321-1 ja

2. Press selector knob (2) to display the Main Menu.

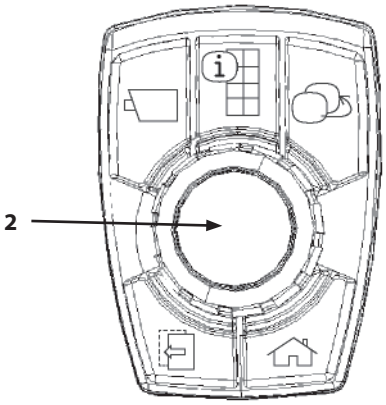

MNUD-01-252-12 ja

3. Rotate selector knob (2) to highlight "Target Load Select" (3), and push selector knob (2).

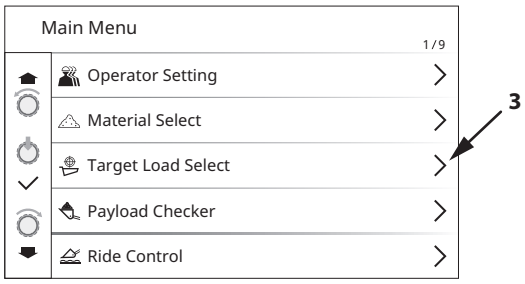

MNUD-01-263-6 en_GB

4. Rotate selector knob (2) to highlight the desired target load.
5. Push selector knob (2). The display returns to the Home screen and the selected target load is displayed at the top of the screen.

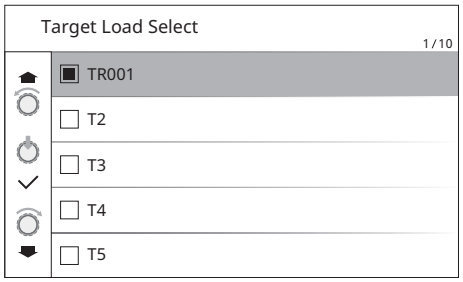

MNUD-01-331 en_GB

NOTE

Selecting either "Target Load Setting" or "Target Name Setting" in step 3 changes the display to the relevant setting screen. If this is done, the target load prior to the change is selected. Refer to the next section.

Target Load Setting

The operator can change the target load value in the range of 0.01 to 9999.99 t by 0.01 t units.

1. Press selector knob (1) to display the Main Menu.

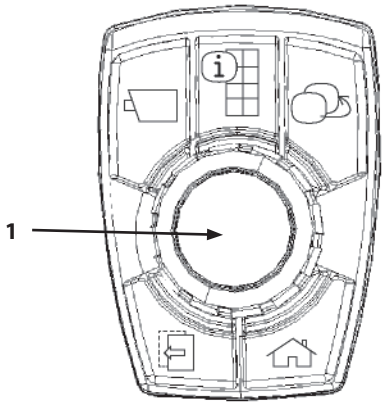

MNUD-01-252-11 ja

2. Rotate selector knob (1) to highlight “Target Load Select” (2), and press selector knob (1).

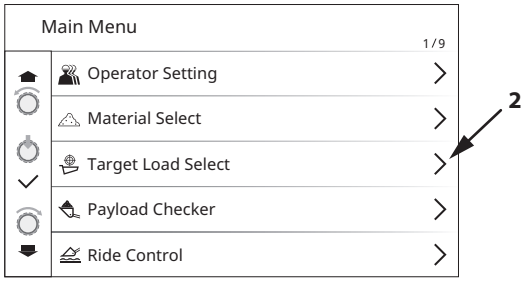

MNUD-01-263-7 en_GB

3. Rotate selector knob (1) to highlight “Target Load Setting” (3), and press selector knob (1).

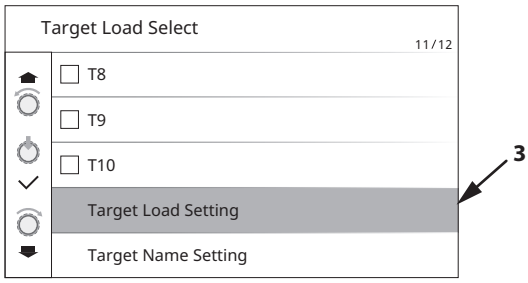

MNUD-01-323-1 en_GB

4. Highlight the desired target load and press selector knob (1). (In this example, “TR001” (4) is selected.)

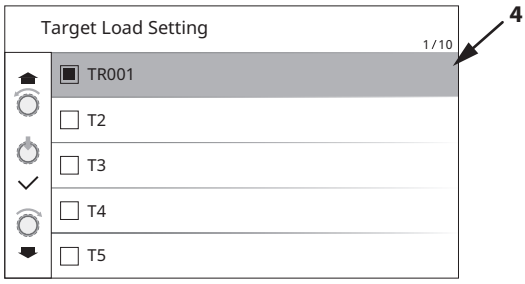

MNUD-01-344-1 en_GB

5. The Target Load Setting screen is displayed.
6. Rotating selector knob (1) counterclockwise scrolls the highlighted item from the 2nd decimal point digit (5) of the value through to the 4th digit (6), Set button (7), and Clear All button (8), then returns to the 2nd decimal point digit (5).
   Rotating selector knob (1) clockwise scrolls the highlighted item in reverse order; from the 2nd decimal point digit (5) of the value, Clear All button (8), Set button (7), the 4th digit (6) through to the 2nd decimal point digit (6).

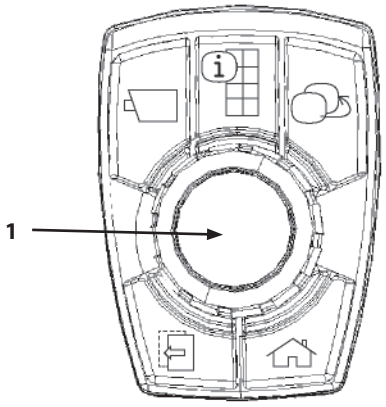

MNUD-01-252-11 ja

7. Highlight the desired digit and press selector knob (1). (In this example, the 3rd digit is highlighted.)
8. The 5-digit vertical character bar (9) appears.
   Rotating selector knob (1) scrolls through the characters.
   Clockwise (bar (9) scrolls up):
   0→1→2 ... 8→9→0 ...
   Counterclockwise (bar (9) scrolls down):
   0←1←2 ... 8←9←0 ...

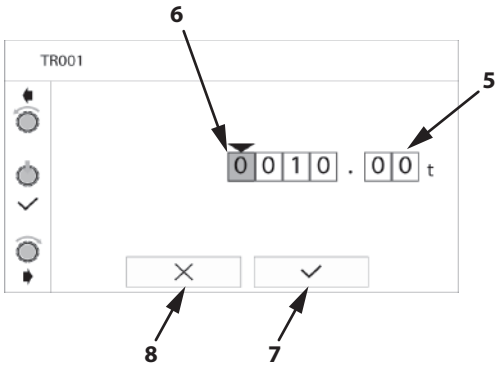

MNUD-01-332-2 ja

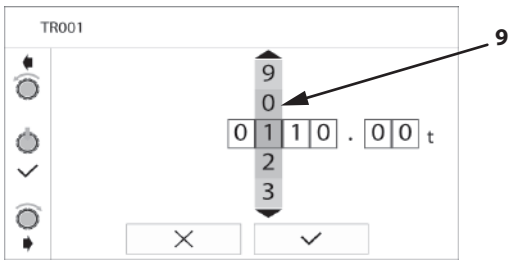

MNUD-01-333-1 ja

9. Stop scrolling when the desired number appears in the active input box of the name line field. (In this example, “1” is highlighted.)

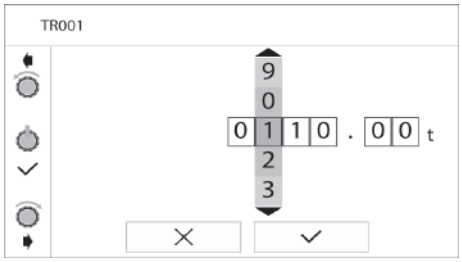

MNUD-01-333 ja

10. Push selector knob (1) to finalize the character selection. (In this example, "10.00" is changed to "110.00")

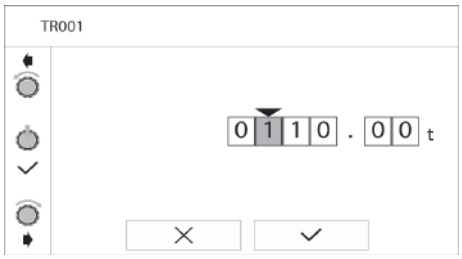

MNUD-01-335 ja

11. Rotate selector knob (1) to select Set button (7).

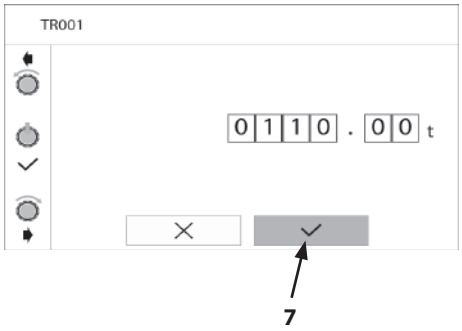

MNUD-01-336-2 ja

12. Push selector knob (1) to finalize the changed target load value.

NOTE

Selecting Clear All button (8) changes all digits to “0” simultaneously.

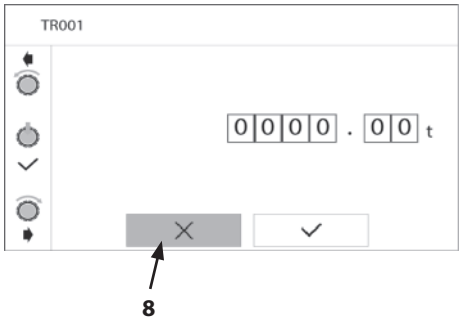

MNUD-MT-002-1 ja

Target Name Setting

The operator can change the target load name.

1. Press selector knob (1) to display the Main Menu.

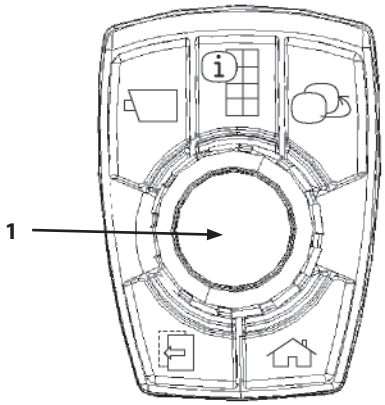

MNUD-01-252-11 ja

2. Rotate selector knob (1) to highlight "Target Load Select" (2), and push selector knob (1).

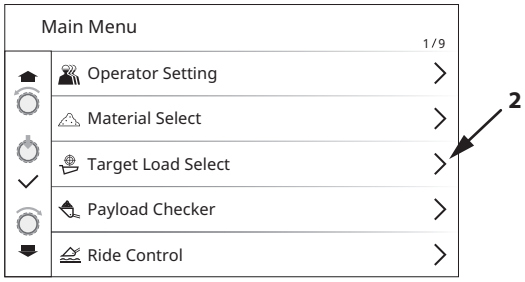

MNUD-01-263-7 en_GB

3. Rotate selector knob (1) to highlight "Target Name Setting" (3), and push selector knob (2).

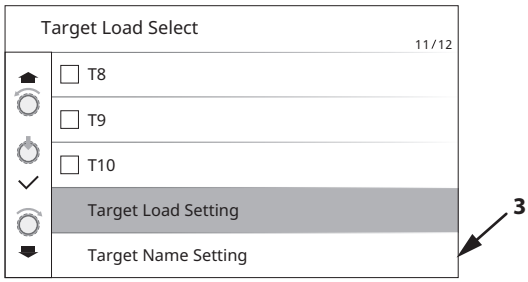

MNUD-01-323-2 en_GB

4. Select the desired target load and push selector knob (1). ("TR001" (4) is selected as an example.)

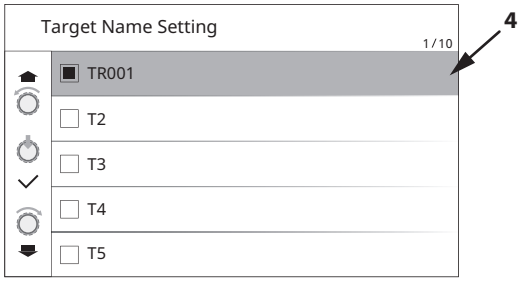

MNUD-01-255-1 en_GB

5. The Target Name Setting screen is displayed.
6. Rotating selector knob (1) counterclockwise scrolls the highlighted item from the 1st digit (5) of the name through to the 5th digit (6), Set button (7), and Clear All button (8), then returns to the 1st digit (5).
   Rotating selector knob (1) clockwise scrolls the highlighted item in reverse order; from the 1st digit (5) of the name, Clear All button (8), Set button (7), the 5th digit (6) through to the 1st digit (5).

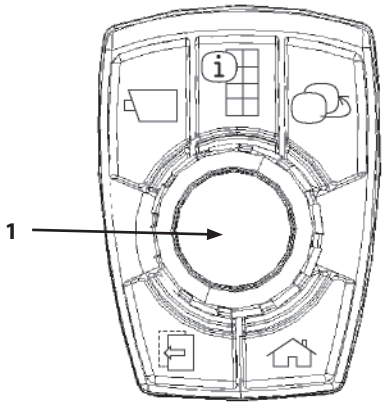

MNUD-01-252-11 ja

7. Highlight a desired character and push selector knob (1). ("1" is selected as an example.)
8. The 5-digit vertical character bar (9) appears. Rotating selector knob (1) scrolls through the characters.
   Clockwise (bar (9) scrolls up):
   A→B ... Y→Z→0→1 ... 8→9→-→.→/→t→_(space) →A→B ...
   Counterclockwise (bar (9) scrolls down):
   A←B ... Y←Z←0←1 ... 8←9←-←.←/←t←_(space) ←A←B ...

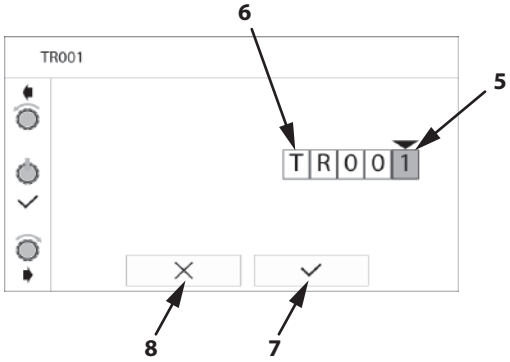

MNUD-01-338-2 ja

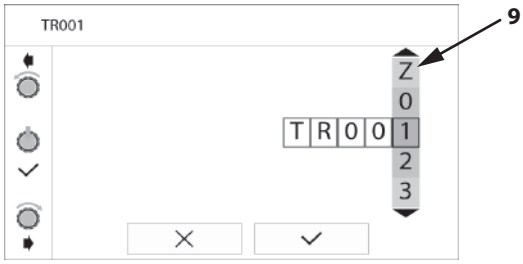

MNUD-01-334-1 ja

9. Stop scrolling when a desired character appears in the active input box of the name line field. ("N" is selected as an example.)

MNUD-01-339 ja

10. Push selector knob (1) to finalize the character selection. (In this example, "TR001" is changed to "TR00N")

MNUD-01-340 ja

11. Rotate selector knob (1) to select Set button (7).

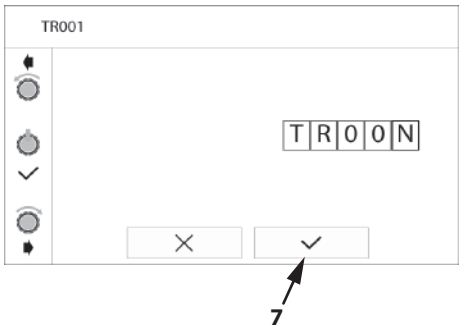

MNUD-01-341-2 ja

12. Push selector knob (1) to finalize the changed name.

NOTE

Selecting Clear All button (8) deletes all 5 digits simultaneously.

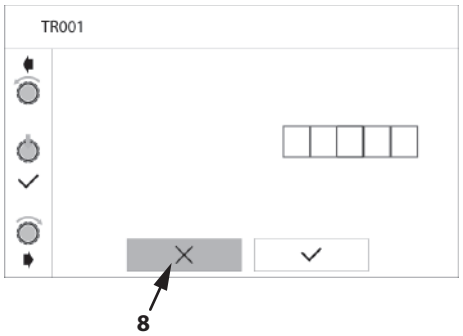

MNUD-01-337-2 ja

Payload Checker

The operator can manage the settings and load data for the payload checker.

1. Press selector knob (1) to display the Main Menu.

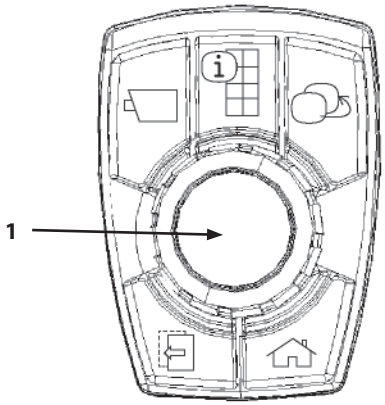

MNUD-01-252-11 ja

2. Rotate selector knob (1) to highlight "Payload Checker" (2), and push selector knob (1).
3. Rotate selector knob (1) to highlight item to check, and push selector knob (1).

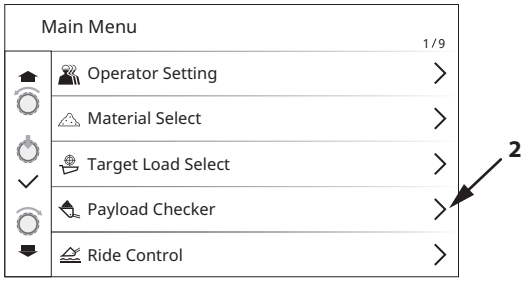

MNUD-01-263-8 en_GB

Payload Checker Function Setting

Switches the payload checker function ON/OFF.

1. Press selector knob (1) to display the Main Menu.

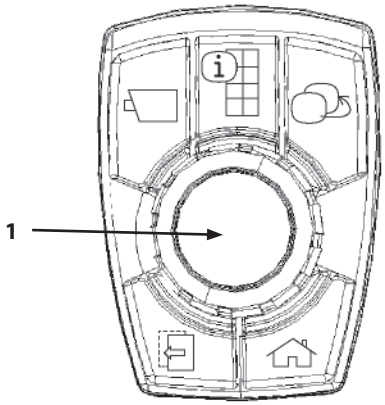

MNUD-01-252-11 ja

2. Rotate selector knob (1) to highlight "Payload Checker" (2), and push selector knob (1).

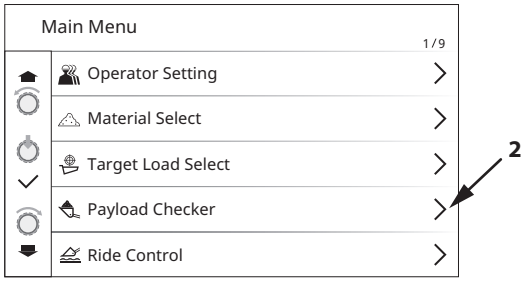

MNUD-01-263-8 en_GB

3. Payload Checker Function Setting screen (3) with its current ON/OFF switch status will appear.
   When the setting is ON, the background color is green and the ○ button is toggled to the right side.

ON position

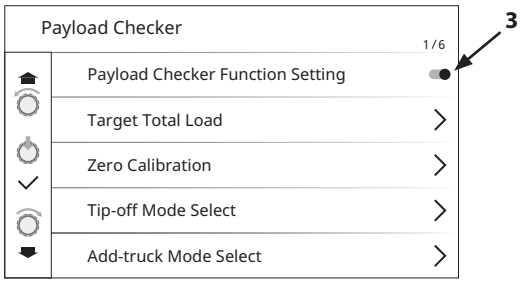

MNUD-01-342-1 en_GB

4. Push selector knob (1) to switch between ON and OFF.
   When this setting is turned ON, the payload checker functions are available.

NOTE

When this setting is turned OFF, the sub monitor display will appear as follows.

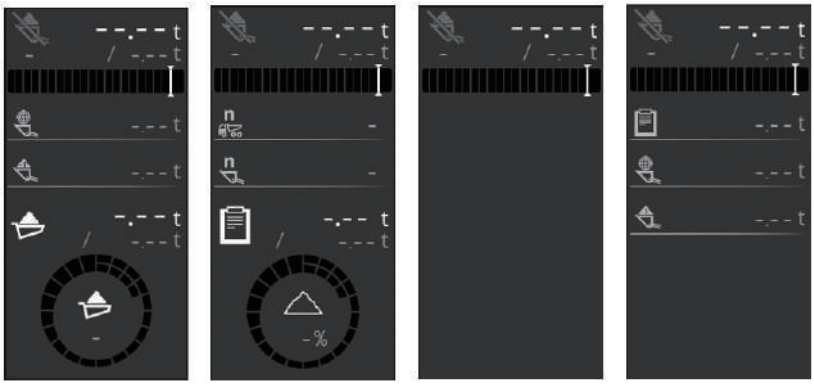

Mode A Mode B Mode C Mode D

MNUD-05-024-1 en_GB

Target Total Load

Sets the target load (total payload) to be measured for the day.

NOTE

The payload data are automatically cleared when the date is changed.

1. Press selector knob (1) to display the Main Menu.

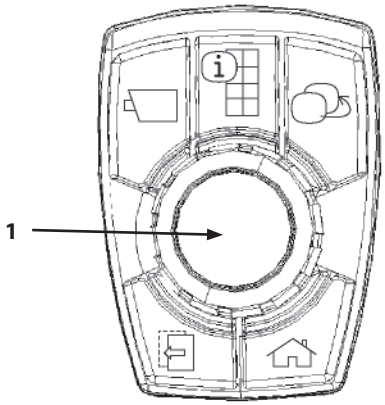

MNUD-01-252-11 ja

2. Rotate selector knob (1) to highlight "Payload Checker" (2), and push selector knob (1).

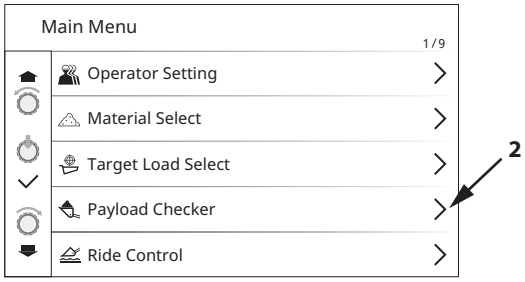

MNUD-01-263-8 en_GB

3. Rotate selector knob (1) to highlight "Target Total Load" (3), and push selector knob (1).
4. The Target Total Load setting screen is displayed.

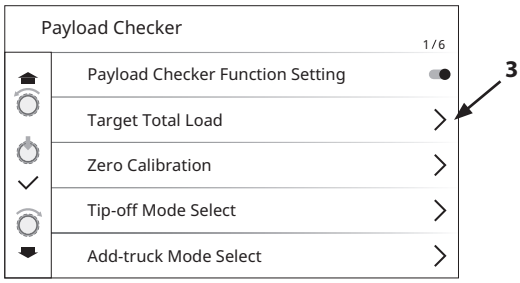

MNUD-01-342-2 en_GB

5. Rotating selector knob (1) counterclockwise scrolls the highlighted item from the 2nd decimal point digit (5) of the value through to the 5th digit (6), Set button (7), and Clear All button (8), then returns to the 2nd decimal point digit (5).
   Rotating selector knob (1) clockwise scrolls the highlighted item in reverse order; from the 2nd decimal point digit (5) of the value, Clear All button (8), Set button (7), the 5th digit (6) through to the 2nd decimal point digit (5).

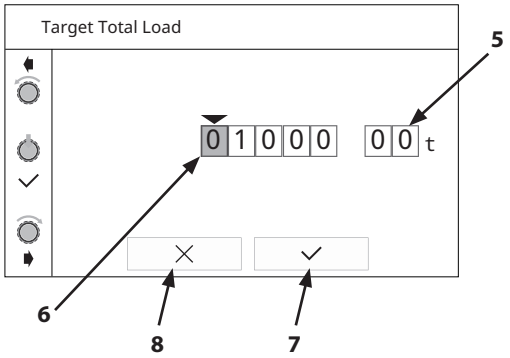

MNUD-05-056-2 en_GB

6. Highlight a desired digit and push selector knob (1). (The 5th digit is selected as an example.)
7. The 5-digit vertical character bar (9) appears. Rotating selector knob (1) scrolls through the characters.
   Clockwise (bar (9) scrolls up):
   0→1→2 ... 8→9→0 ...
   Counterclockwise (bar (9) scrolls down):
   0←1←2 ... 8←9←0 ...

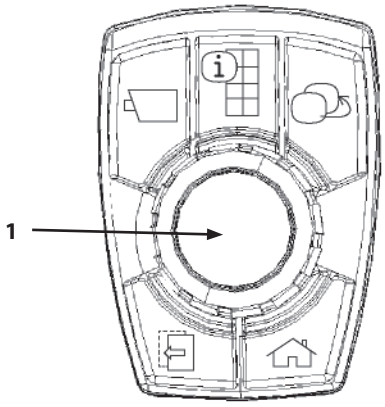

MNUD-01-252-11 ja

8. Stop scrolling when a desired number appears in the active input box of the name line field. ("2" is selected as an example.)

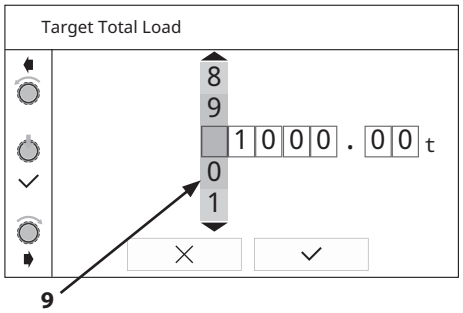

MNUD-05-057-1 en_GB

9. Push selector knob (1) to finalize the character selection. (In this example, "1000.00" is changed to "21000.00")

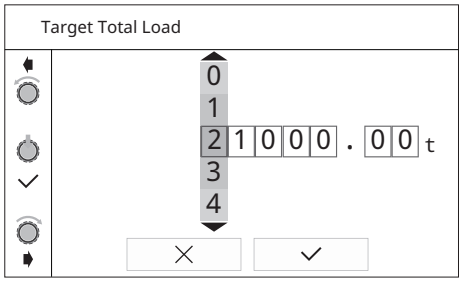

MNUD-05-058 en_GB

10. Rotate selector knob (1) to select Set button (7).
11. Push selector knob (1) to finalize the changed target total load value.

NOTE

Selecting Clear All button (8) turns all digits to "0" simultaneously.

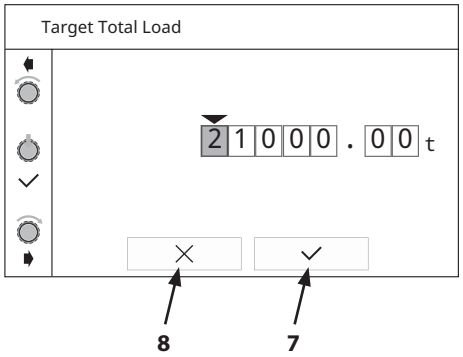

MNUD-05-059-2 en_GB

Zero Calibration

The zero calibration function is for saving the zero weight of the empty bucket (load of 0.00 t).

IMPORTANT

When using this device, the accuracy of the weighed load may drop if the weight of the bucket changes. For that reason, perform zero calibration periodically to keep the weighed load of the empty bucket at zero (0.00).

1. Check that bucket payload (1) is displayed as a bar (--.--t).

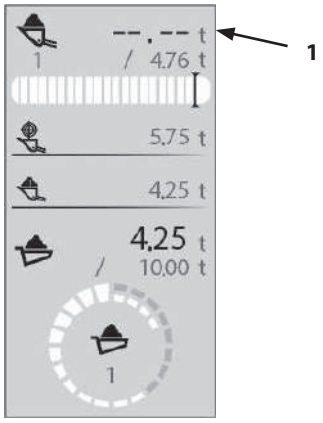

MNUD-01-321-1 ja

2. Press selector knob (2) to display the Main Menu.

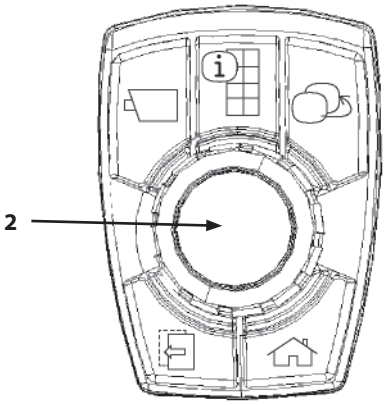

MNUD-01-252-12 ja

3. Rotate selector knob (2) to highlight "Payload Checker" (3), and push selector knob (2).

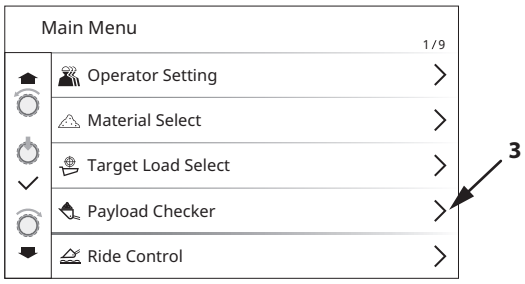

MNUD-01-263-9 en_GB

4. Rotate selector knob (2) to highlight "Zero Calibration" (4), and push selector knob (2). The Zero Calibration screen is displayed.

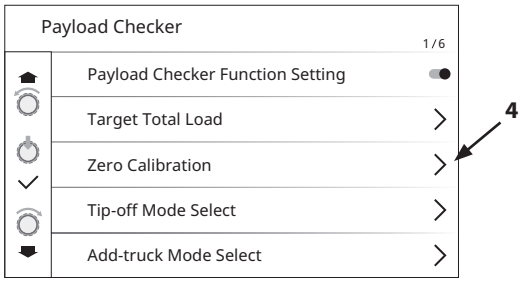

MNUD-01-342-3 en_GB

5. Stop the machine on hard level ground. Make sure the hydraulic oil temperature is 30°C or higher. Fully tilt the bucket up while the bucket is empty.
6. Raise the lift arm at a slow, steady speed while making sure the engine RPM is stable.
7. The weighed zero calibration is displayed on the monitor.
   - If the calibrated load does not exceed the allowable amount:
     Start button (5) is displayed.
     Push selector knob (2) to save the zero calibration.
     When "Completed" flashes on the monitor, turn OFF the key switch.
   - If the calibrated load exceeds the allowable amount:
     The Error button on the monitor flashes. Press the Set button to terminate the calibrated load. The displayed calibrated load is not saved to the machine controller.

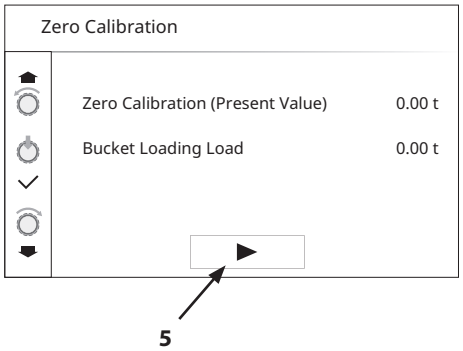

MNUD-01-343-1 en_GB

Tip-off Mode Select

Selects the mode of the tip-off function.

1. Press selector knob (1) to display the Main Menu.

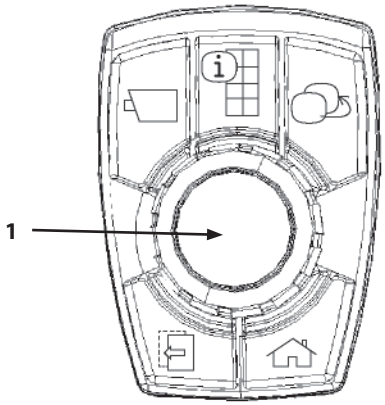

MNUD-01-252-11 ja

2. Rotate selector knob (1) to highlight Payload Checker (2), and push selector knob (1).

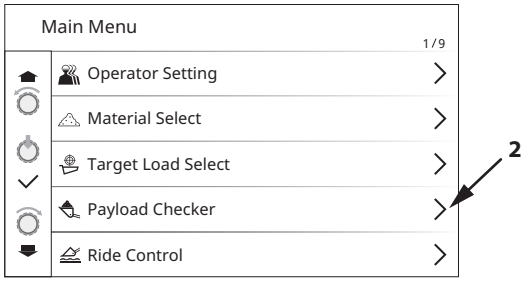

MNUD-01-263-8 en_GB

3. Rotate selector knob (1) to highlight Tip-off Mode Select (3), and push selector knob (1).

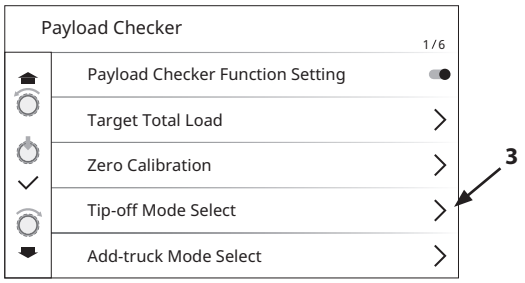

MNUD-01-342-4 en_GB

4. The Tip-off Mode Select screen is displayed with the following mode selections.
   - Tip-off (Truck)
   - Tip-off (Pile)
   - Tip-off Disabled

   For each mode, refer to section (5-74) “Tip-off Mode”.
5. Rotate selector knob (1) to highlight the mode, and push selector knob (1).
6. Returns to the Home screen. Make sure tip-off mode icon (4) at the top of the screen corresponds to the selected mode.

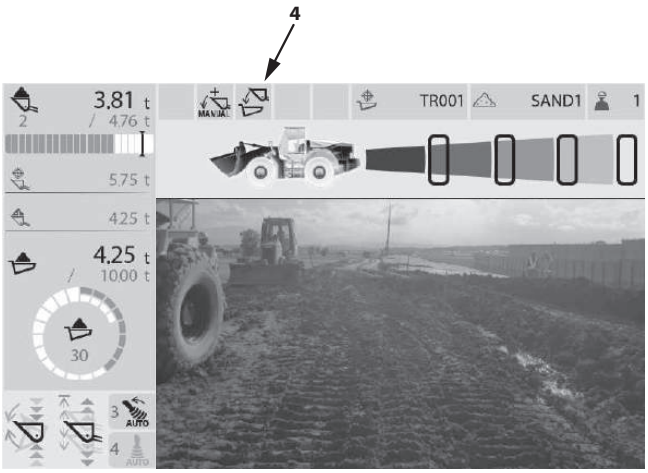

MNTL-01-233-16 ja

IMPORTANT

- **When tip-off (truck) or tip-off (pile) is selected, the lift arm and bucket operation are partially limited.**
- **The tip-off function is effective until the remaining load reaches about 1 ton. If the remaining load goes below 1 ton, the accuracy of might be decreased.**

Add-truck Mode Select

Selects the Add-truck mode for truck loading.

1. Press selector knob (1) to display the Main Menu.

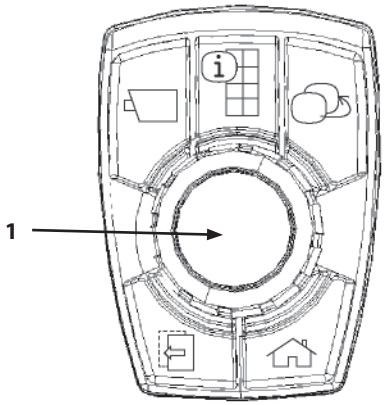

MNUD-01-252-11 ja

2. Rotate selector knob (1) to highlight Payload Checker (2), and push selector knob (1).

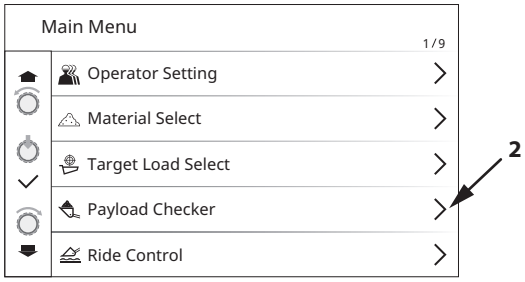

MNUD-01-263-8 en_GB

3. Rotate selector knob (1) to highlight Add-truck Mode Select (3), and push selector knob (1).

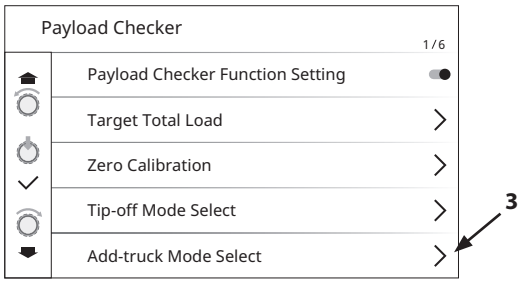

MNUD-01-342-5 en_GB

4. The Add-truck Mode Select screen is displayed with the following mode selections.
   - Auto-Add
   - Manual-Add

   For each mode, refer to section (5-79) “Add Mode”.
5. Rotate selector knob (1) to highlight the mode, and push selector knob (1).

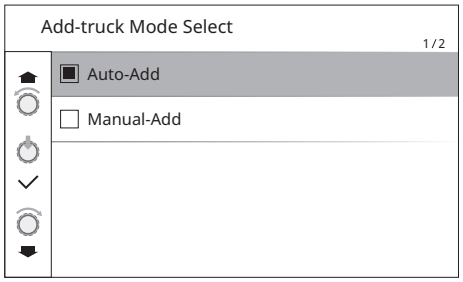

MNUD-01-345 en_GB

6. Returns to the Home screen. Make sure add mode icon (4) at the top of the screen corresponds to the selected mode.

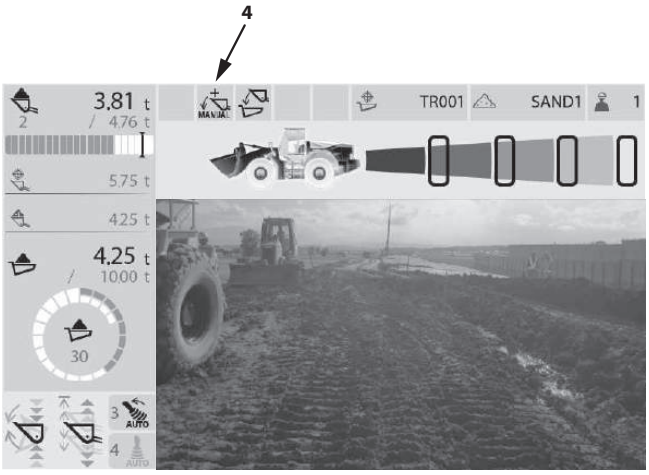

MNTL-01-233-17 ja

Statistical Data

The load data for the day can be displayed in 5 different categories.

1. Press selector knob (1) to display the Main Menu.

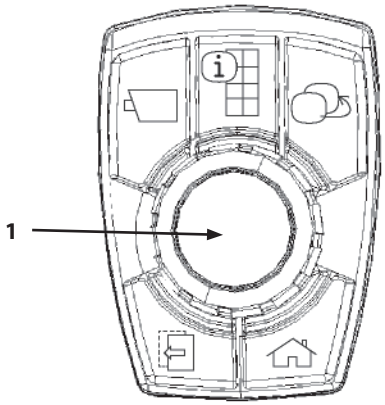

MNUD-01-252-11 ja

2. Rotate selector knob (1) to highlight "Payload Checker" (2), and push selector knob (1).

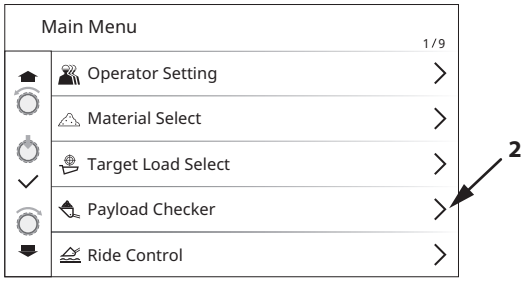

MNUD-01-263-8 en_GB

3. Rotate selector knob (1) to highlight "Statistical Data" (3), and push selector knob (1).
4. The following statistical data options appear on the Statistical Data screen.
   - Statistical Data By Truck
   - Statistical Data By Load Material
   - Statistical Data By Operator
   - Statistical Data By Target Load
   - Statistical Data By Loading Order

   For the details of each display, refer to the following sections.

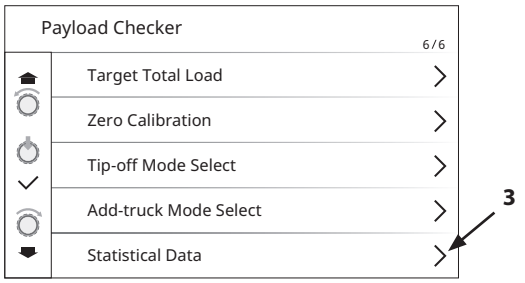

MNUD-01-346-1 en_GB

Statistical Data by Truck

Displays the statistical data on loads by truck number in a list.

NOTE

The truck number is the number of the truck that was tallied in the order that it was confirmed, with the 1st truck as No.1.

1. From the Statistical Data select screen, select Statistical Data by Truck and push selector knob (1).

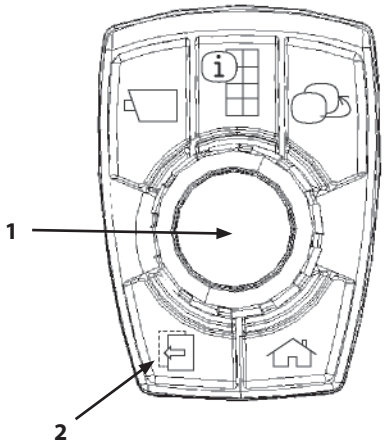

MNUD-01-252-1 ja

2. A list of payloads by truck number (3) is displayed. Load data for up to 999 trucks can be saved per day.

NOTE

When load data due is 0 due to a communication error, "No Data" is displayed.

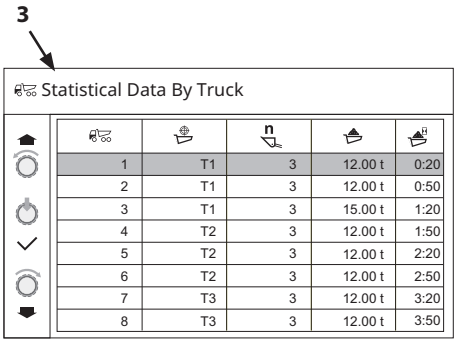

1	T1	3	12.00 t	0:20
2	T1	3	12.00 t	0:50
3	T1	3	15.00 t	1:20
4	T2	3	12.00 t	1:50
5	T2	3	12.00 t	2:20
6	T2	3	12.00 t	2:50
7	T3	3	12.00 t	3:20
8	T3	3	12.00 t	3:50

MNUD-05-101-1 en_GB

Icon	Item	Description	Display Range
	Truck No.	Sequential No. of truck	1-999
	Target Load Name	Target load name when finished loading	
	Cycle Time	The number of times a load is dumped into a truck	1-9999
	Payload	Total truck payload when finished loading	0.00-99999.99 (t)
	Load Time	Time when finished loading	00:00-23:59, - - : - -

3. Rotate selector knob (1) to highlight a truck No. to get comprehensive truck number data, and push selector knob (1).
4. Comprehensive data by loading No. for the selected truck number screen (4) is displayed.

Icon	Item	Description	Display Range
	Cycle Time	The number of times a load is dumped into a truck	1-9999
	Payload	Total bucket payload when finished loading	0.00-99999.99 (t)
	Load Time	Time when finished loading	00:00-23:59, - - : - -

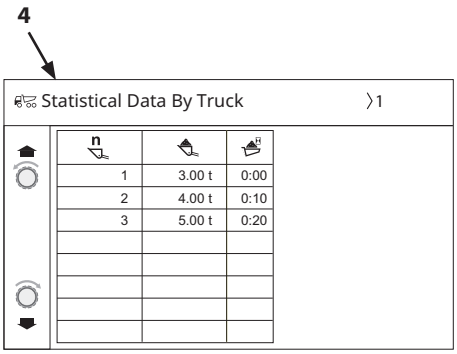

MNUD-05-102-1 en_GB

5. Push backward switch (2) to go back to the Statistical Data By Truck screen.

Select Function (Jump)

When there are hundreds of data, jump searching the list in 100 data increments is possible.

1. When the truck No. 1 is highlighted on Statistical Data By Truck screen (3), rotate selector knob (1) counterclockwise one click. Statistical Data By Truck <Select> (5) is displayed.

3

Statistical Data By Truck

1	T1	3	12.00 t	0:20
2	T1	3	12.00 t	0:50
3	T1	3	15.00 t	1:20
4	T2	3	12.00 t	1:50
5	T2	3	12.00 t	2:20
6	T2	3	12.00 t	2:50
7	T3	3	12.00 t	3:20
8	T3	3	12.00 t	3:50

MNUD-05-101-1 en_GB

2. Select a desired truck number and push selector knob (1) to display the list that shows the selected truck number.
   For example, select "200-" to move the cursor directly to truck No. 200 as shown on screen (6).

5

Statistical Data By Truck <Select>

Last	23:55
100-	5:00
200-	8:20
300-	11:40
400-	15:00
500-	18:20
600-	21:40
700-	23:50

MNUD-05-103-1 en_GB

NOTE

- *Selecting "Last" will jump to the screen where the latest truck No. is shown.*
- *When the truck No. 193 shown on screen (6) is highlighted, and rotating selector knob (1) counterclockwise by one click scrolls the screen to the line for No.192, the jump function is unavailable. (screen (5) does not appear)*

3. Push backward switch (2) to go back to the Statistical Data By Truck screen.

6

Statistical Data By Truck

193	T1	3	12.00 t	7:10
194	T1	3	12.00 t	7:20
195	T1	3	19.00 t	7:30
196	T2	3	12.00 t	7:40
197	T2	3	12.00 t	7:50
198	T2	3	15.00 t	8:00
199	T3	3	12.00 t	8:10
200	T3	3	12.00 t	8:20

MNUD-05-104-1 en_GB

Statistical Data by Material

Displays a list of load data by material.

1. From the Statistical Data select screen, select Statistical Data by Material and push selector knob (1).

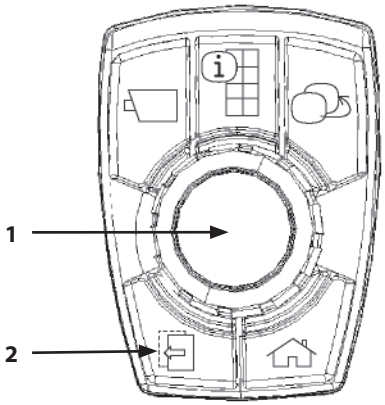

MNUD-01-252-16 ja

2. A list of payloads by material (3) is displayed.

NOTE

When load data due is 0 due to a communication error, "No Data" is displayed.

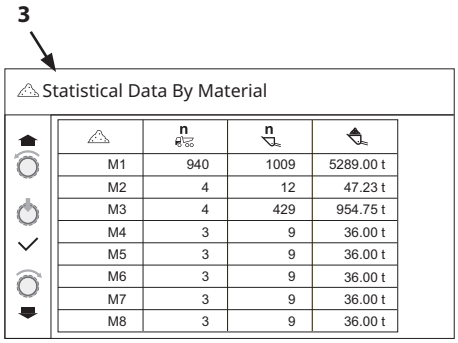

	n	n	
M1	940	1009	5289.00 t
M2	4	12	47.23 t
M3	4	429	954.75 t
M4	3	9	36.00 t
M5	3	9	36.00 t
M6	3	9	36.00 t
M7	3	9	36.00 t
M8	3	9	36.00 t

MNUD-05-105-1 en_GB

Icon	Item	Description	Range
	Load Material ID	Registered load material name	
n	Trucks Count	Total number of dump trucks confirmed by target load material	1-999
n	Cycle Time	Total number of added loads of the target load material	1-9999
	Payload	Total added bucket payloads of the target load material	0.00-99999.99 (t)

3. Rotate selector knob (1) to highlight a load material ID to get comprehensive material data, and push selector knob (1).

4. Comprehensive data by loads count for the selected load material screen (4) is displayed.

Icon	Item	Description	Range
	Truck No.	Sequential No. of truck	1-999
	Target Load Name	Target load name when finished loading	
	Payload	Total bucket payload when finished loading	0.00-99999.99 (t)
	Load Time	Time when finished loading	00:00-23:59, - - : - -

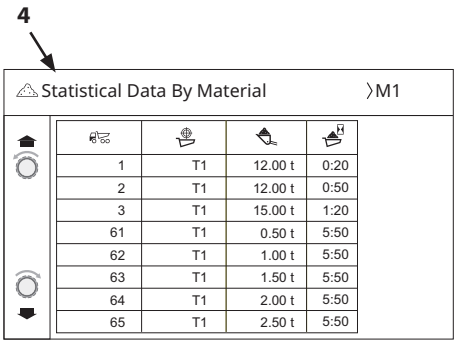

MNUD-05-106-1 en_GB

5. Push backward switch (2) to go back to the Statistical Data By Material screen.

Statistical Data by Operator

Displays a list of load data by operator.

1. From the Statistical Data select screen, select Statistical Data by Operator and push selector knob (1).

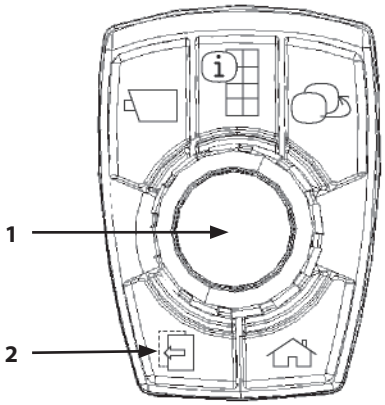

MNUD-01-252-16 ja

2. A list of payloads by operator (3) is displayed.

NOTE

When load data due is 0 due to a communication error, "No Data" is displayed.

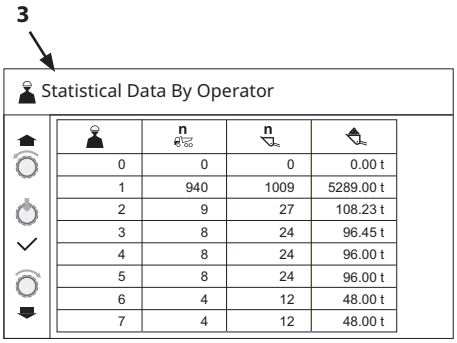

	n	n	
0	0	0	0.00 t
1	940	1009	5289.00 t
2	9	27	108.23 t
3	8	24	96.45 t
4	8	24	96.00 t
5	8	24	96.00 t
6	4	12	48.00 t
7	4	12	48.00 t

MNUD-05-107-1 en_GB

Icon	Item	Description	Range
	Operator No.	Selected operator No.	0-10
	Trucks Count	Total number of dump trucks confirmed by target operator	1-999
	Cycle Time	Total number of loads added by the target operator	1-9999
	Payload	Total bucket payloads added by the target operator	0.00-99999.99 (t)

3. Rotate selector knob (1) to highlight an operator No. to get detailed operator number data, and push selector knob (1).
4. Comprehensive data by loads count for the selected operator screen (4) is displayed.

Icon	Item	Description	Range
	Truck No.	Sequential No. of truck	1-999
	Target Load Name	Target load name when finished loading	
	Payload	Total bucket payload when finished loading	0.00-99999.99 (t)
	Load Time	Time when finished loading	00:00-23:59, - - : - -

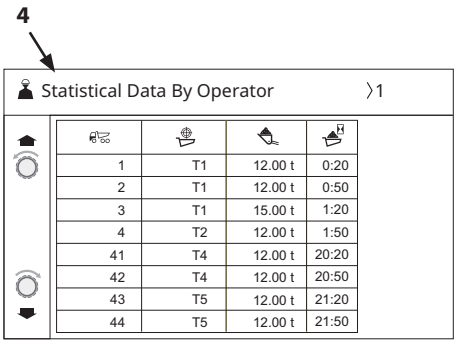

MNUD-05-108-1 en_GB

5. Push backward switch (2) to go back to the Statistical Data By Operator screen.

Statistical Data by Target

Displays a list of load data by target load.

1. From the Statistical Data select screen, select Statistical Data by Target and push selector knob (1).

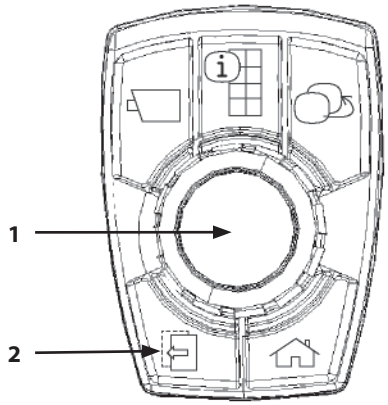

MNUD-01-252-16 ja

2. A list of payloads by target load (3) is displayed.

NOTE

When load data due is 0 due to a communication error, "No Data" is displayed.

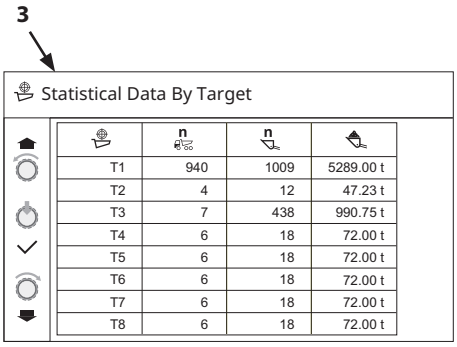

	n	n	
T1	940	1009	5289.00 t
T2	4	12	47.23 t
T3	7	438	990.75 t
T4	6	18	72.00 t
T5	6	18	72.00 t
T6	6	18	72.00 t
T7	6	18	72.00 t
T8	6	18	72.00 t

MNUD-05-109-1 en_GB

Icon	Item	Description	Range
	Target Load Name	Registered target load name	
n	Trucks Count	Total number of dump trucks confirmed by target load	1-999
n	Cycle Time	Total number of added loads of the target load	1-9999
	Load	Total added bucket payloads of the target load	0.00-99999.99 (t)

3. Rotate selector knob (1) to highlight the target load to get comprehensive target load data, and push selector knob (1).
4. Comprehensive data by loads count for the selected target load screen (4) is displayed.

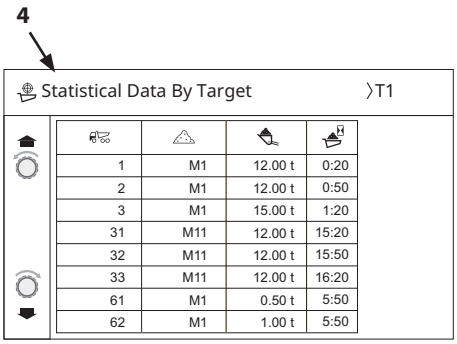

MNUD-05-110-1 en_GB

Icon	Item	Description	Range
	Truck No.	Sequential No. of truck	1-999
	Load Material ID	Load material name when finished loading	
	Payload	Total bucket payload when finished loading	0.00-99999.99 (t)
	Load Time	Time when finished loading	00:00-23:59, - - : - -

5. Push backward switch (2) to go back to the Statistical Data By Operator screen.

Statistical Data by Loading Order

Displays a list of load data by loading order.

1. From the Statistical Data select screen, select Statistical Data by Loading Order and push selector knob (1).

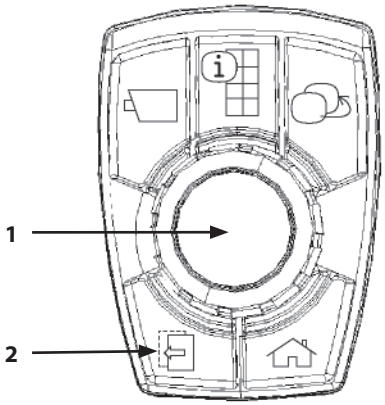

MNUD-01-252-16 ja

2. A list of payloads by loading order (3) is displayed.

NOTE

When load data due is 0 due to a communication error, "No Data" is displayed.

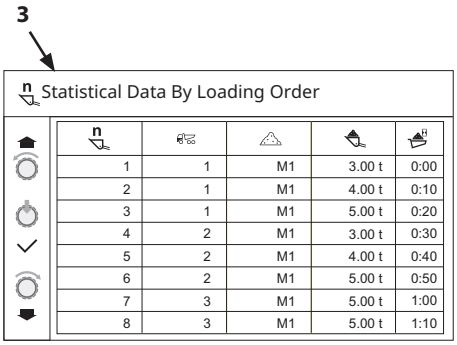

n				
1	1	M1	3.00 t	0:00
2	1	M1	4.00 t	0:10
3	1	M1	5.00 t	0:20
4	2	M1	3.00 t	0:30
5	2	M1	4.00 t	0:40
6	2	M1	5.00 t	0:50
7	3	M1	5.00 t	1:00
8	3	M1	5.00 t	1:10

MNUD-05-111-1 en_GB

Icon	Item	Description	Range
	Loading No.	Sequential No. of stored date in chronological order	1-2600
	Truck No.	Sequential No. of truck	1-999
	Load Material ID	Load material name when finished loading	
	Payload	Total bucket payload when finished loading	0.00-99999.99 (t)
	Load Time	Time when finished loading	00:00-23:59, - - : - -

3. Push backward switch (2) to go back to the Statistical Data By Loading Order screen.

Select Function (Jump)

When there are hundreds of data, jump searching the list in 100 data increments is possible.

1. When the loading No. 1 is highlighted on Statistical Data By Loading Order screen (3), rotate selector knob (1) counterclockwise one click. Statistical Data By Loading Order <Select> (4) is displayed.
2. For details on the procedures of Select Function (Jump), refer to section(5-65) “Select Function (Jump)”.

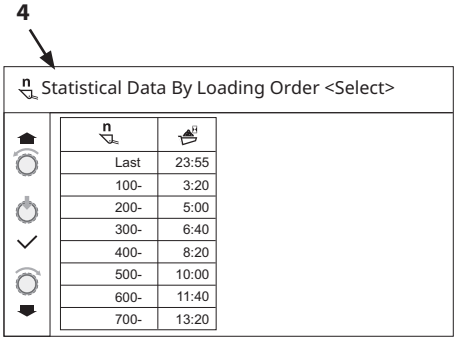

MNUD-05-112-1 en_GB

Payload Checker Function Mode

Tip-off Mode

The tip-off mode is a function for adjusting the displayed bucket payload. The function is mainly used during final loading of a dump truck to help achieve the target load.

IMPORTANT

There are 2 tip-off mode types, and they are selected based on the application. The behavior of the cumulative dump truck load during tip-off changes depending on the mode.

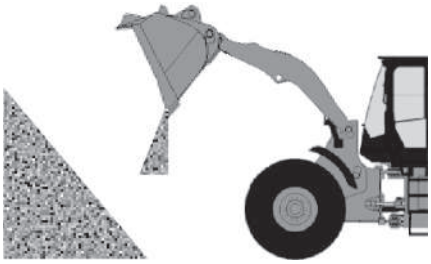

"Tip-off To Pile" Mode

MNUD-05-032 ja

"Tip-off To Pile" Mode:
A mode for gradually returning the bucket load to the pile.

"Tip-off To Truck" Mode:
A mode for gradually loading the bucket load on the truck.

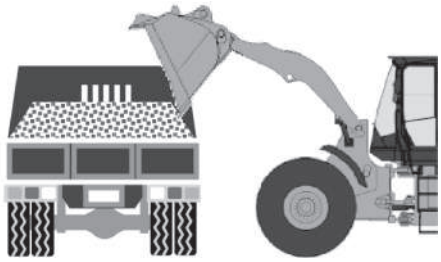

"Tip-off To Truck" Mode

MNUD-05-033 ja

NOTE

Which mode is selected can be checked via the tip-off mode icon at the top of the Home screen. The modes can be switched on the "Tip-off Mode Select" screen in the Main Menu.

IMPORTANT

- **When the tip-off mode is selected, the truck add mode switches to manual mode. If the tip-off mode switch is pressed during the auto-add mode, it switches to manual-add mode for that loading operation only.**
- **A bucket payload weighed in the tip-off mode may be less accurate than a bucket payload obtained with normal weighing, and may fall just under nominal accuracy. Therefore, when loading the truck, use the tip-off mode for adjustments at final loading. Measuring with the bucket at maximum tilt (full tilt) when in tip-off provides relatively stable accuracy.**
- **When tip-off mode is selected, the stroke end soft stop function for lift arm raising and the bucket tilt operation will forcibly enable.**
- **When the bucket is in the dump position, the tip-off display is reset. If the load is highly viscous soil or mud, adjusting the load with the tip-off mode may be difficult.**

Tip-off (Pile) Procedure

1. Confirm the bucket payload using normal digging operations.

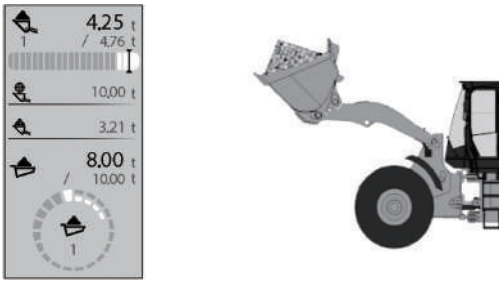

MNUD-05-027 ja

2. Push tip-off mode switch (1).

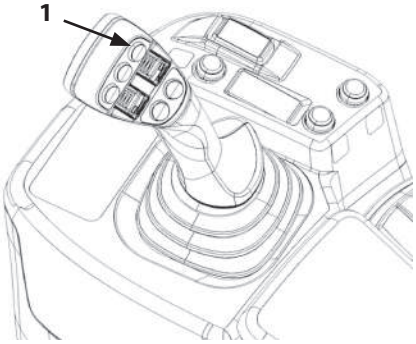

MNUD-05-004-8 ja

3. Tip-off mode icon (2) flashes at the top of the Home screen.
   Bucket payload value (3) becomes undefined (shown in gray).
   Cumulative dump truck load (4) becomes undefined (shown in gray), and the load value with the bucket payload added is displayed.

   IMPORTANT

   The cumulative dump truck load added here is a reference value for adjusting the weight of the bucket payload. It is not actually added to truck. To add to a truck, Add Load switch (5) must be pressed later on in step 6.

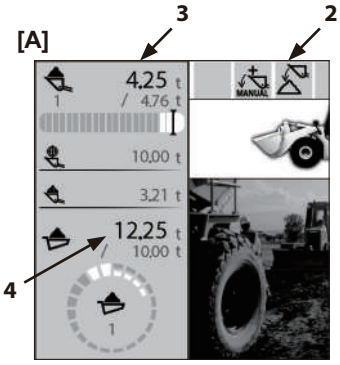

MNUD-05-048-1 ja

4. Dump the load into the bucket by releasing it a little at a time. The values of the bucket payload and cumulative dump truck load change with the amount of the load dumped.

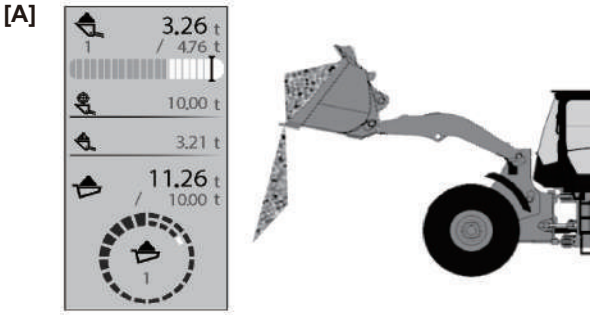

MNUD-05-049-1 ja

5. When the target load is reached, fully tilt the bucket up and move the machine to the truck.
6. Raise the lift arm to the top of the dump body wall of the truck and press Add Load switch (5).
7. The bucket payload display is shown as a bar (--. --) and the cumulative dump truck load is displayed in white. The tip-off mode icon goes out.

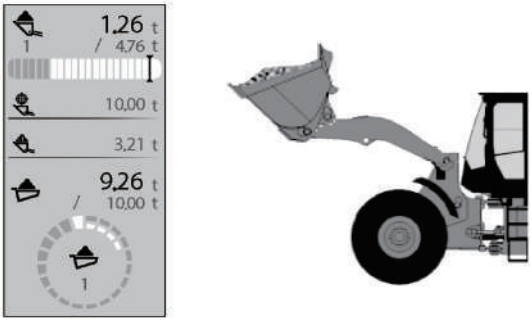

MNUD-05-050 ja

8. Dump the bucket and load the material onto the truck.

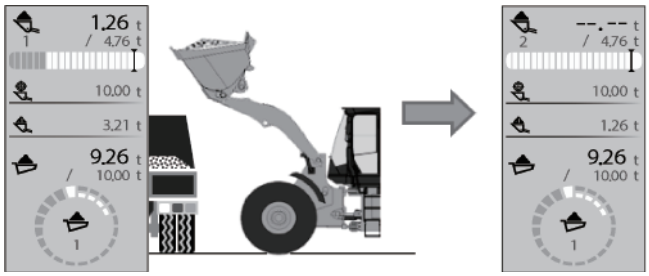

MNUD-05-036 ja

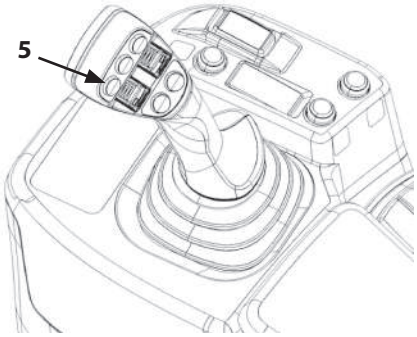

MNUD-05-004-9 ja

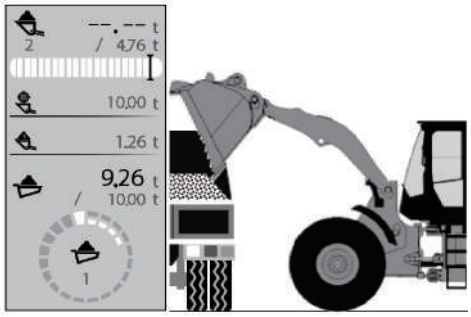

MNUD-05-051 ja

Tip-off (Truck) Procedure

1. Dig up the material and move the machine to the truck.
2. Raise the lift arm to the top of the dump body wall of the truck and confirm the buck payload.

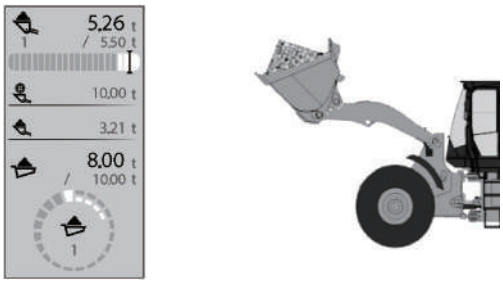

MNUD-05-034 ja

3. Push tip-off mode switch (1).

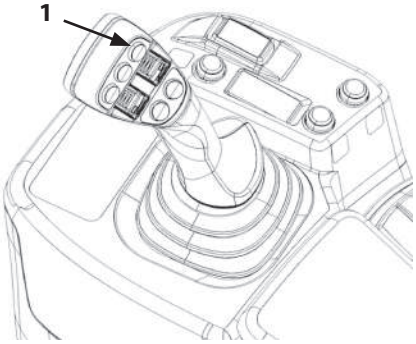

MNUD-05-004-8 ja

4. Tip-off mode icon (2) lights up at the top of the Home screen.
   Bucket payload value (3) and cumulative dump truck load (4) are undefined (shown in gray).

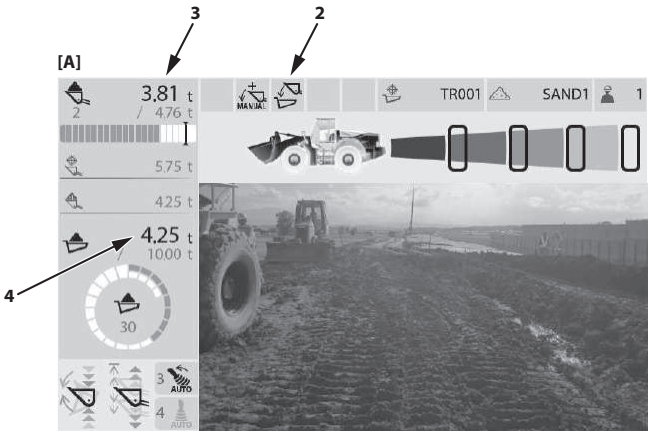

MNTL-01-233-18 ja

5. Dump the load into the bucket by releasing it a little at a time. The values of the bucket payload and cumulative dump truck load change with the amount of the load dumped.
6. The cumulative dump truck load is calculated by adding the amount reduced from the bucket payload (difference between when tip-off mode is ON and when dumping). ([B]→[C]).

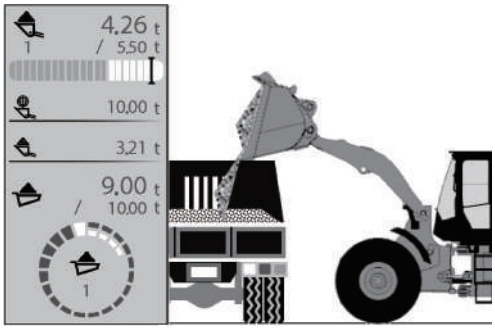

MNUD-05-052 ja

IMPORTANT

The cumulative dump truck load added here is a reference value for adjusting the weight of the bucket payload. It is not actually added to truck. To add to a truck, Add Load switch (5) must be pressed later on in step 7.

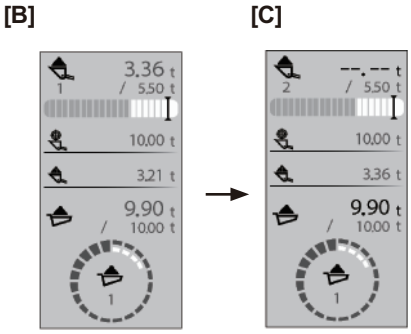

MNUD-05-038-1 ja

7. When the target load is reached, fully tilt the bucket and press the Add Load switch (5). The bucket payload is displayed as a bar (- -.- -). (As shown in screen [C])
8. The cumulative dump truck load becomes a confirmed load (shown in white). The tip-off mode icon goes out.
9. Move the machine to the pile and dump out the material still in the bucket.

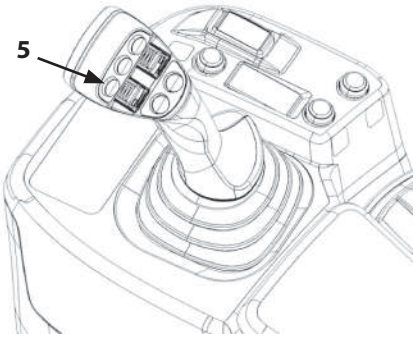

MNUD-05-004-9 ja

Add Mode

The add mode function is for adding the weighed bucket payload to the cumulative dump truck load. Auto-Add mode or Manual-Add mode can be selected based on the application.

NOTE

The currently selected mode can be checked via the add mode icon at the top of the Home screen. The modes can be switched on the "Add Mode Select" screen in the Main Menu.

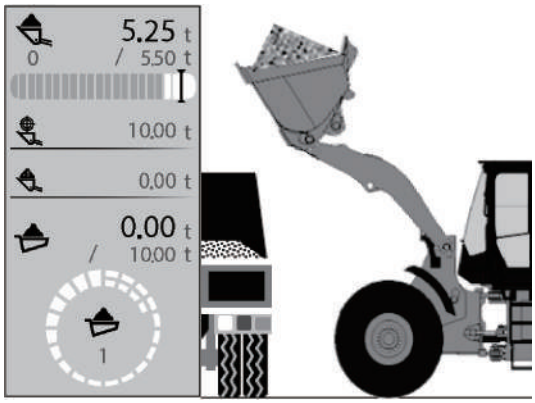

Bucket dumping automatically adds the measured load.

MNUD-05-039-1 en_GB

Auto-Add Mode

After weighing the bucket payload, dumping the bucket fully will automatically add the measured load to the cumulative loaded weight by detecting the bucket dump status.
Pressing the Add switch will reduce labor if used continuously when loading trucks, making work more efficient.

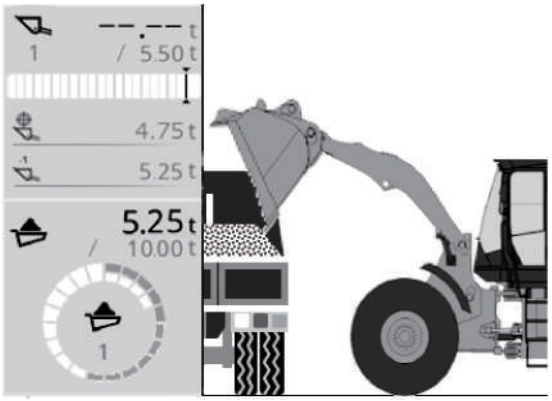

MNUD-05-040 ja

Manual-Add Mode

After weighing the bucket payload, it is added to the cumulative loaded weight by pressing the Add switch on the control lever. When used for simultaneous truck loading and leveling, it allows cumulative adding under some conditions, which enables more accurate load management.

NOTE

Lowering the lift arm without pressing the Add switch cancels the weighed load.

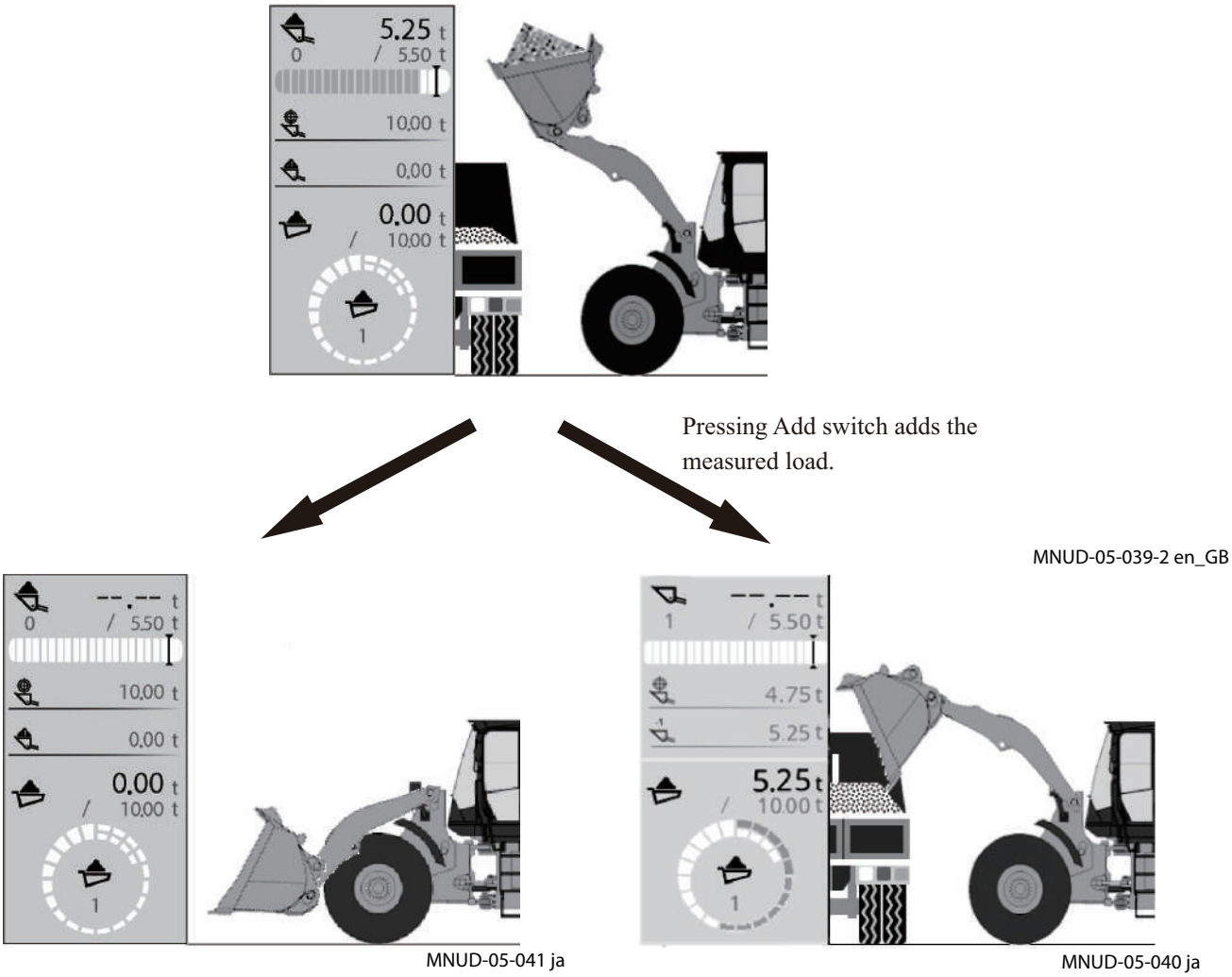

Bucket Overload Warning

CAUTION

Bucket overloads increase the risk of turn overs and affects the service life of the machine. Prevent these issues by using this function.

If bucket payload (1) exceeds rated payload (2), bucket level gauge (3) turns red. If the bucket payload is considerably more than the rated payload capacity, the warning buzzer sounds.

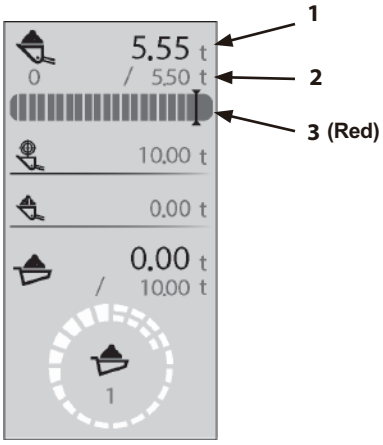

MNUD-05-042-1 en_GB

Dump Truck Overload Warning

IMPORTANT

Overloaded dump trucks may be against the law. Check the local laws and regulations.

The dump truck overload warning function warns the operator that the cumulative truck payload weight is over that of the target load.
The operator can set the target load at will. If the operator sets the target load to the maximum load of the truck, they will avoid breaking the law due to truck overloading.

The warning notifies the operator of overload before and after loading the truck.

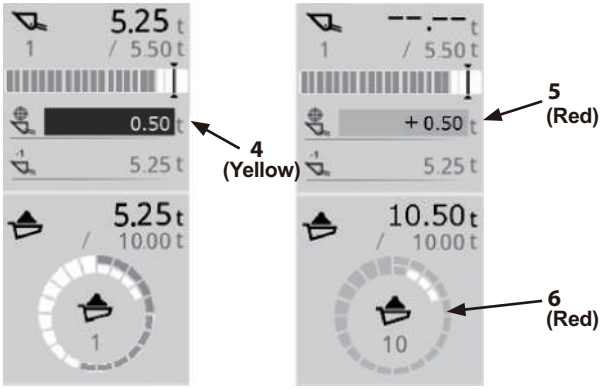

MNUD-05-043-1 en_GB

Before loading truck:
The amount until overload is reached (e.g. 0.50 t) is shown with a yellow background (4). Reduce the amount that was loaded.

After loading truck:
By how much the amount is overloaded (e.g. 0.50 t) is shown with a red background (5). Dump truck level gauge (6) also turns red. Reduce the load weight.

Canceling Payloads

Canceling Bucket Payloads

The bucket payload can be reset by pressing Cancel switch (1) on the right console.

NOTE

Only the last cumulative dump truck load can be canceled. Use this to cancel trucks that are added accidentally.

Pressing Cancel switch (1) while the value of the bucket payload is displayed resets the bucket payload. Use this to reweigh when there is a problem with weighing a load.

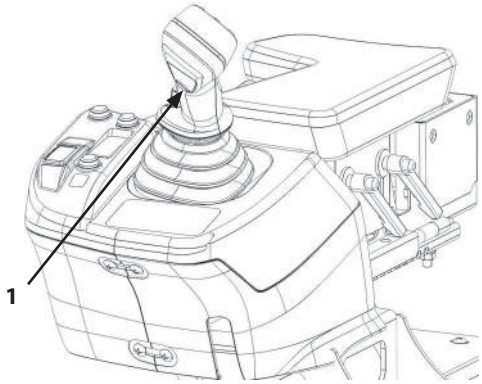

MNUD-01-029-5 ja

Canceling Truck Load

Pressing Cancel button (1) while the values of the bucket payload (2) and the cumulative dump truck load (3) are displayed in white subtracts the last load from the cumulative dump truck load. In addition, “1” is subtracted from loads counted (4) when the cumulative dump truck load decreases.

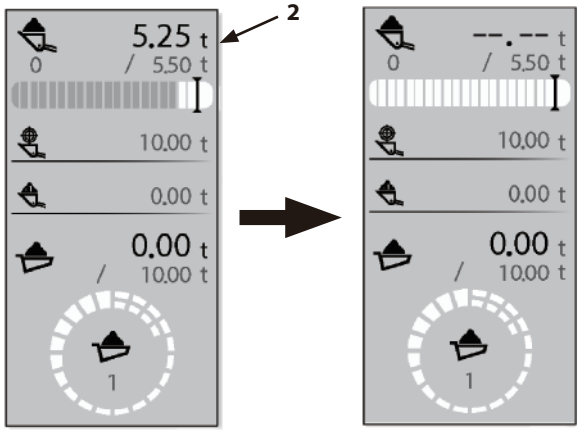

MNUD-05-053-1 ja

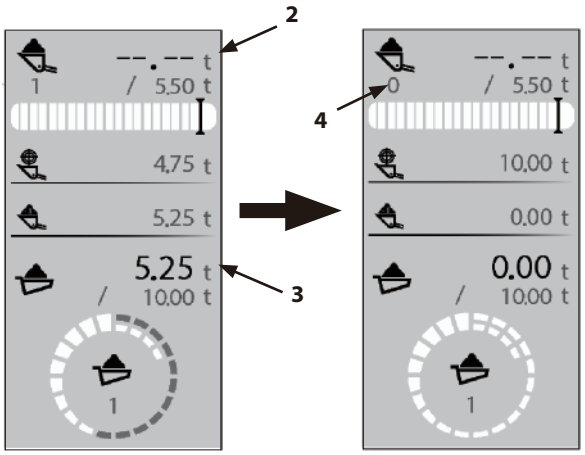

MNUD-05-054-1 ja

Canceling After Truck Clear

Pressing Cancel switch (1) after pressing Truck Clear switch (5), deletes the last dump truck load, and returns to the status prior to starting dump truck load clear.
In addition, “1” is subtracted from the dump truck count (6).

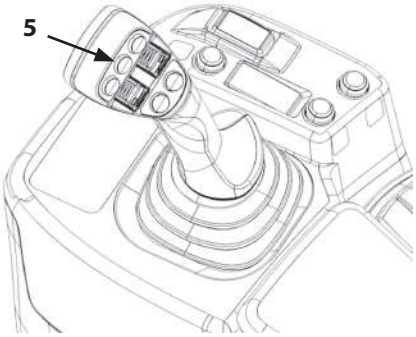

MNUD-05-004-10 ja

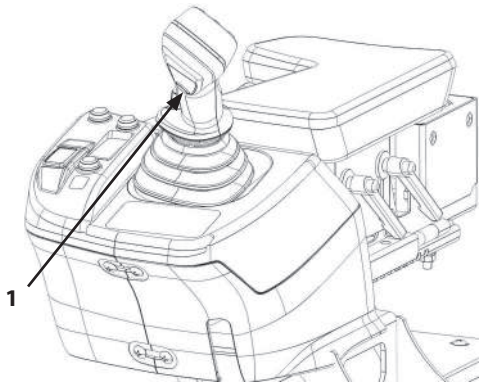

MNUD-01-029-5 ja

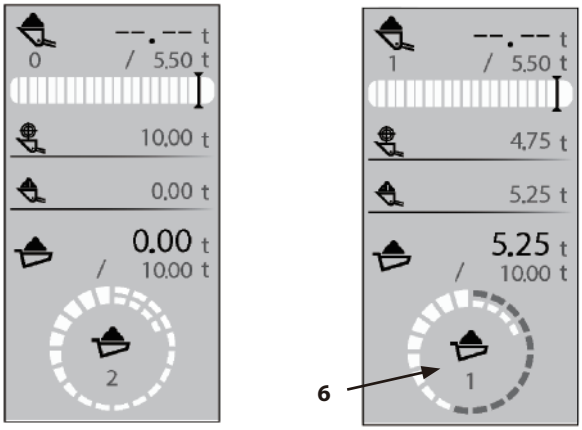

MNUD-05-055-1 ja

Progress

The progress display allows the operator to check the current ratio of total load versus the target total load of the day. The progress display is used to understand the work progress.

Pressing Screen Control switch (5) allows progress to be viewed by selecting the B mode display.

1. Total Load
2. Target Total Load
3. Progress Level Gauge
4. Progress (%)

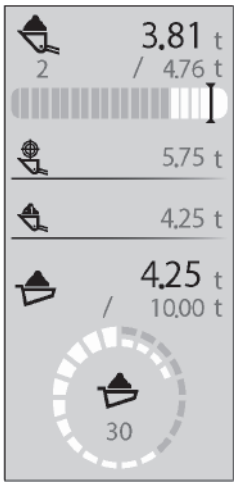

MNUD-05-061 ja

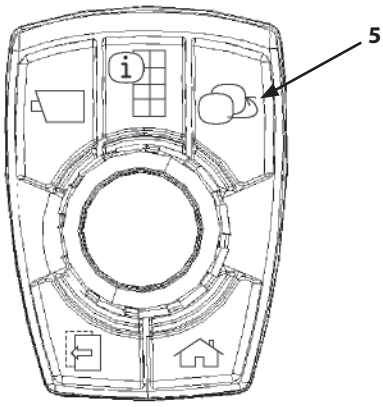

MNUD-01-252-17 ja

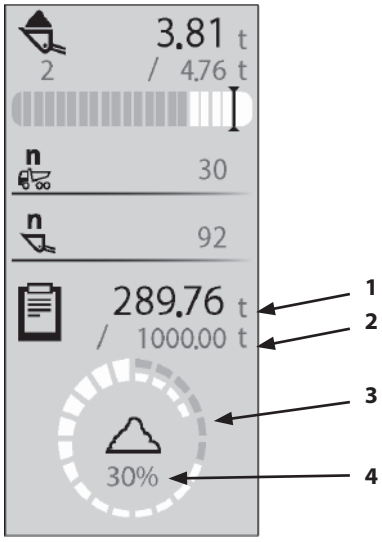

MNUD-05-060-1 ja

TRANSPORTING

Transporting by Road

When transporting the machine on public roads, be sure to first understand and follow all local regulations.

- When transporting the machine using a trailer, check the width, height, length and weight of the trailer with the machine loaded.
- Investigate conditions on the travel route in advance, such as dimensional limits, weight limits, and traffic regulations.

  In some cases it may be necessary to obtain permission from the local authority concerned, or to disassemble the machine to bring it within local regulations for dimensional or weight limits.

Transporting by Trailer

Refer to its weight and dimensions in the “Specifications” when selecting an appropriate trailer. When transporting the machine within the “Specifications” by a trailer, it is possible to transport the machine without disassembling it.

Loading / Unloading on Trailer

WARNING

Use a removable ramp or loading dock for loading and unloading.

Always load and unload the wheel loader on a firm, level surface.

Ramp/Loading Dock

1. Before loading, thoroughly clean the ramps, loading dock and flatbed. Dirty ramps, loading docks, and flatbeds with oil, mud, or ice on them are slippery and dangerous.
2. Place blocks (1) against the truck and trailer wheels while using a ramp or loading dock.

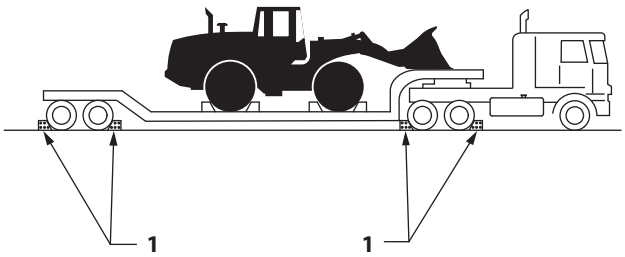

M4GB-06-001-1 ja

3. Ramps must be sufficient in width, length, and strength. Be sure that the incline of the ramp is less than 15°.
4. Loading docks must have the proper width and strength to support the machine and have an incline of less than 15°.

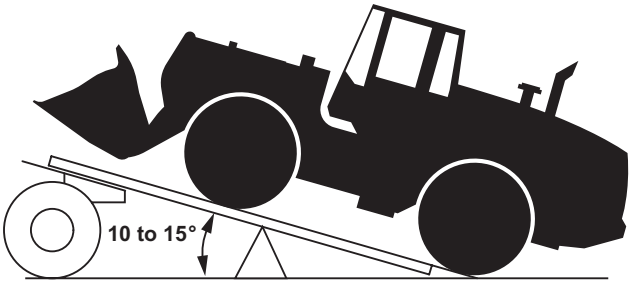

M4GB-06-002-1 en_GB

Loading / Unloading on Trailer

WARNING

- **Never change the steering direction while driving on a ramp, as it is extremely dangerous and may cause the machine to turnover. Never turn the steering wheel when positioned on the ramp. If repositioning is necessary, first move back to the ground, correct the direction of travel, and drive back up.**
- **Select the AUTO 2 position for auto-shifting, or select 2nd gear for manual shifting using the shift switch.**

Loading

1. Load the machine so that the centerline of the machine aligns with the centerline of the trailer flatbed.
2. Drive the machine onto the ramp slowly.
3. Lower the bucket onto the trailer deck.
4. Stop the engine. Remove the key from the key switch.
5. Operate the control lever several times. Relieve pressure in the cylinders.
6. Put the control lever pilot shut-off switch in the LOCK "🔒" position.
7. Close glass windows and operator's station doors, to protect the cab from wind and rain. Place a cover over the exhaust pipe.
8. Install articulation lock bar (1) to prevent the machine from articulating.

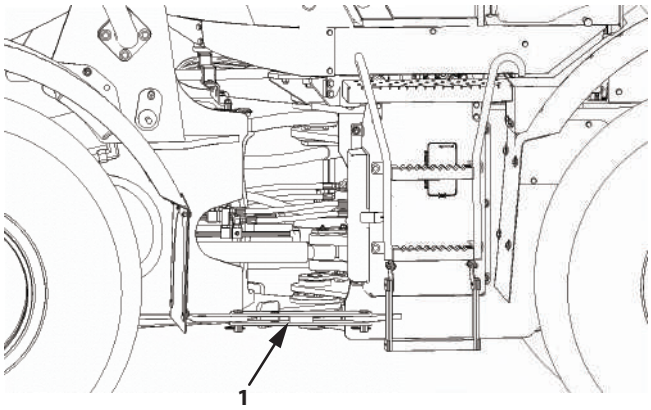

MNTL-06-001-1 ja

Fastening the Machine for Transport

WARNING

- **Fasten the machine frame to the deck securely with wire rope. While traveling, loads may shake, shift back and forth or sway side to side.**
- **Before tying down the machine, inspect the metal tie-down fixtures that are welded to the vehicle for any problems.**
- **If there is a problem with any metal tie-down fixture, contact Authorized Dealer to have it inspected and/or replaced.**

1. Apply the parking brake. Slowly rest the bucket on the trailer deck or bed.
2. Wedge wooden blocks (1) at each of the front and rear tires to hold the machine in position.
3. Securely fasten the main body and the front attachment to the bed properly with wire ropes.
   The machines for export come with lifting lugs. Use these lugs to secure the machine.

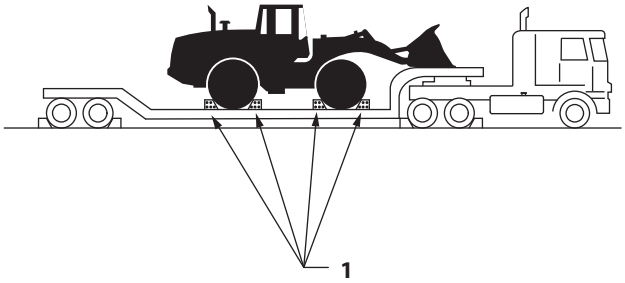

M4GB-06-003-1 ja

Tie-down Wire Angle

Model	Tying-down Attachment Point	Angle of Wire rope For tying-down			Distributed Tying-down Force Restraining Force	Lashing Capacity	Machine Mass For Calculation
		α	βx	βy	F_{front} / F_{rear}	LC = 2 × F	W
ZW140-7 ZW160-7 ZW160PL-7	Front	27°	66°	24°	95 kN	190 kN	14.5 t
	Rear	30°	26°	64°	49 kN	98 kN	

NOTE

The restraining force of the tie-down wire complies with (ISO15818:2017).

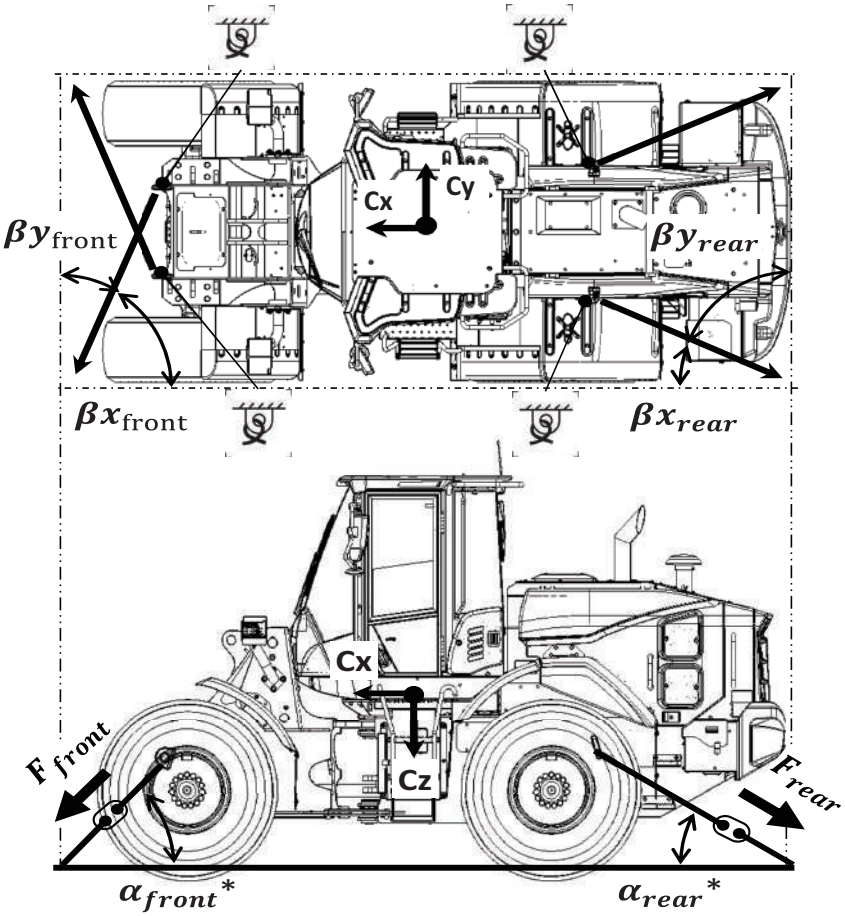

MNFQ-06-002-1 en_GB

F_{front} / F_{rear} : Maximum restraining force applied to each tie-down point

α_{front} / α_{rear} : Angle between the tie-down wire and the bed on which the machine placed
*This variable is not the projected angle relative to the side view.

βx_{front} / βx_{rear} : Angle between the tie-down wire and the front/rear axes of the machine

βy_{front} / βy_{rear} : Angle between the tie-down wire and the left and right axes of the machine

Cx: Acceleration coefficient applied forward and toward rear (road transport Cx=0.8)

Cy: Acceleration coefficient applied sideways (road transport Cy=0.5)

Cz: Vertical acceleration coefficient (road transport Cz=1.0)

Transporting Wheel Loader (Urgent Situation)

The following procedure shall only be applied to cases when the wheel loader has to be urgently moved a short distance. Use a trailer, when it is necessary to transport the wheel loader a long distance.

Precautions for Self-Traveling

Whenever possible, avoid driving the wheel loader long distances at high-speed as doing so may heat the tires dramatically, possibly resulting in premature tire damage. Keep the following points in mind if the wheel loader has to be driven.

- Observe the rules and regulations associated with this wheel loader and drive carefully.
- The recommended tire pressures and traveling speeds depend on the type of tires used and the road conditions. Consult Authorized Dealer or tire dealer.
- Check the tire pressure before traveling when the tires are cold.
- Avoid driving the wheel loader continuously for more than 30 minutes. Stop wheel loader regularly to check the tires and other parts of the machine for any abnormalities, and to check the oil and coolant levels.
- Keep the bucket empty when traveling.
- Do not drive the wheel loader with the tires containing “calcium chloride” or “dry ballast”, which accelerate heating.

Precautions for Towing

WARNING

Never tow the wheel loader if the brake system is in need of repair. Immediately consult Authorized Dealer for repair. Operate the machine after repair is completed.

Do not tow the machine unless absolutely necessary. If the machine has to be towed, observe the following points.

IMPORTANT

Do not tow the wheel loader with the parking brake applied. Towing with the parking brake applied may damage the parking brake. For details, see "Releasing the Parking Brake" (6-9).

- When the engine starts
  Keep the engine running so that the steering and brake systems are operable. Release the parking brake.
- When the engine will not start
  Remove the propeller shaft
  - Since the parking brake cannot be released, manually release the parking brake.
    Next, disconnect the front and rear propeller shafts. At this time, wedge wheel chocks under each tire to prevent the machine from moving.
  - When the engine is stopped, the steering cylinders cannot extend or retract, preventing the machine from steering. Changing the hydraulic hose connection as shown in the figure will allow the steering cylinders to work and the steering of the wheel loader to follow that of the recovery vehicle.

NOTE

Oil will gush out of the hoses when disconnecting them. Be careful not to spill any oil.

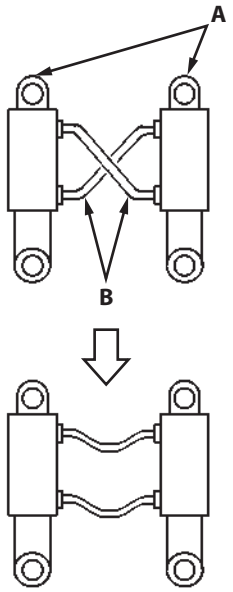

M4GB-06-007-2 ja

A: Steering Cylinder B: Hoses

Hydraulic Circuit Bypass

Loosening shuttle valve (1) allows the machine to be towed in an emergency.

CAUTION

Towing at high speeds will make the equipment hotter, which will adversely affect lubrication and ultimately damage the equipment. Use only at low speeds (3 km/h or less) and for short-distance emergency travel.

NOTE

In an emergency, the parking brake must also be forcibly released prior to towing the machine. For details on how to release the parking brake, refer to section (6-9) "Releasing the Parking Brake".

Step

IMPORTANT

Before starting work, place the machine in the inspection/ maintenance posture as per the procedure in section (7-8) "Pre-inspection/Pre-maintenance Preparation" in the chapter on "Inspection/ Maintenance".

1. Turn key switch OFF to stop the engine.
2. Loosen shuttle valve (1) until it touches stopper (2).
   : 8 mm
3. The bypass function is enabled.
4. If towing of the machine is complete, tighten shuttle valve (7) to its original position.
   : 8 mm
   : 50 N·m (5.0 kgf·m)

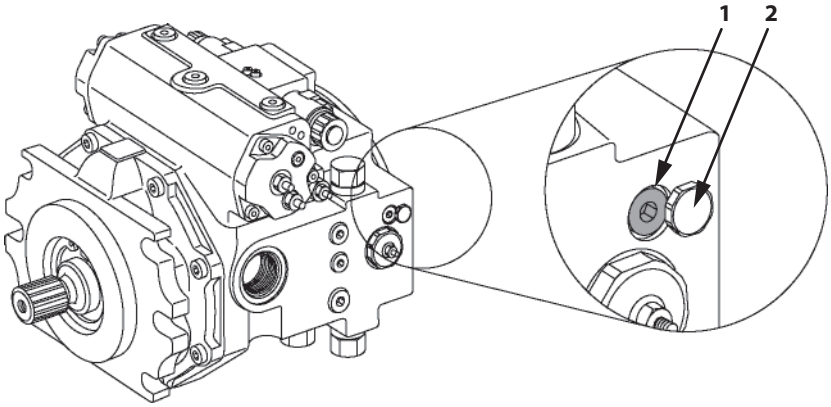

TNDF-03-01-013-1 ja

Releasing the Parking Brake

WARNING

- **Releasing the parking brake is dangerous, as once it is released, the machine cannot be stopped with the brakes. Before releasing the parking brake or connecting the braking system, be sure to secure the tires with wheel chocks so the machine will not move.**
- **Before using the machine again, contact Authorized Dealer for them to make parking brake adjustments.**

CAUTION

- **As soon as towing of the machine is complete, connect the parking brake.**
- **Towing should only be used to get the machine to a place where the it can be inspected and/or serviced. Towing is not meant for long distances. Do not tow the machine over long distances.**

Release of the parking brake is done manually when the parking brake cannot be released by the parking brake switch due to an abnormality or failure in a component of the braking system such as a pump.

Refer to the procedure on the next page to release the parking brake.

1. Remove plug (1) from brake cap (8).
2. Remove nut (3) and use rags to prevent oil from spilling out.
3. Loosen nut (2).
4. Remove connector (4) and attach it to the hole in plug (1). Attach tube (5) to connector (4) and tighten nuts (2) and (3).
5. Remove orifice (9) in the cap.
6. Remove release bolt (6) and flat washer (7).
7. Insert release bolt (6) and flat washer (7) into the hole from where orifice (9) was removed and screw it in.
8. After release bolt (6) touches brake cap (8), the parking brake will be released when the head of the bolt is rotated approximately 2 times (approx. 2 to 3 mm).

Wrench size: 17 mm, 22 mm, 27 mm
8 mm (hex wrench)

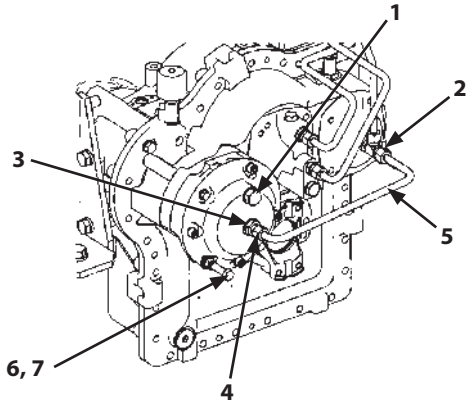

M4FC-06-001-2 ja

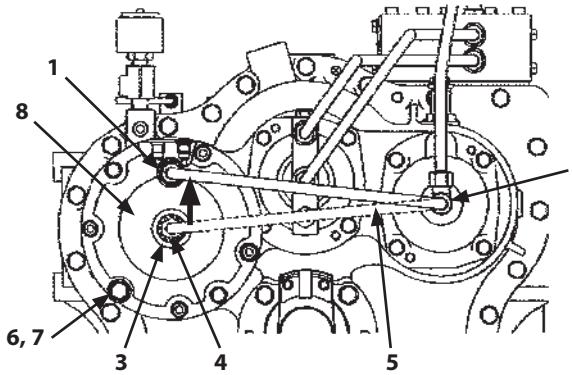

M4FC-06-002-1 ja

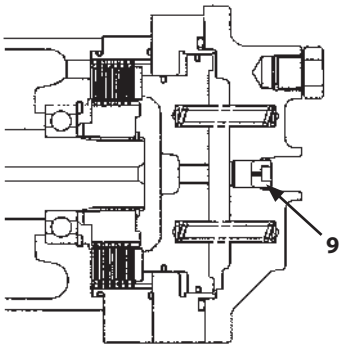

M4FC-06-003-1 ja

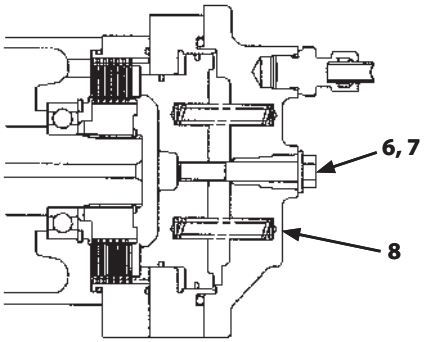

M4FC-06-004-1 ja

Towing Method

CAUTION

- **Use wire rope with a towing strength of at least 150% of the total machine weight.**
- **Towing from the front of the machine**
  When attaching a wire rope, attach it to the front axle.
  To prevent the wire ropes from being damaged, place protective material into corners.
- **Towing from the back of the machine**
  When attaching wire rope, attach it on towing pin (1).
  To prevent the wire rope from coming off, always use the lock pin after completely inserting the wire rope in towing pin (1).

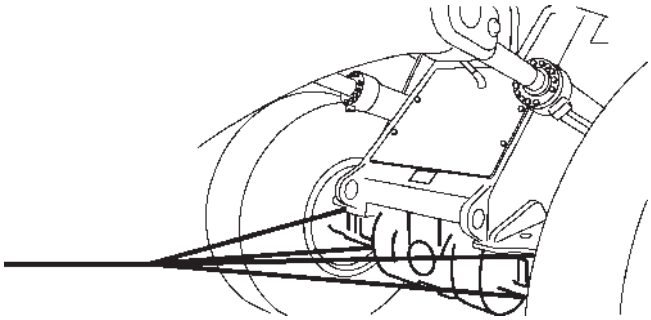

M4GB-06-008 ja

When the wheel loader becomes inescapably struck in muddy ground, attach wire ropes to the wheel loader as shown on the right, and tow it out with another machine.

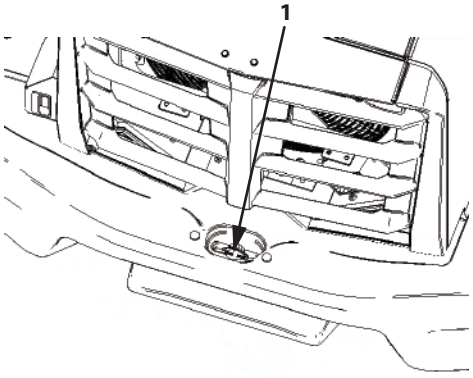

MNTL-06-002-1 ja

Lifting Machine

WARNING

- **Before lifting the machine, inspect the metal lifting lugs that are welded to the vehicle for any problems. If there is a problem with any metal lifting lug, contact Authorized Dealer to have it inspected and/or replaced.**
- **Use lifting cables and other lifting tools that are sufficiently strong and free of damage and/or deterioration.**
- **Contact Authorized Dealer for correct lifting procedures, and the size and types of lifting cable and tools.**
- **Move the control lever lock switch to the LOCK "🔒" position to prevent the machine from moving accidentally while being lifted.**
- **Secure the front and rear frames using the articulation lock bar so that the front and rear frames of the machine do not articulate.**
- **Incorrect lifting procedures and/or incorrect wire rope attachment will cause the machine to shift while being lifted resulting in machine damage and/or personal injury.**
- **Do not lift the machine quickly. Excessive load will be applied to the lifting cables and/or lifting tools, possibly causing them to break.**
- **Do not allow anyone close to, or underneath the lifted machine.**

Lifting

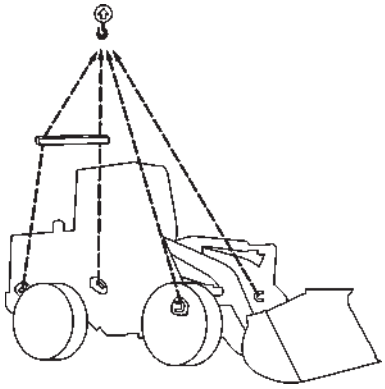

MNEC-05-001 ja

1. Straighten the machine and position the bucket so it sits level on the ground.
2. Put the control lever lock switch in the LOCK "🔒" position.
3. Lock the front and rear frames with the articulation lock bar.
4. Stop the engine. Remove the key from the key switch.
5. Close and lock all doors and covers.
6. When lifting using a wire rope and a scale, ensure that it is long enough so that the rope does not come in contact with the machine.
   (Reference Information: "Lifting Angle and Minimum Length of Wire Rope")
   Remove the rear fender.
   To prevent damage to the machine, cover the wire rope in cloth as required. Be sure to use the specified lifting tools.
7. Position the crane appropriately.
8. Attach the wire ropes to the metal lifting lugs at the front and rear frame.

Length and Load of Wire Rope/Support bar

This chart is not a guarantee of safety when lifting the machine.
Please use as a reference material when lifting the machine.

The angle between the vertical line and the wire rope

ZW140-7
Machine Mass For Calculation W=13.7 t

	The Angle Between The Vertical Line And The Wire Rope		Length Of The Attachment Point Of The Lifting Accessory		Distributed Lifting Force		Working Load Limit Safety Factor : S=6	
Wire Rope 1	θ1	16.4°	L1	6520 mm	W1	3.6 t	WLL1	22 t
Wire Rope 2	θ2	24.9°	L2	3350 mm	W2	3.9 t	WLL2	24 t
Wire Rope 3	θ3	12.6°	L3	3210 mm	W3	3.6 t	WLL3	22 t
Lifting Beam	-	-	L4	2240 mm	W4	3.8 t	WLL4	23 t

ZW160-7
Machine Mass For Calculation W=14.0 t

	The Angle Between The Vertical Line And The Wire Rope		Length Of The Attachment Point Of The Lifting Accessory		Distributed Lifting Force		Working Load Limit Safety Factor : S=6	
Wire Rope 1	θ1	16.7°	L1	6530 mm	W1	3.6 t	WLL1	22 t
Wire Rope 2	θ2	24.7°	L2	3350 mm	W2	4.0 t	WLL2	24 t
Wire Rope 3	θ3	12.2°	L3	3200 mm	W3	3.8 t	WLL3	23 t
Lifting Beam	-	-	L4	2240 mm	W4	4.0 t	WLL4	24 t

ZW160PL-7
Machine Mass For Calculation W=14.5 t

	The Angle Between The Vertical Line And The Wire Rope		Length Of The Attachment Point Of The Lifting Accessory		Distributed Lifting Force		Working Load Limit Safety Factor : S=6	
Wire Rope 1	θ1	16.6°	L1	6530 mm	W1	3.6 t	WLL1	22 t
Wire Rope 2	θ2	24.0°	L2	3330 mm	W2	4.3 t	WLL2	26 t
Wire Rope 3	θ3	11.8°	L3	3200 mm	W3	4.0 t	WLL3	24 t
Lifting Beam	-	-	L4	2240 mm	W4	4.2 t	WLL4	26 t

NOTE

The above values are calculated based on the mass of the machine during operation.
For inquiries regarding non-above specification machines, contact Authorized Dealer.

Please use a wire rope and a support bar strong enough for the above load when lifting the machine.

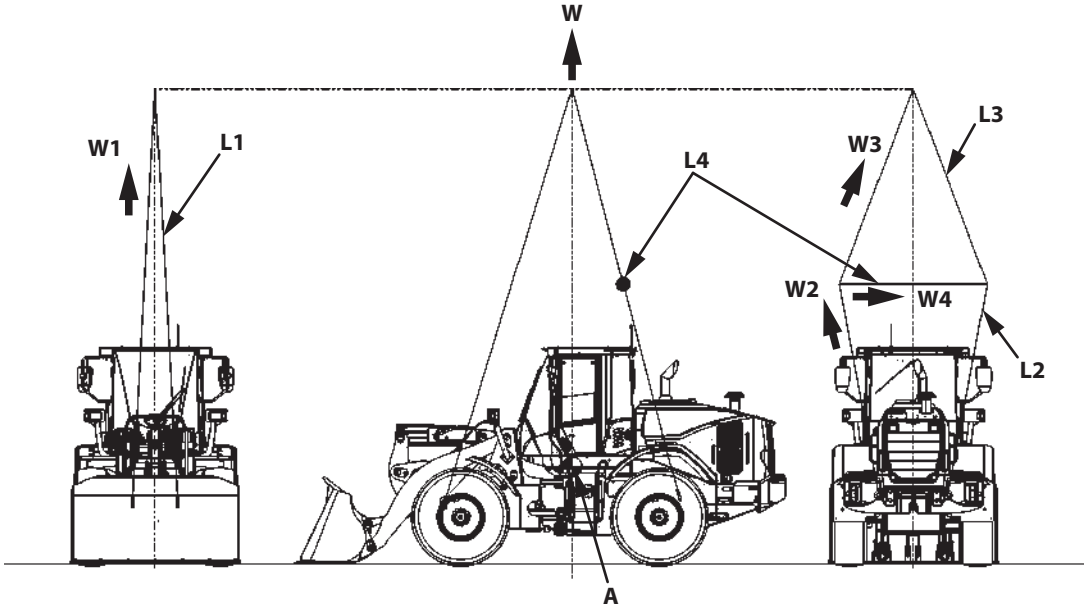

MNTL-06-003-1 ja

A: Center of Gravity
L1: Wire Rope 1
L2: Wire Rope 2
L3: Wire Rope 3
L4: Lifting Beam

NOTE

The center of gravity position varies, depending on the specification.

Correct Maintenance and Inspection Procedures

SA-005 ja

Learn how to correctly perform maintenance on the machine by following the correct maintenance and inspection procedures shown in this manual.

Inspect the machine daily before starting it.

- Do operating devices and instruments function normally?
- Are there any problems with the amount, leakage of or dirtiness of coolant, fuel or hydraulic oil?
- Are there any leaks, kinked, frayed or damaged hoses and lines?
- Are there any abnormal noises or heat being generated by the machine, or issues with its appearance? (Do a walk around inspection)
- Are these any loose mounting bolts or nuts?

If anything abnormal is found during an inspection or during operation, investigate the cause and repair it immediately, or consult Authorized Dealer.

IMPORTANT

- **Use only recommended coolant, DEF, fuel and lubricants.**
- **Only use genuine Hitachi Construction Machinery parts. Using anything other the genuine Hitachi Construction Machinery products may lead to a serious accident or breakdown.**
- **Breakdowns due to using parts other than those specified or improper handling invalidate the warranty.**
- **Never adjust the engine governor or hydraulic system relief valve.**
- **Protect electrical parts (including sensors and connectors) from water and steam.**
- **Do not expose the transmission oil filler port or axle air breather area to high pressure water or steam.**
- **Never disassemble electronic components such as the controller, sensors, etc.**
- **Never adjust the engine fuel system or hydraulic components.**
- **Do not mix poor quality diesel fuel, drainage agents, fuel additives, gasoline, kerosene, alcohol, or an alternative type of lubricating oil with the specified diesel fuel. Use of an improper fuel may deteriorate performance of fuel filters and can cause problems in the lubricated parts of the injector. It can also affect the engine parts and aftertreatment device, leading to engine trouble.**
- **Use genuine Hitachi Construction Machinery high performance filters.**

- Machine Information
  This vehicle provides a body information controller that stores vehicle operation information for preventive maintenance.
  During the course of maintaining the vehicle, our authorized service personnel may download the stored information.
  Consult Authorized Dealer for details on the function of this device.
- Communication Equipment Operation
  It is not necessary to inspect or operate the communication equipment; however if a problem with the terminal is noticed, consult Authorized Dealer.
  Before installing any attachment that covers the roof, such as a head guard, consult Authorized Dealer.
  Never spray water on the communication equipment or the wiring.
- Inquire with your local environmental or recycling center or Authorized Dealer, for the proper way to recycle or dispose of oils, fuel, coolant, filters, batteries, DEF and other waste.

Names of Components

ZW140-7,160-7

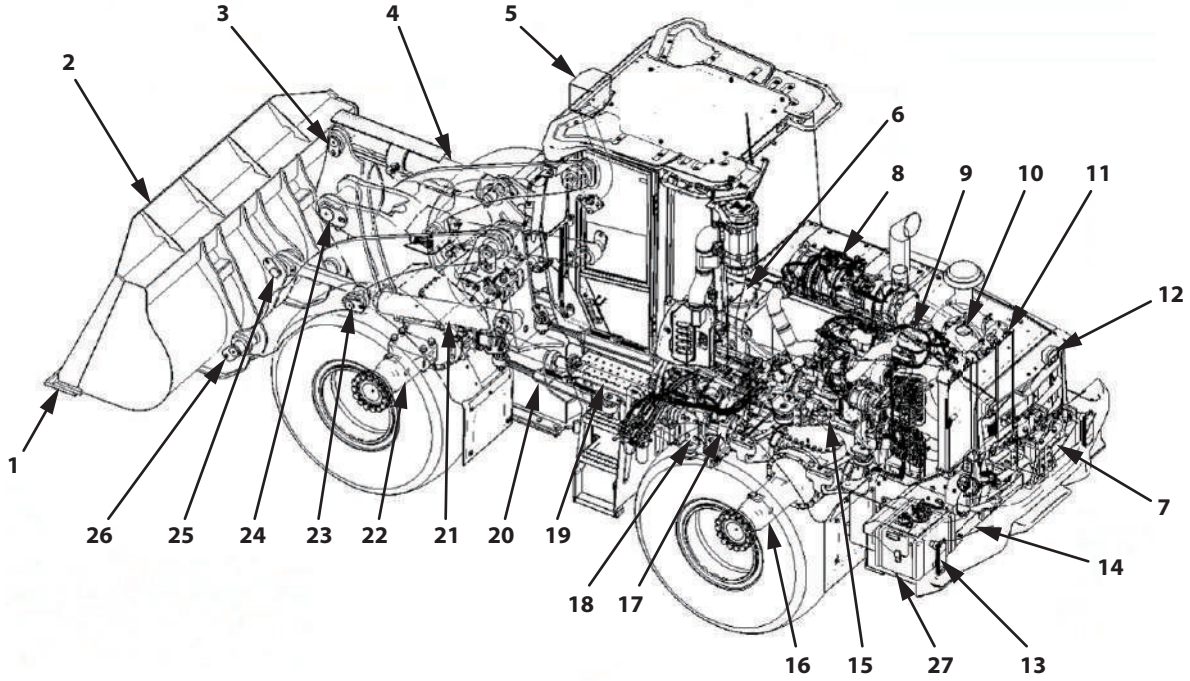

MNTL-07-010-2 ja

1. Bolt on Cutting Edge (BOC)
2. Bucket
3. Bucket Cylinder Pin
4. Bucket Cylinder
5. Front Combination Light
6. Hydraulic Oil Tank
7. Battery
8. Aftertreatment Device
9. Expansion Tank
10. Air Cleaner
11. Radiator, Coolers
12. Work Light
13. Rear Combination Light
14. Fuel Tank
15. Engine
16. Rear Axle
17. Rear Propeller Shaft
18. Transmission
19. Center Propeller Shaft
20. Steering Cylinder
21. Lift Arm Cylinder
22. Front Axle
23. Lift Arm Cylinder Pin
24. Bell Crank Pin
25. Bucket Link Pin
26. Bucket Pin
27. DEF Tank

ZW160PL-7

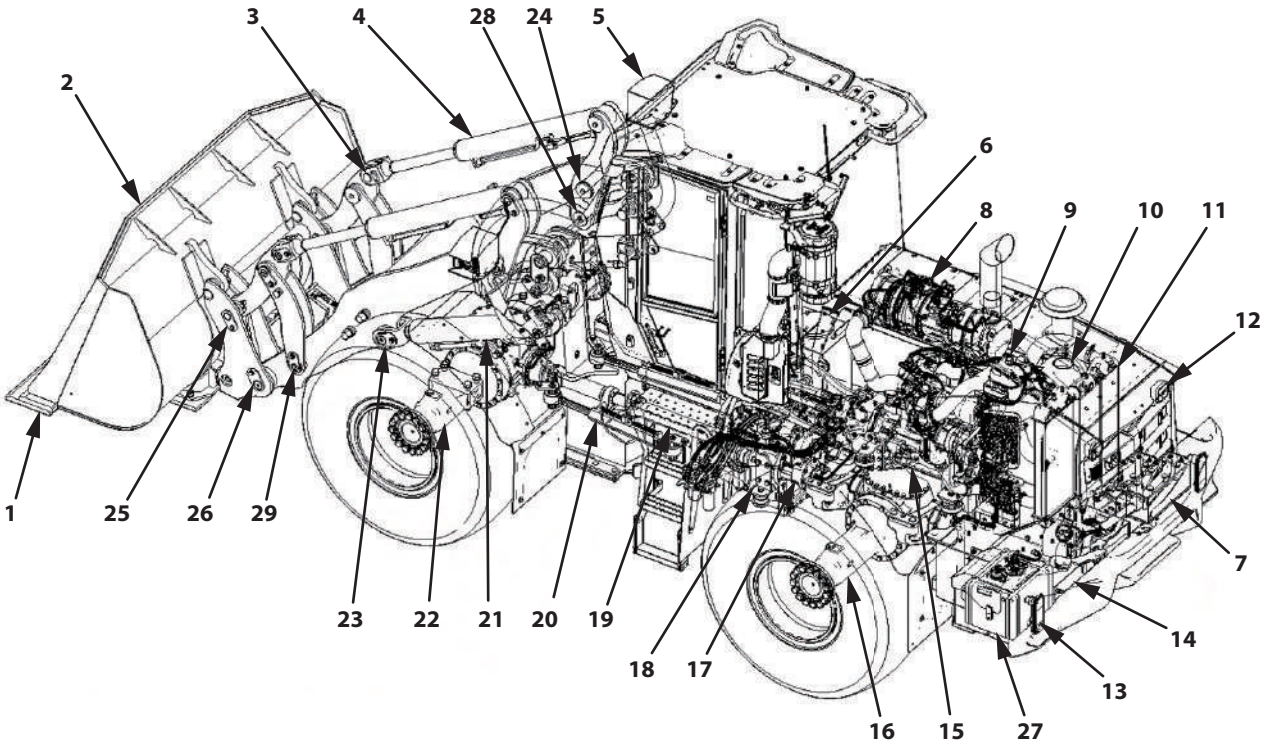

MNTL-07-001-2 ja

1. Bolt on Cutting Edge (BOC)
2. Bucket
3. Bucket Cylinder Pin
4. Bucket Cylinder
5. Front Combination Light
6. Hydraulic Oil Tank
7. Battery
8. Aftertreatment Device
9. Expansion Tank
10. Air Cleaner
11. Radiator, Coolers
12. Work Light
13. Rear Combination Light
14. Fuel Tank
15. Engine
16. Rear Axle
17. Rear Propeller Shaft
18. Transmission
19. Center Propeller Shaft
20. Steering Cylinder
21. Lift Arm Cylinder
22. Front Axle
23. Lift Arm Cylinder Pin
24. Bell Crank Pin
25. Bucket Link Pin
26. Bucket Pin
27. DEF Tank
28. Link Pin
29. Guide Pin

Check the Hour Meter Regularly

Refer to the “Maintenance Guide” for information about lubricants, check and adjustment intervals. A “Maintenance Guide Table” is affixed on the inside of the steps on the left side. Refer to the next page.

This manual recommends grouping the intervals into three categories as follows:

Daily	:To be conducted daily before operation
Monthly checks	:To be conducted regularly, once per month
Annual check	:To be conducted regularly, once per year

Inspection and maintenance intervals shown in this manual are those for machines operated under normal conditions. If a machine is operated under more severe conditions, shorten the intervals.

Maintenance Guide Table

A maintenance guide table is affixed on the inside of the steps on the left side. Lubricate and/or service parts at the intervals indicated in the table so that all necessary maintenance can be performed regularly.

- Symbol Marks
  The following symbols are used in the maintenance guide table.

	Grease (Front Joint, Cylinder Pin, Propeller Shaft)		Hydraulic Oil
	Engine Oil		Hydraulic Oil Filters (Pilot Filter, HST Charge Filter, Return Filter, Suction Filter, Air Breather Element)
	Engine Oil Filter		Gear Oil (Final reduction gear, differential)
	Coolant (Long-Life Coolant)		Fuel
	Transmission Oil (Transmission)		Fuel Filter (Fuel Filter, Fuel Pre-filter)
	Transmission Oil Filter		DEF/AdBlue®
			DEF Filter (Supply Module Main Filter, DEF Tank Water Supply Inlet Filter)

- Maintenance Guide Table
  ZW140-7,160-7

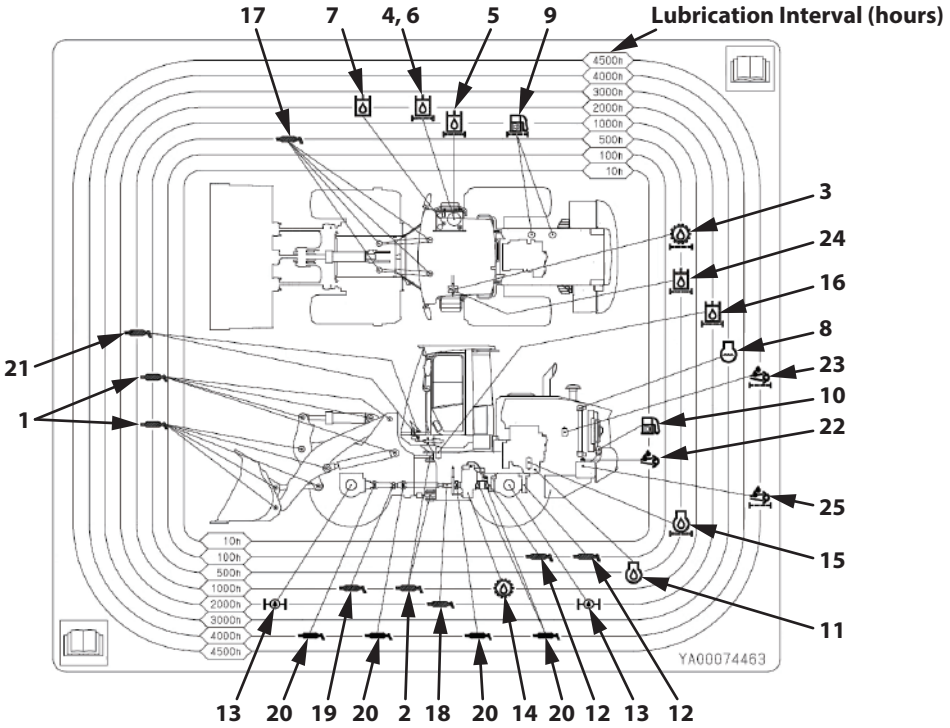

SSYA00074463-1 en_GB

	Item	Page		Item	Page
1	Grease (Front Joint Pins)	7-30	13	Axle Oil (Final Reduction Gear, Differential)	7-49
2	Grease (Frame Center Hinge Pin)	7-37	14	Transmission Oil	7-46
3	Transmission Oil Filter	7-46	15	Engine Oil Filter	7-42
4	Hydraulic Oil Filter (Suction)	7-58	16	Oil Separator Element	7-59
5	Hydraulic Oil Filter (Return Filter)	7-61	17	Grease (Steering Cylinder Pin)	7-36
6	Air Breather Element	7-64	18	Grease (Propeller Shaft Spline)	7-39
7	Hydraulic Oil	7-55	19	Grease (Propeller Shaft Center Support)	7-38
8	Coolant (Long-Life Coolant)	7-91	20	Grease (Propeller Shaft Universal Joint)	7-38, 7-39
9	Fuel Pre-filter, Fuel Filter	7-80, 7-81	21	Grease (Brake Pedal)	7-40
10	Fuel (Diesel)	7-73	22	DEF/AdBlue®	7-125
11	Engine Oil	7-42	23	Replace DEF Supply Module Main Filter Element	7-128
12	Grease (Axle Support Pin)	7-38	24	HST Charge Filter	7-63
			25	DEF Tank Water Supply Inlet Filter	

ZW160PL-7

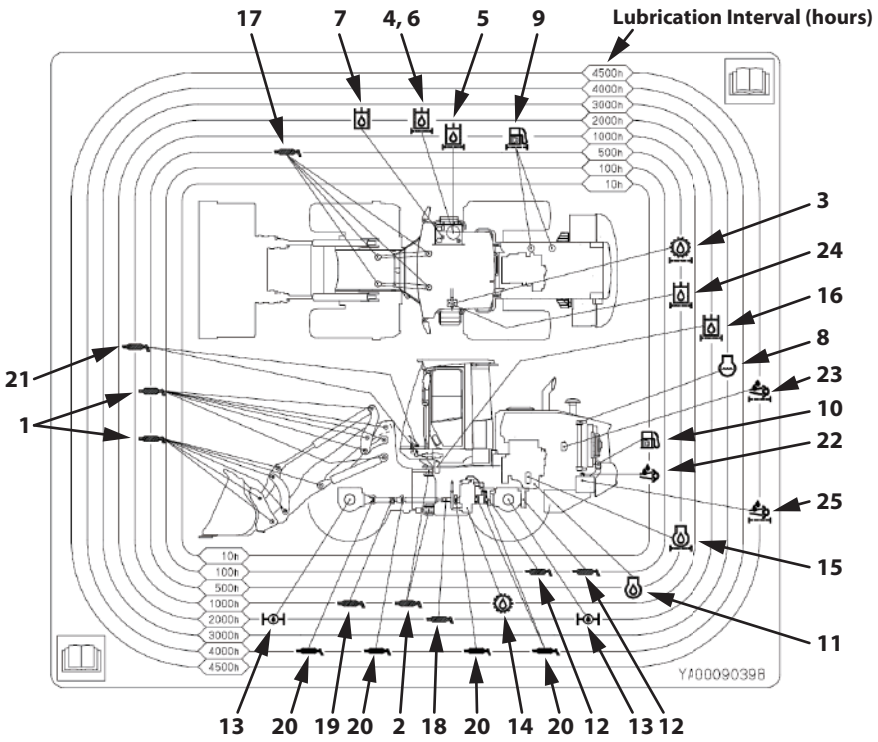

SSYA00090398-1 en_GB

	Item	Page		Item	Page
1	Grease (Front Joint Pins)	7-30	13	Axle Oil (Final Reduction Gear, Differential)	7-49
2	Grease (Frame Center Hinge Pin)	7-37	14	Transmission Oil	7-46
3	Transmission Oil Filter	7-46	15	Engine Oil Filter	7-42
4	Hydraulic Oil Filter (Suction)	7-58	16	Oil Separator Element	7-59
5	Hydraulic Oil Filter (Return Filter)	7-61	17	Grease (Steering Cylinder Pin)	7-36
6	Air Breather Element	7-64	18	Grease (Propeller Shaft Spline)	7-39
7	Hydraulic Oil	7-55	19	Grease (Propeller Shaft Center Support)	7-38
8	Coolant (Long-Life Coolant)	7-91	20	Grease (Propeller Shaft Universal Joint)	7-38, 7-39
9	Fuel Pre-filter, Fuel Filter	7-80, 7-81	21	Grease (Brake Pedal)	7-40
10	Fuel (Diesel)	7-73	22	DEF/AdBlue®	7-125
11	Engine Oil	7-42	23	Replace DEF Supply Module Main Filter Element	7-128
12	Grease (Axle Support Pin)	7-38	24	HST Charge Filter	7-63
			25	DEF Tank Water Supply Inlet Filter	

Preparation for Inspection and Maintenance

WARNING

The lift arm may rise if ride control switch (4) is left in AUTO. Turn the switch OFF to prevent an accident caused by unexpected lift arm movement.

CAUTION

A serious accident may occur due to unexpected movement of the machine. Engage the parking brake after stopping the machine.

Unless directed otherwise, park the machine as shown below before servicing the machine.

1. Park the machine on a firm, level surface.
2. Lower the bucket so it sits level on the ground.
3. Turn ride control switch (4) OFF.
   When turned OFF, all LEDs on the switch turn off. When the LEDs are lit, press ride control switch (4).
4. Put F-N-R lever (1) in neutral (N) and neutral lever lock (2) in the LOCK "🔒" position.
5. Engage the parking brake. (Parking brake switch (3) ON position)
6. Chock the tires.

SA-456 ja

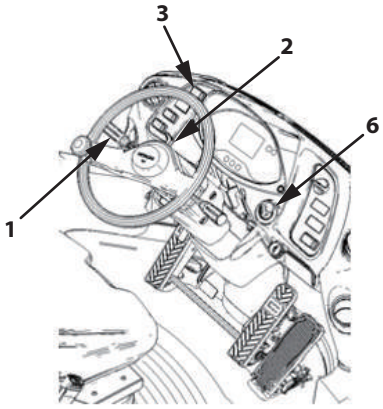

MNTL-07-011-1 ja

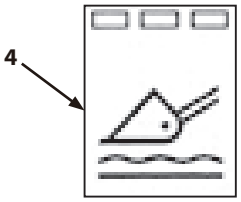

MNUD-01-214-3 ja

MNTL-01-094-5 ja

7. Run the engine at idling speed for 5 minutes. Turn key switch (6) OFF to stop the engine. Again, turn the key switch (6) ON and be sure to place control lever pilot shut-off switch (7) in the UNLOCK "🔓" position.
8. Operate control lever (8) 3 to 4 times full stroke up and down to relieve residual pressure in the hydraulic system. If inspection or maintenance must be done with the engine running, have someone watch during the procedure.
9. Put control lever pilot shut-off switch (7) in the LOCK "🔒" position.
10. Turn key switch (6) OFF and remove the key.
11. Hang a sign that reads "Being Serviced" in an easy-to-see location on the door or front attachment control lever before starting work.

MNTL-01-094-5 ja

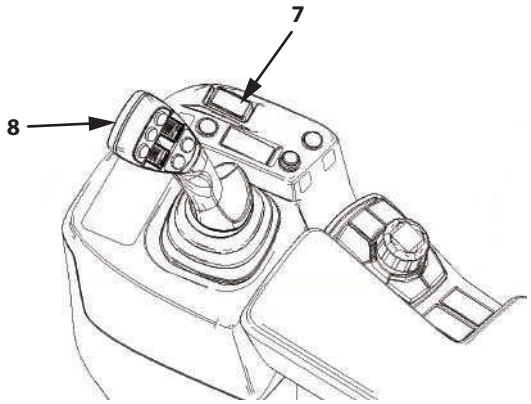

MNTL-07-012-1 ja

WARNING

To prevent accidents, never attempt to perform maintenance on the machine when the engine is running. If maintenance work with the engine running is unavoidable, strictly comply with the following items.

- **One person should be seated at the operator's station and be ready to stop the engine at any time, while communicating with other workers.**
- **When working around rotating parts like fans and belts is unavoidable, exercise due diligence to ensure that hands, feet, and clothing do not become entangled.**
- **If parts or tools are dropped or inserted into the fan or the belt, they may be propelled out or be severed. Do not drop or insert parts or tools into moving parts.**
- **Put control lever pilot shut-off switch (7) in the LOCK "🔒" position, so that the front attachment will not move.**
- **Never touch the control levers, handles and control pedals. If operating the control levers, handles or control pedals is unavoidable, signal co-workers to evacuate to a safe place.**

SA-2294 ja

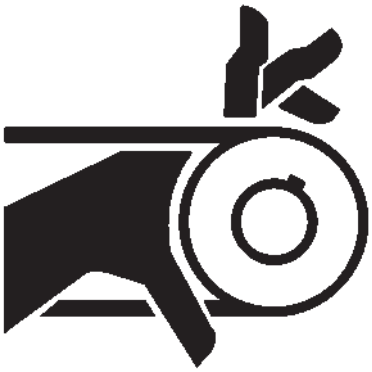

SA-026 ja

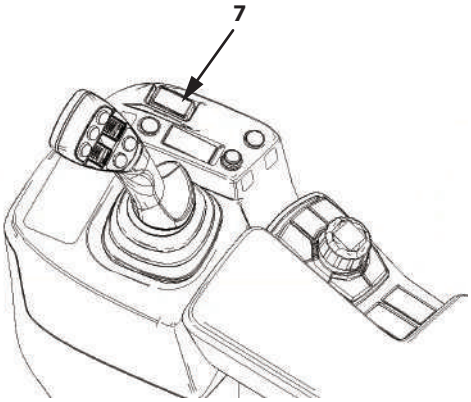

MNTL-07-012-2 ja

Lock the Frame

WARNING

Prior to working around the frame axis, install articulation lock bar (1) to lock the front and rear frames. This is to prevent an accident due to unexpected machine movement.

1. Align the front and rear frames of the machine with each other.
2. Remove β (beta) pin (3) to pull out set pin (2) from the front frame hole.
3. Rotate articulation lock bar (1) to align it with rear frame hole (4).
4. Install set pin (2) into rear frame hole (4) and the hole at the lock bar tip. Install β (beta) pin (3) to lock articulation lock bar (1) in place.

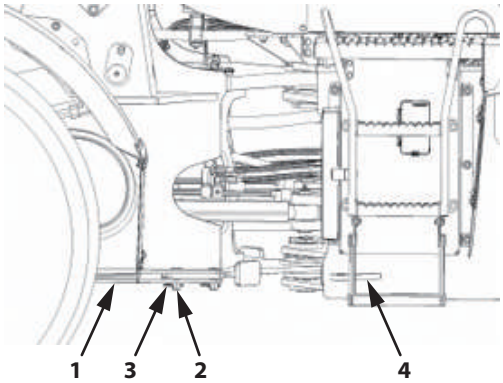

MNTL-07-013-1 ja

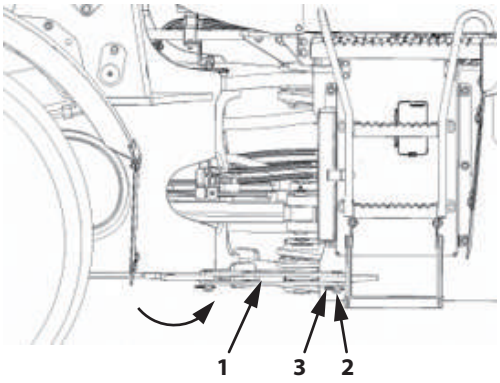

MNTL-07-014-1 ja

Maintenance and Inspection Side Covers

CAUTION

- **Close side cover (1) before driving or operating the machine.**
- **Do not keep side cover (1) open when parked on a slope, or while the wind is blowing hard. Side cover (1) may close accidentally possibly resulting in personal injury.**
- **When opening or closing side cover (1), be careful not to pinch any fingers.**
- **When side cover (1) is opened, the cover may move suddenly. Keep fingers clear of the cover.**
- **Before inspecting around the engine, secure side cover (1) with prop rod (4).**
- **If the machine is equipped with a fender (2) on side cover (1), never ride on fender (2).**

Pull latch (3) to open side cover (1).

NOTE

When a long machine inspection is required with side cover (1) kept open, hold open the side cover using prop rod (4) provided inside side cover (1).
Side cover (1) is designed with a prop slot. Place prop rod (4) in the prop slot beforehand.

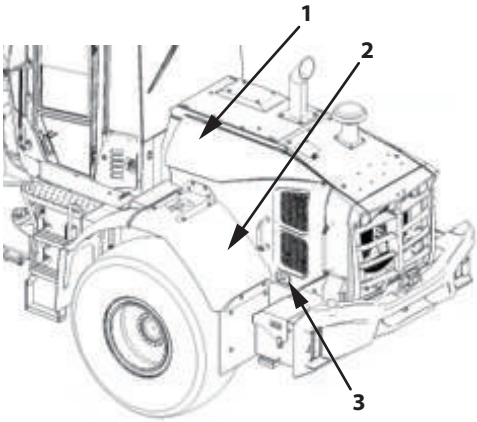

MNTL-07-015-1 ja

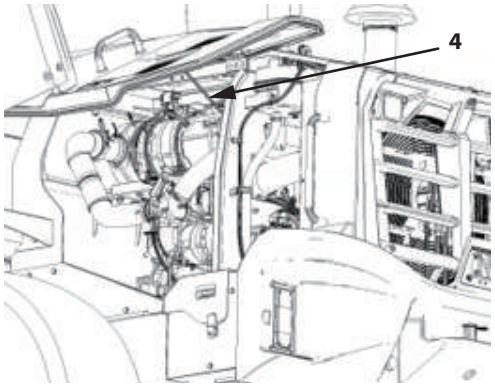

MNTL-07-016-1 ja

Maintenance Guide

The shaded parts in the table indicate inspection timing.

A. Greasing

Parts			Quantity	Interval (hours)							Page
				10	100	250	500	1000	2000	4000	
1.	Bucket Pin		2	★		★★					7-29
2.	Bucket Link Pin		2	★		★★					7-31
3.	Guide Pin	ZW160PL-7	4	★		★★					7-31
4.	Bucket Cylinder Pin	ZW140-7, 160-7	2	★		★★					7-32
		ZW160PL-7	4								
5.	Bell Crank Pin	ZW140-7, 160-7	1	★		★★					7-33
		ZW160PL-7	2								
6.	Link Pin	ZW160PL-7	4	★		★★					7-33
7.	Lift Arm Cylinder Pin		2	★		★★					7-34
8.	Lift Arm Cylinder Rod Pin		2	★		★★					7-35
9.	Lift Arm Pivot Pin		2	★		★★					7-36
10.	Steering Cylinder Pin		2	★		★★					7-36
11.	Steering Cylinder Rod Pin		2	★		★★					7-37
12.	Frame Center Hinge Pin		2								7-37
13.	Axle Support Pin		2								7-38
14.	Front Propeller Shaft Universal		1							★★★	7-38
15.	Propeller Shaft Center Support		1								7-38
16.	Center Propeller Shaft Universal		2							★★★	7-39
17.	Center Propeller Shaft Spline		1						★★★		7-39
18.	Rear Propeller Shaft Universal		2							★★★	7-40
19.	Brake Pedal		2								7-40
20.	Brake Pedal Linkage		1								7-40

★ Add grease daily during the first 50 hours of operation.
If excavation is performed in mud, water or snow, grease the pin after operation is complete.

★★ Grease at 250 hours the 1st time only after 50 hours of operation.
Grease every 500 hours after this. When working under severe conditions or continuous operation, shorten the lubrication interval.

★★★ When working under severe conditions or continuous operation, shorten the lubrication interval.

IMPORTANT

Grease the bucket and link pins daily during the first 50 hours of operation.

B. Engine

IMPORTANT

Use the specified oil and replace at the specified interval. Using anything other than the specified oil or continued use after the replacement interval will result in major malfunctions and/or damage to the engine.

Inspection/Maintenance Items			Qty.	Interval (Hours)							Page
				10	50	100	250	500	1000	2000	
1.	Engine Oil	Check Oil Level	-								7-41
2.	Engine Oil	Replace	16 L								7-42
3.	Engine Oil Filter	Replace	1					★			7-42
4.	Check Crankcase Breather Tube		-								7-44

★ Replace the engine oil filter at the same time as the engine oil.

C. Powertrain

Inspection/Maintenance Items				Qty.	Interval (Hours)							Page
					10	50	100	250	500	1000	2000	
1.	Transmission Oil	Check Oil Level		-		(When leaking oil)						7-45
2.	Transmission Oil	Replace		10 L					★			7-46
3.	Transmission Strainer	Clean		1								7-46
4.	Transmission Oil Filter	Replace		1								7-48
5.	Axle Oil	Replace (Front)	ZW140-7	24 L								7-49
			ZW160-7,160 PL-7	27 L								7-49
		Replace (Rear)	ZW140-7	25 L								7-49
			ZW160-7,160 PL-7	27 L								7-49
6.	Check for Oil Leaks Around the Axle and Cover			-								7-52
7.	Transmission Air Breather	Clean		1								7-52

★ 500 hours, the first time only.

D. Hydraulic System

Inspection/Maintenance Items		Qty.	Interval (Hours)								Page
			10	50	100	250	500	1000	1500	2000	
1.	Check Oil Level of Hydraulic Oil Tank	-	■								7-54
2.	Replace Hydraulic Oil/Clean Hydraulic Oil Tank *: Hydraulic Oil Amount (Amount of Oil to Replace)	150 L (96 L)								★	7-55
3.	Suction Filter Cleaning	2	Each time hydraulic oil is changed								7-58
4.	Replace Pilot Filter	1								■	7-59
5.	Replace Hydraulic Oil Tank Return Filter	1						■			7-61
6.	Replace HST Charge Filter Element	1					■				7-63
7.	Replace Air Breather Element	1								■	7-64
8.	Check the Pilot Accumulator for Function, Gas Leakage, Looseness and Damage	2								■	7-65
9.	Replace Pilot Accumulator	2	Every 4000 hours or 2 years								7-66
10.	Check the Ride Control Accumulator for Function, Gas Leakage, Looseness and Damage	1					■				7-66
11.	Check Gas Pressure in Ride Control Accumulator	1								■	7-67
12.	Check Gas Pressure of the Steering Accumulator	2								■	7-67
13.	Check Hoses and Lines for leaks, loose	-	■								7-68
	Inspect Hoses and Lines (Cracks, Bending, etc.)	-				■					7-68

★: Hydraulic oil changing intervals differ according to kind of hydraulic oils used.

*: Hydraulic oil amount means the entire amount of oil, including oil in the hydraulic oil tank, devices and lines. Amount at oil changes means the amount of oil that is changed during inspection and maintenance.

E. Fuel System

IMPORTANT

Use the specified fuel. Failure to do so may result in poor performance, malfunction and/or damage to the engine.

Inspection/Maintenance Items		Qty.	Interval (Hours)							Page
			10	50	100	250	500	1000	2000	
1.	Amount of Fuel in the Tank	-	■							7-73
2.	Drain Fuel Tank of Water and Sediment	1						■		7-76
3.	Drain Fuel Filter of Water	1	■							7-77
4.	Replace Main Fuel Filter Element	1						■		7-80
5.	Replace Fuel Pre-Filter Element	1						■		7-81
6.	Clean Solenoid Fuel Pump Strainer	1						■		7-82
7.	Check Fuel Hoses (Leaks, Cracks, etc)	-	■							7-84
	Check Fuel Hoses (Cracks, Bends, etc.)	-				■				7-84

F. Air Cleaner

Inspection/Maintenance Items			Qty.	Interval (Hours)							Page
				10	50	100	250	500	1000	2000	
1.	Air Cleaner Element	Clean	1	--- every 250 hours or when indicator is lit							7-85
		Replace	1	After cleaning 6 times (or 1 time a year)							7-85
2.	Check Air Intake System		-	■							7-86

G. Cooling System

Inspection/Maintenance Items		Qty.	Interval (Hours)							Page
			10	50	100	250	500	1000	2000	
1.	Coolant Level	-	■							7-88
2.	Check the Drive Belt	-	■							7-89
3.	Check the Drive Belt Tension	-	Every 1000 hours or 2 years, whichever comes first							7-90
4.	Replace Coolant	20 L	Every 3000 hours or 2 years, whichever comes first							7-91
5.	Clean the Radiator and Oil Cooler	-					★			7-92

★ Clean as needed when the machine is operated in dusty worksites.

IMPORTANT

For details on coolant, refer to the section (7-25) of "Long-Life Coolant".

H. Electrical System

Inspection/Maintenance Items			Qty.	Interval (Hours)							Page
				10	50	100	250	500	1000	2000	
1.	Battery	Check Electrolyte Level	2			■					7-97
		Electrolyte Specific Gravity	2				■				7-99
2.	Monitor Functions, Instrument Operation		-	■							7-101
3.	Lamps Light or Flash		-	■							7-102
4.	Check Horn and Reverse Buzzer		-	■							7-102
5.	Check Electrical Wiring and Fuses		-		■						7-103

I. Brake System

Inspection/Maintenance Items		Qty.	Interval (Hours)							Page
			10	50	100	500	1000	2000	4000	
1.	Check Braking (Left/Right Interlocked)	-	■							7-104
2.	Check the Parking Brake	-	■							7-105
3.	Check the Accumulator Function, Check for Gas Leakage, Looseness and Damage	2				■				7-106
4.	Check Gas Pressure of the Accumulator	2						★		7-107
5.	Replace Parking Brake Accumulator	1							■	7-107
6.	Check Brake Discs (Service and Parking)	-						■		7-107

★ Check the ride control accumulator clamp as well.

J. Tires

Inspection/Maintenance Items			Qty.	Interval (Hours)							Page
				10	50	100	250	500	2000	4000	
1.	Check/Adjust Tire Pressure	Inspect	4								7-108
		Adjust	4	As required							7-108
2.	Check for Damage to Tires	Inspect	4								7-109
3.	Retighten Wheel Bolts	Adjust	4		★						7-110

★ 50 hours, the first time only.

K. Air Conditioner

Inspection/Maintenance Items				Qty.	Interval (Hours)							Page
					10	50	100	250	500	1000	2000	
1.	Air Conditioner	Fresh Air Filter	Clean	1			★					7-114
			Replace	1	After Cleaning 10 Times							7-114
		Circulating Air Filter	Clean	1			★					7-117
			Replace	1	After Cleaning 10 Times							7-117
2.	Check Air Conditioner Unit			-	Every 6 Months							7-118
3.	Check Lines			-	Every 6 Months							7-118
4.	Check the Condenser			1	Every 6 Months							7-119
5.	Check the Drive Belt			1	Every 6 Months							7-119
6.	Check Refrigerant Level			1	Every 6 Months							7-120
7.	Replace the Air Conditioner Receiver Drier			1	16000 hours or every 8 years, whichever comes first							7-121
8.	Check the Compressor and Pulley			1	1 time a year							7-122

★ Clean every 100 hours or once a week, whichever comes first.
When used on dusty work sites, clean and replace sooner.

L. Aftertreatment Device

Inspection/Maintenance Items		Qty.	Interval (Hours)							Page
			10	100	250	500	1000	2000	4500	
1.	Check Muffler Filter and Replace Element	1							★	7-123
2.	Check and Clean Aftertreatment Device	1	As required							7-123

★ Consult Authorized Dealer.

M. Urea SCR System

Inspection/Maintenance Items			Qty.	Interval (Hours)							Page
				10	100	250	500	1000	2000	4500	
1.	DEF/AdBlue®	Inspect	1								7-125
2.	Replace DEF Supply Module Filter	Main Filter	1								7-128
		Frost Protection Filter	1								7-128
3.	Replace DEF Tank Water Supply Inlet Filter										7-130

N. Miscellaneous

Inspection/Maintenance Items			Qty.	Interval (Hours)								Page
				10	50	100	250	500	1000	2000	4500	
1.	Check Bucket Teeth and Cutting Edge		-									7-131
2.	Check and Replace the Seat and Seat Belt	Inspect	1									7-132
		Replace	1	Every 3 years								7-132
3.	Check ROPS Cab and Resin Cab Roof Damage, Loose Bolts		-									7-132
4.	Check Level of Washer Fluid		-									7-133
5.	Check the Amount of Play in Steering Wheel		-									7-134
6.	Accelerator Pedal Operation, Color and Sound of Exhaust Gas		-									7-135
7.	Damage or Looseness of Rear View Mirrors		-									7-136
8.	Damage or Looseness of Steps or Handrails		-									7-137
9.	Clean Engine Compartment and Engine Cover		-									7-138
10.	Clean the Camera Lens	Rear View Camera	1									7-138
		Side View Camera (Optional)	2									7-138
11.	*Inspect and Adjust Valve Clearance		-									7-139
12.	*Retighten the Front Axle Mounting Bolts, Rear Axle Support Mounting Bolts		-		★							7-139
13.	Tighten and Retighten Nuts and Bolts		-		★							7-140
14.	Check Aerial Angle Camera Image Daily (Optional)		-									7-156
15.	Check Aerial Angle Camera Image (Optional)		-	When work is done that changes the camera mounting position								7-157
16.	Check and Clean the Rear View Obstacle Detection Sensor (Optional)		-									7-157
17.	Check the Operation of the Rear View Obstacle Detection Sensor (Optional)		-	When work is done that changes the sensor mounting position								7-158

NOTE

**Contact Authorized Dealer for inspection and maintenance.*

★ 50 hours, the first time only.

Periodic Replacement of Parts

To ensure safe operation and a long service life, conduct periodic inspection and maintenance of the machine. Any defectiveness of the parts listed below in particular may cause an emergency resulting in personal injury or physical damage. It is difficult to gauge the remaining service life of parts listed below simply by how the machine feels while driven or by visual inspection. For this reason, replace these parts with new ones after a certain period of use, even if no particular abnormality is found. In addition, if a problem is found during inspection or servicing, replace the part even if it has not reached its replacement interval.
When replacing hoses, check the clamps for deformation, cracks, or other signs of deterioration, and replace as necessary. Replace the hoses listed below regularly. If an abnormality is found, replace or tighten the hose. When replacement of the parts is required, contact Aurhorized Dealer.

Equipment Name		Replacement Part Name	Replacement Intervals
Engine	Fuel Tank	Hose	Every 2 years or 4000 hours whichever comes first
	Fuel Filter	Hose	
	Oil Filter	Hose	
	Heater	Hose	
	Aftertreatment Device	DEF hoses	
Brake Device	Brake Valve	Seals (Rubber Parts)	1 time a year
	Accumulator	Accumulator (x3)	Every 2 years
	Wet-type Brake	Piston D-ring	Every 4 years
	Brake Lines	Hose	Every 2 years or 4000 hours whichever comes first
	Stop Light	Switch	Every 2 years
Steering Device	Steering Lines	Hose (Including Low Pressure Hose)	Every 2 years or 4000 hours whichever comes first
	Steering Cylinder	Seals (Rubber Parts)	Every 4 years
	Steering Valve	Seals (Rubber Parts)	Every 2 years
Hydraulic System	Pump	Suction Hose Hydraulic Hose (Main Pump to Main Valve) Hydraulic Hose (Fan Pump to Fan Motor or Fan Valve) Hydraulic Hose (Pilot Pump to Charging Valve) Hydraulic Hose (HST High Pressure Circuit Hose) Hydraulic Hose (HST Cooler Line Hose)	Every 2 years or 4000 hours whichever comes first
	Working Device	Bucket Cylinder Line Hose >Pilot Hose Lift Arm Cylinder Line Hose Hydraulic Oil Tank Return Hose Hydraulic Oil Cooler Line Hose Hydraulic Hose (Return Hose between Valve and Hydraulic Oil Tank)	Every 2 years or 4000 hours whichever comes first
Operator's Station	Seat Belt	Seat Belt	Every 3 years

NOTE

Be sure to replace seals, such as O-rings and gaskets, when replacing hoses.

Kinds of Oils

Grease

Kinds of Grease		Lithium Grease
Place Used		Front Joint Pins and Other
Outside temperature / Recommended product		-20 to 45 °C (-4 to 113 °F)
Hitachi Construction Machinery genuine parts		Hitachi Construction Machinery Grease NLGI EP-2
Others	Specifications	NLGI 2 EP

IMPORTANT

- **Use genuine Hitachi Construction Machinery grease as it was specifically designed and selected for use in this machine, based on testing. We recommend using genuine Hitachi Construction Machinery grease.**
- **Only use grease that meets the specifications listed above. Failure to do so may result in damage to the machine. If a problem arises due to using a non-conforming product, it invalidates the "warranty".**

Engine Oil

Kind of Oil		Engine Oil
Place Used		Engine Crank Case
Outside temperature / Recommended product		-20 to 45 °C (-4 to 113 °F)
Hitachi Construction Machinery genuine parts		Hitachi Construction Machinery engine oil 10W-40 DH-2
Others	Specifications	JASO DH-2

IMPORTANT

- **Use genuine Hitachi Construction Machinery engine oil as it was specifically designed and selected for use in this machine, based on testing. We recommend using genuine Hitachi Construction Machinery engine oil.**
- **Only use oil that meets the specifications listed above. Failure to do so may result in damage to the machine. If a problem arises due to using a non-conforming product, it invalidates the "warranty".**

Transmission Oil

Place Used		Transmission and Torque Converter
Kind of Oil		Transmission Oil
Outside temperature / Oil Manufacturer (No Particular Order)		-20 to 45 °C (-4 to 113 °F)
Hitachi Construction Machinery genuine parts		Transmission Oil 10W*
Others	Standard	Engine Oil API CF Class 10W

IMPORTANT

Use genuine Hitachi Construction Machinery transmission oil as it was specifically designed and selected for use in this machine, based on testing. We recommend using genuine Hitachi Construction Machinery products. If a genuine Hitachi Construction Machinery product is not used, use an oil that conforms with the above standard. If a genuine Hitachi Construction Machinery product is not used, the transmission may produce strange noises due to clutch shifting problems. If there are any problems, use a genuine Hitachi Construction Machinery product. Do not use a non-conforming product as doing so may result in damage to the machine. If a problem arises due to using a non-conforming product, it invalidates the "warranty". If there are any unclear points, consult Authorized Dealer.

NOTE

*Transmission oil with an * mark is used in new vehicles.*
Consult Authorized Dealer if using the machine in an environment where the outside temperature is -25 °C or less.

Recommended Axle Oil

Kind of Oil	Gear Oil
Place Used / Recommended product	Axle
Hitachi Construction Machinery genuine parts	New Axle Oil
	TH Multi

IMPORTANT

- **Use genuine Hitachi Construction Machinery axle oil as it was specifically designed and selected for use in this machine, based on testing. We recommend using genuine Hitachi Construction Machinery axle oil.**
- **Only use oil that meets the specifications listed above. Failure to do so may result in damage to the machine. If a problem arises due to using a non-conforming product, it invalidates the "warranty".**

Hydraulic Oil

Kind of Oil	Wear-resistant hydraulic oil	
Place Used	Hydraulic Equipment (Hydraulic Oil Tank)	
Outside temperature / Oil Manufacturer (No Particular Order)	-20 to 45 °C (-4 to 113 °F)	
Hitachi Construction Machinery genuine parts	Super EX46HN	
Miscellaneous		JCMAS HK VG46W compliant products
Change Interval	2000 Hr	

IMPORTANT

Use genuine Hitachi Construction Machinery hydraulic oil as it was specifically designed and selected for use in this machine, based on testing. We recommend using genuine Hitachi Construction Machinery products. If a genuine Hitachi Construction Machinery product is not used, use an oil that conforms to JCMAS HK VG46W. Do not use a non-conforming product as doing so may result in damage to the machine. If a problem arises due to using a non-conforming product, it invalidates the "warranty". If there are any unclear points, contact Authorized Dealer.

NOTE

- *Products that conform to JCMAS HK VG46W may require a replacement interval different to genuine Hitachi Construction Machinery products. If there are any unclear points, contact Authorized Dealer.*
- *For information on JCMAS HK VG46W conforming oils, refer to the Japan Lubricating Oil Society (JALOS) home page.*

Long-Life Coolant

Coolant Type	Long-Life Coolant (LLC)
Place Used	Radiator
Coolant Capacity	20 L
Brand, Standard	Hitachi Construction Machinery Long-Life Coolant

List of Consumable Parts

1. Filter Element Components

Engine Oil Filter	YA00083029
Engine Fuel Filter	YA00083039
Fuel Pre Filter	YA00083035
Air Cleaner Element (Outer)	263E237011
Air Cleaner Element (Inner)	263E237001
Air Conditioner Circulating Air Filter	YA00001490
Air Conditioner Fresh Air Filter (Single)	4251527
Air Conditioner Fresh Air Filter (Double)	YA00005725
Air Conditioner Receiver Dryer Kit	YA00080993
Cab Air Cleaner Filter	YA00077800
Hydraulic Oil Suction Strainer	263E752001
Hydraulic Oil Return Filter Element	263E752011
Pilot Filter Element	2655742471
Transmission Oil Filter	4370435
Air Breather Element	4437838
HST Filter Element	4370435
DEF Supply Module Main Filter	YA00058284
DEF Tank Water Supply Inlet Filter	YA00086726

2. Drive Belt

Drive Belt for AC Compressor	291F947002

3. Bucket Parts

			Part No.	Quantity
Cutting Edge	Center	ZW140-7	2641882061	1
		ZW160-7,160PL-7	263E882471	
	Right and Left side		2641882071	2
	Bolt	ZW140-7	5643051061	7
		ZW160-7,160PL-7		8
	Nut	ZW140-7	5660054751	7
		ZW160-7,160PL-7		8
Bucket Teeth	Center	ZW140-7	5644050002	5
		ZW160-7,160PL-7		6
	Left side		5644050023	1
	Right side		5644050013	1
	Bolt	ZW140-7	5644050031	14
		ZW160-7,160PL-7		16
	Nut	ZW140-7	5644050041	14
		ZW160-7,160PL-7		16
O-Ring	Bucket pin		2641872161	4
	Bucket Link Pin		2641872161	2

4. Combination Light and Other Light

			Part No.
Front Combination Light (LED)	Front Combination Light Assembly (Right)		YA00074320
	Front Combination Light Assembly (Left)		YA00074319
Rear Combination Light (LED)	Rear Combination Light Assembly (Right)		YA00045096
	Rear Combination Light Assembly (Left)		YA00045096
	Bulb	Turn Signal Light	4661236 (24V 21W)
Number Plate Light	Number Plate Light Assembly		3231505R91
	Bulb		4610062 (24V 10W)
Work Light (LED)	Front (Cab)	Work Light Assembly	YA00049494
	Front (Add On Cab)	Work Light Assembly	YA00049494
	Rear (Cab)	Work Light Assembly	YA00049494
	Rear	Work Light Assembly	YA00058952
Work Light (LED, High Brightness)	Front (Cab)	Work Light Assembly	YA00015760
	Front (Add On Cab)	Work Light Assembly	YA00015760
	Rear (Cab)	Work Light Assembly	YA00031518
	Rear	Work Light Assembly	YA00063511

5. Slow Blow Fuses

	Part No.
30 A	3988070250
70 A	4315073
120 A	3988070240
140 A	YA00021809

6. Seatbelt

Seatbelt	YA00091450

A. Greasing

WARNING

Apply the parking brake and the articulation lock bar.

NOTE

- *Until break-in operation is performed for more than 50 hours, lubricate the machine every day to get initial operational concordance.*
- *In case excavation is made in mud, water or snow, lubricate the machine after operation is complete.*
- *Sufficiently add high quality grease through the grease fittings. After removing contamination around the grease fitting, add grease. After greasing, thoroughly remove the old grease that was pushed-out from the seals.*

1 Bucket Pin

--- every 500 hours (250 hours at first time only)

Bucket pins (1) (One point each to right and left).

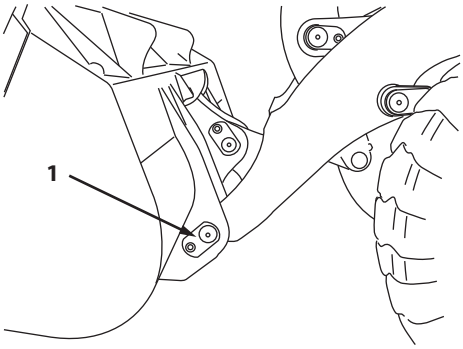

ZW140-7, 160-7

M4GB-07-004-1 ja

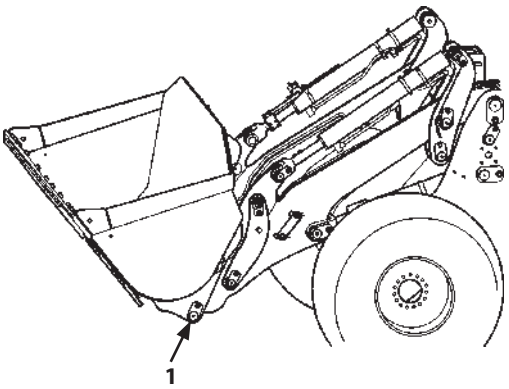

ZW160PL-7

M4GB-07-180-4 ja

2 Bucket Link Pin

--- every 500 hours (250 hours at first time only)

ZW140-7, 160-7:

One point each to bucket link pins (2) and (3).

ZW160PL-7:

Bucket link pins (2) (One point each to right and left).

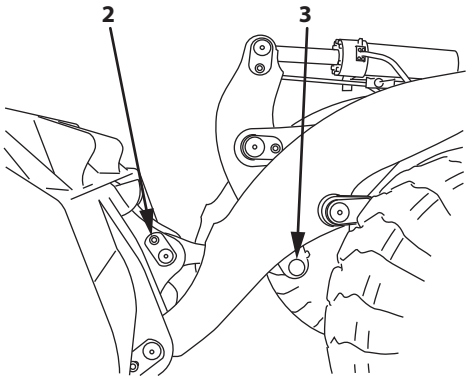

ZW140-7, 160-7

M4GB-07-005-5 ja

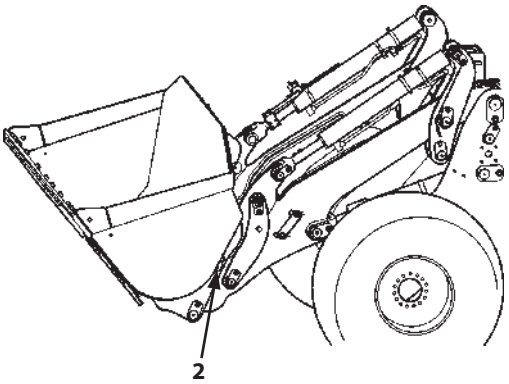

ZW160PL-7

M4GB-07-180-5 ja

3 Guide Pin (ZW160PL-7)

--- every 500 hours (250 hours at first time only)

One point each to guide link pins (4) and (5)(One point each to right and left).

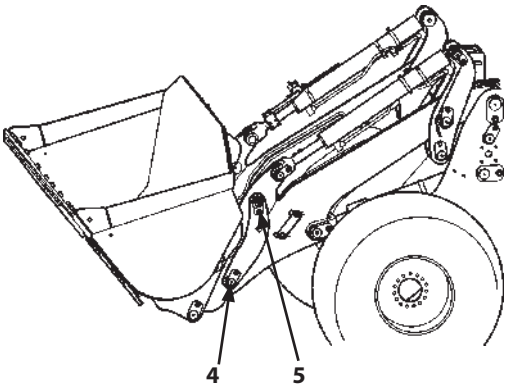

M4GB-07-180-6 ja

4 Bucket Cylinder Pin

--- every 500 hours (250 hours at first time only)

ZW140-7, 160-7:

Bucket cylinder pin (7) One point.

Bucket cylinder rod pin (6) One point.

ZW160PL-7:

Bucket cylinder pins (7) (One point each to right and left).

Bucket cylinder rod pins (6) (One point each to right and left).

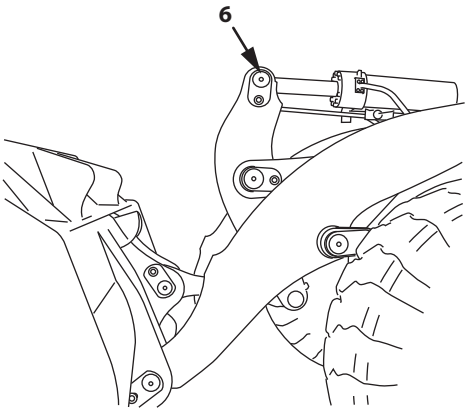

ZW140-7, 160-7

M4GB-07-005-6 ja

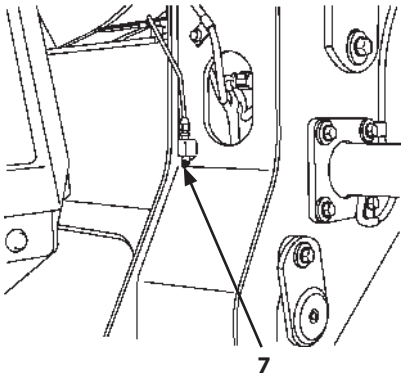

ZW140-7, 160-7

M4FC-07-003-1 ja

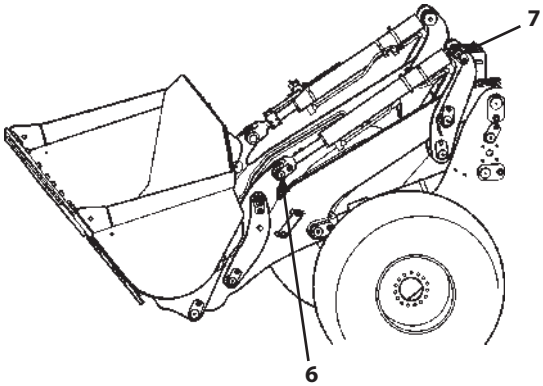

ZW160PL-7

M4GB-07-180-7 ja

5 Bell Crank Pin

--- every 500 hours (250 hours at first time only)

ZW140-7, 160-7:

Bell crank pin (8) One point.

ZW160PL-7:

Bell crank pins (8) (One point each to right and left).

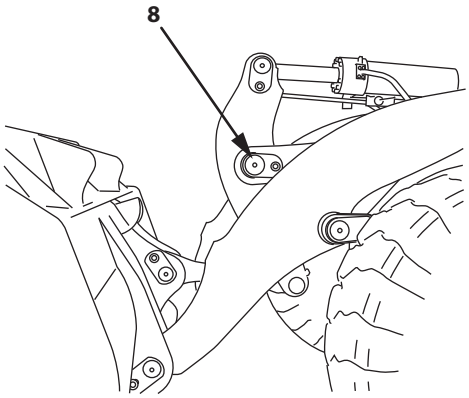

ZW140-7, 160-7

M4GB-07-005-7 ja

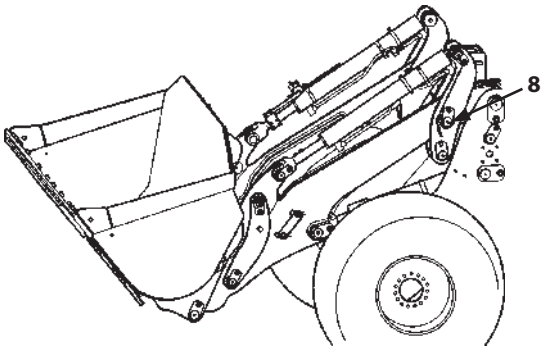

ZW160PL-7

M4GB-07-180-8 ja

6 Link Pin (ZW160PL-7)

--- every 500 hours (250 hours at first time only)

One point each to right and left link pins (9) and (10).

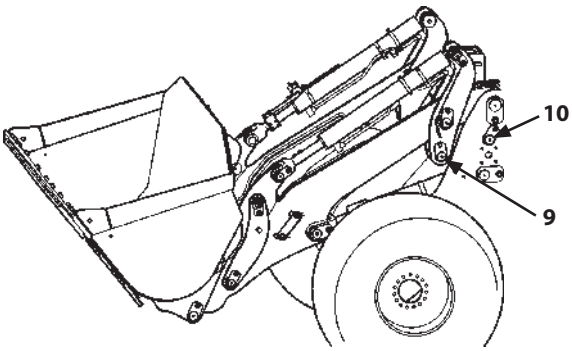

M4GB-07-180-9 ja

7 Lift Arm Cylinder Pin

--- every 500 hours (250 hours at first time only)

One point each to right and left lift arm cylinder rod pins (11).

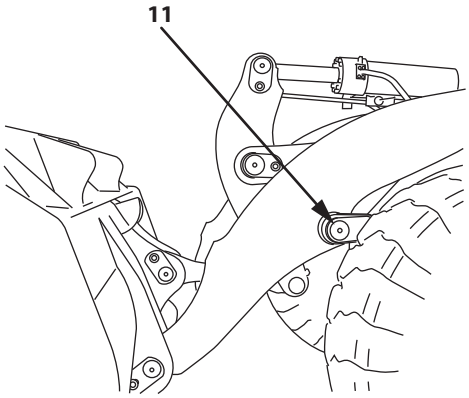

ZW140-7,160-7

M4GB-07-005-8 ja

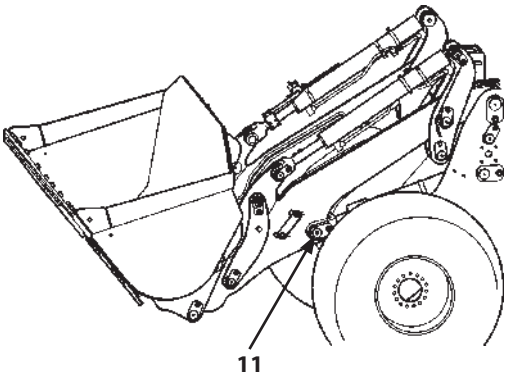

ZW160PL-7

M4GB-07-180-10 ja

8 Lift Arm Cylinder Rod Pin

--- every 500 hours (250 hours at first time only)

One point each to right and left lift cylinder pins (12).

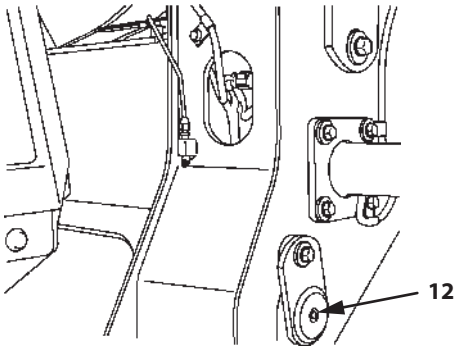

ZW140-7, 160-7

M4FC-07-003-2 ja

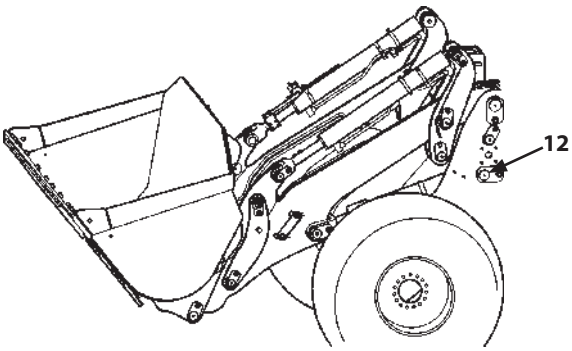

ZW160PL-7

M4GB-07-180-11 ja

9 Lift Arm Pivot Pin

--- every 500 hours (250 hours at first time only)

One point each to right and left lift arm pivot pins (13).

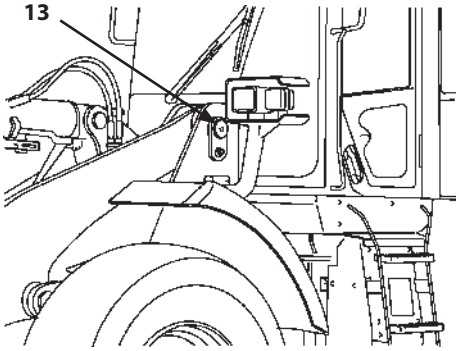

ZW140-7, 160-7

M4FC-07-004-1 ja

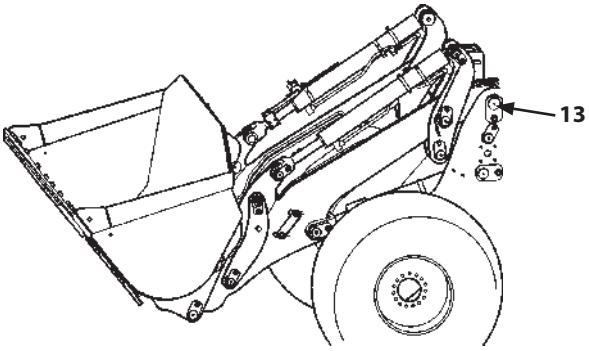

ZW160PL-7

M4GB-07-180-3 ja

10 Steering Cylinder Pin

--- every 500 hours (250 hours at first time only)

One point each to front right and left steering cylinder pins (14 and 15).

Cylinder left front (14)

Cylinder right front (15)

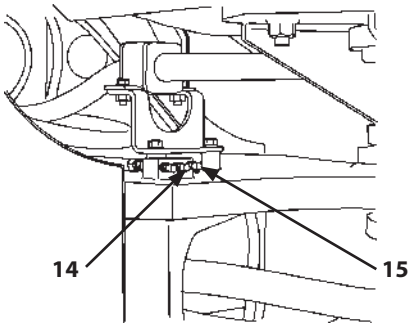

M4FC-07-005-1 ja

11 Steering Cylinder Rod Pin

--- every 500 hours (250 hours at first time only)

One point each to right and left steering cylinder rod pins (16) and (17).

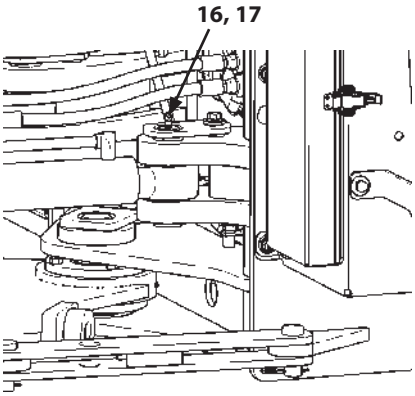

MNDF-07-056-1 ja

12 Frame Center Hinge Pin

--- every 1000 hours

One point each to upper and lower frame center hinge pins (18) and (19).

Upper (18)

Lower (19)

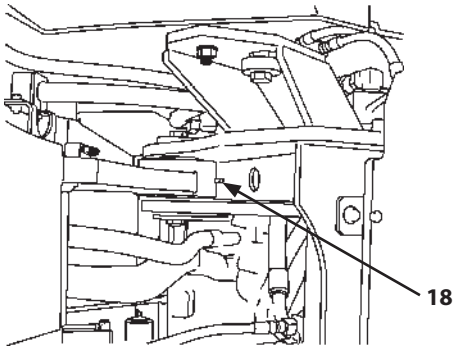

M4FC-07-007-1 ja

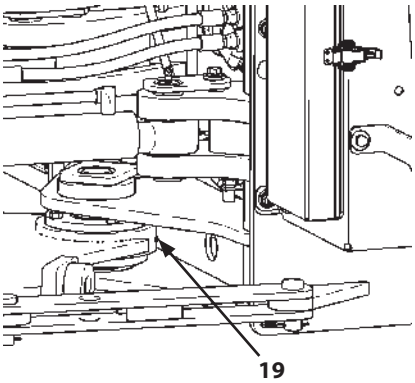

MNDF-07-056-2 ja

13 Axle Support Pin

--- every 100 hours

One point each to front and rear axle support pins (20) and (21).

Front (20)

Rear (21)

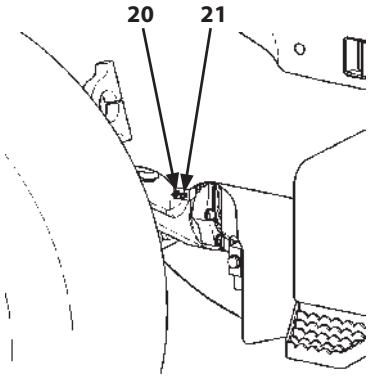

MNDF-07-003-1 ja

14 Front Propeller Shaft Universal

--- every 4000 hours

One point to front propeller shaft universal (22).

NOTE

When the machine is continuously operated under severe conditions for a long time, shorten the greasing intervals.

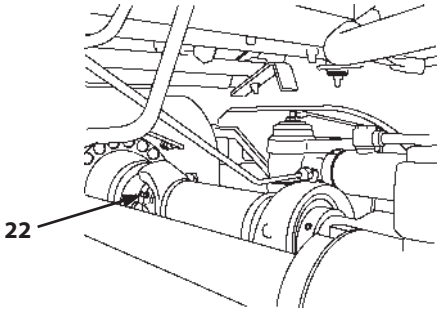

M4FC-07-010-1 ja

15 Propeller Shaft Center Support

--- every 1000 hours

One point to propeller shaft center support (23).

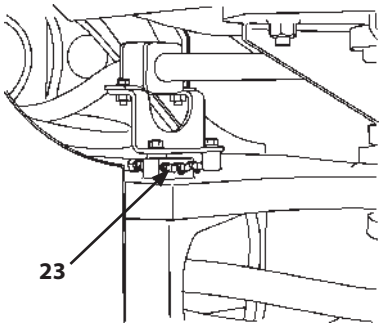

M4FC-07-005-2 ja

16 Center Propeller Shaft Universal

--- every 4000 hours

One point to center propeller shaft universal front (24).

One point to center propeller shaft universal rear (26).

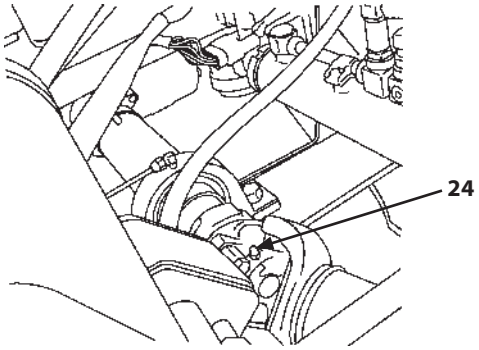

M4FC-07-011-1 ja

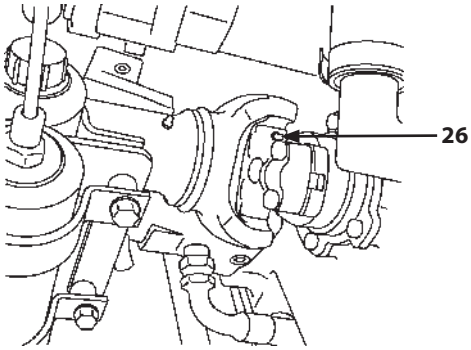

M4FC-07-012-2 ja

17 Center Propeller Shaft Spline

--- every 2000 hours

One point to center propeller shaft spline (25).

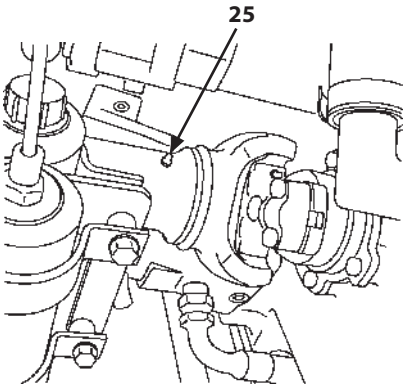

M4FC-07-012-3 ja

18 Rear Propeller Shaft Universal

--- every 4000 hours

Two points to rear propeller shaft universal (27).

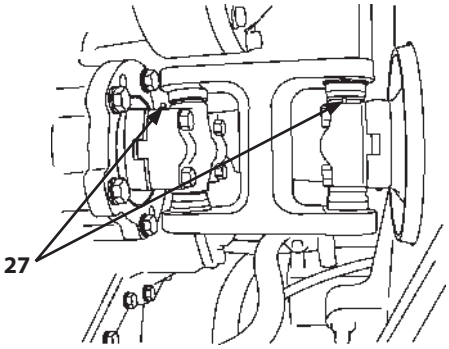

M4FC-07-013-1 ja

19 Brake Pedal

--- every 1000 hours

Grease both left and right points of brake pedal (28).

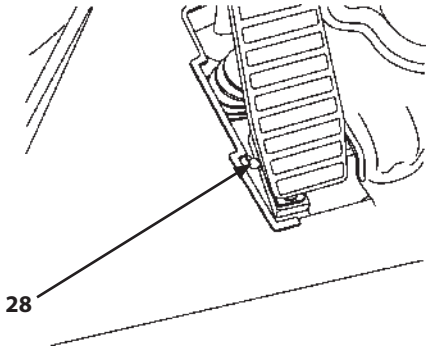

M4FC-07-014-2 ja

20 Brake Pedal Linkage

--- every 1000 hours

One point to brake pedal linkage (29).

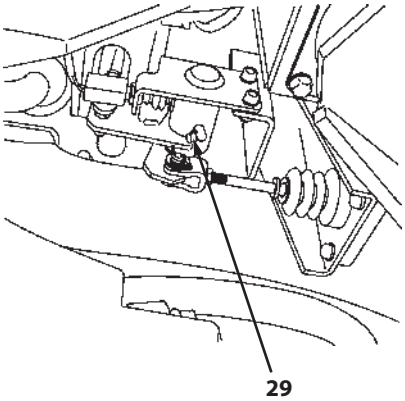

M4FC-07-015-2 ja

B. Engine

1 Engine Oil Level

--- every 10 hours (before starting the engine)

IMPORTANT

If the engine oil level is anything other than that specified, it may cause problems with the engine. (The oil level should be between the high and low marks on oil level gauge (1).)
If the engine oil level exceeds the upper limit, adjust it to the proper quantity before starting the engine.

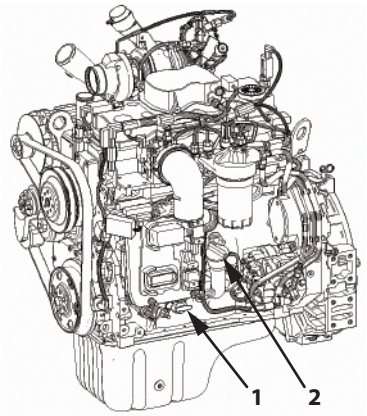

MNTL-07-017-1 ja

Check the oil level before starting the engine. Pull out oil gauge (1) and check for contamination and how dirty the oil is. Wipe off the end of the oil gauge with a clean cloth. Insert oil gauge (1), then remove it again and check the oil level. The oil level is fine if it is within the specified range on oil level gauge (1).
If the oil level is below the lower limit mark, add the recommended engine oil via oil filler (2).
If oil level is above the upper limit mark, remove drain plug (3) to drain out oil.
Check the oil level again.

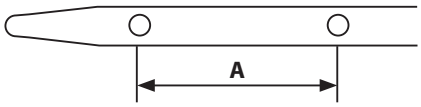

MNEK-00-044-2 ja

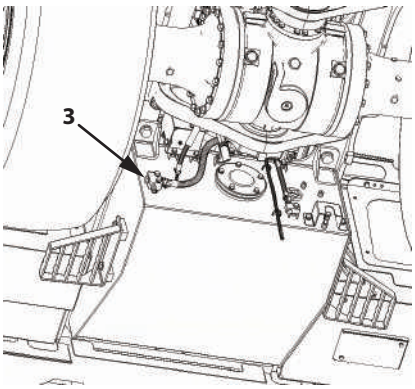

MNTL-07-018-1 ja

A: Specified Range

NOTE

The engine must be level when adding and checking the oil level.
When checking the level after operating the machine, do so at least 15 minutes after the engine stops.
(When the oil level has stabilized in the oil pan after coming back from the engine.)
If the oil is greatly discolored or dirty, or if contaminated, change the oil.

WARNING

Avoid spilling any oil when adding it. Things that burn easily, such as fuel, oil, debris, grease, accumulated coal dust, etc. can cause a fire.

2 Change Engine Oil

--- every 500 hours

3 Replace Engine Oil Filter

--- every 500 hours (before replacing the engine oil)

CAUTION

- **Engine oil may be hot just after operation. Wait for oil to cool before starting work.**
- **Avoid spillages when adding oil. If oil is spilled, wipe it up. If spilled oil is not wiped away, it may ignite and lead to a fire.**

  After refilling, make sure oil filler caps (2) and (4) are tightly closed.

1. Park the machine according to the instructions listed in section (7-8) of "Preparations for Inspections and Maintenance".
2. Clean the area around the oil filter.
3. Have a 20 L container on hand to catch oil as it drains.
4. Remove drain plug (3) next to the fuel tank and drain the oil.
5. Drain the oil from the oil filter cartridge.
6. Filter the oil through a clean cloth (B) and inspect the cloth for any small pieces of metal or other kinds of debris.

   (to next page)

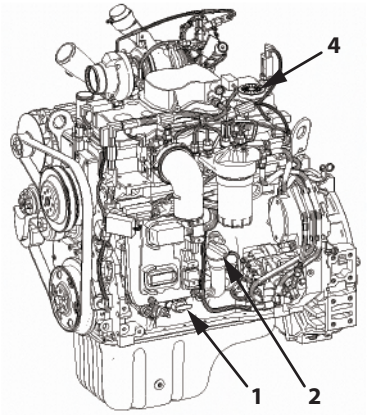

MNTL-07-017-2 ja

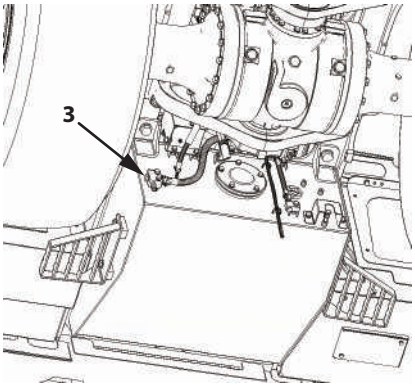

MNTL-07-018-1 ja

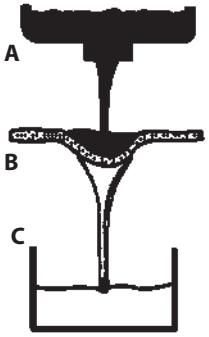

M104-07-010-3 ja

A:Oil Pan
B:Clean Cloth
C:Container

7. Turn cartridge element (5) counterclockwise with the filter wrench to remove it.
8. Pour clean oil into new element (5). Be careful not to let the oil overflow.
9. After coating the gasket and O-ring of the new cartridge with a thin film of engine oil, lightly turn the cartridge clockwise by hand until the gasket touches the seal face.
10. From that point, tighten engine oil filter 3/4 to 1 turn using the filter wrench. Take care not to overtighten the cartridge as doing so will deform it.

NOTE

Be sure not to let the gasket become twisted and damaged during installation. Make sure no oil is leaking from around the filter mounting surface.

11. Securely tighten drain plug (3).
12. Remove oil filler cap (2) and fill with the specified amount of engine oil.

    Engine oil amount: 16 L
13. Securely tighten oil filler cap (2).
14. Make sure oil filler cap (4) is tightly closed.
15. Make sure the oil level is between the marks on oil gauge (1) before starting the engine.
16. After starting the engine, check and make sure no oil is leaking from the seal.
17. Run the engine at slow idle for 5 minutes and then stop the engine. After 15 minute, recheck the oil level and add as needed.

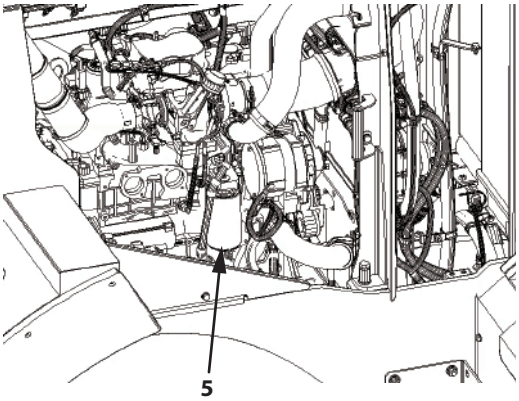

MNTL-07-019-2 ja

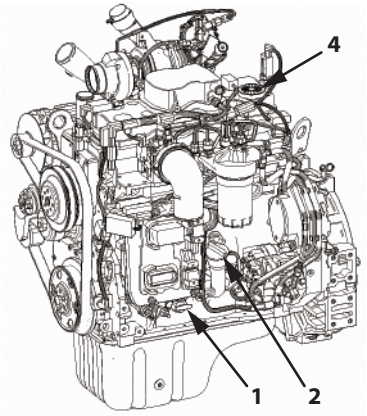

MNTL-07-017-2 ja

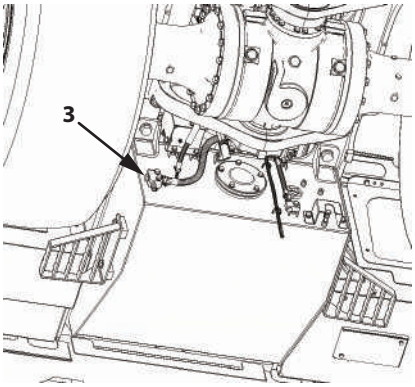

MNTL-07-018-1 ja

4 Check Crankcase Breather Tube

--- daily

WARNING

Engine oil may be hot just after operation. Wait for oil to cool before starting work. Failure to do so may result in a burn.

1. Park the machine according to the instructions listed in section (7-8) of “Preparations for Inspections and Maintenance”.
2. Inspect each section of tube (1) for mud, debris or ice.
3. If mud, debris, or ice is found, clean the tube with detergent and warm water or a solvent.
4. Check the crankcase breather tube for cracks or damage. If damaged or cracked, replace the tube with a new one.
5. Check for any oil leakage or loose clamps at the connection with the crankcase breather.
6. Check the clamp that secures tube (1) to the engine for looseness.

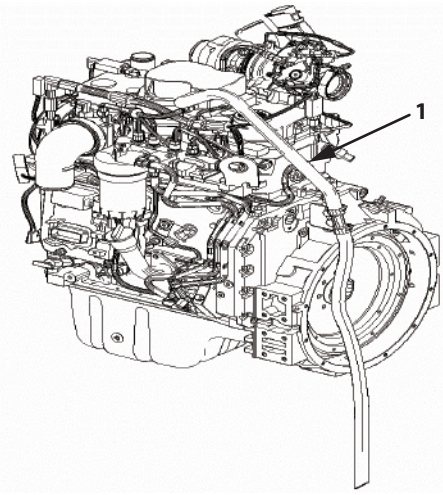

MNTL-07-020-1 ja

C. Powertrain

1 Check Oil Level of Transmission Oil

---every 10 hours

WARNING

Check the oil level while running the engine, and strictly observe the following points.

- **Move F-N-R lever to neutral and turn parking brake switch ON.**
- **Set the bucket level on the ground and put the control lever pilot shut-off switch of the front attachment control lever in the LOCK "🔒" position.**
- **Set the articulation lock bar.**

IMPORTANT

Do not start the engine when the transmission oil level is low. Damage to the transmission may result. Do not use any brand of transmission oil other than that listed in section (7-24) of "Kinds of Oils".

Check the oil level at the beginning when the oil temperature is low. Pull out oil gauge (1) and check for contamination and how dirty the oil is. Wipe off the end of the oil gauge with a clean cloth. Insert oil gauge (1), then remove it again and check the oil level. The oil level is fine if it is within the specified range on oil level gauge (1).
If low, refill with the recommended engine oil via transmission oil filler port (2). Check the oil level again after adding oil.

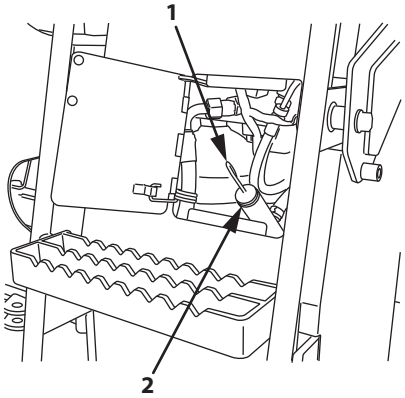

M4FC-07-019-1 ja

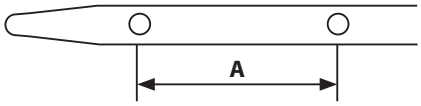

MNEK-00-044-2 ja

A: Specified Range

NOTE

The machine must be level when adding and checking the oil level. If the oil is greatly discolored or dirty, or if contaminated, change the oil.

2 Replace Transmission Oil

--- every 1000 hours (first time only, after 500 hours)

3 Clean the Transmission Strainer

---every 1000 hours

WARNING

- **A serious accident may occur due to unexpected movement of the machine. After stopping the machine, put F-N-R lever (1) in NEUTRAL and put neutral lever lock (3) in the LOCK"🔒" position. Then, engage parking brake (2) and stop the engine.**
- **Before changing the oil, install articulation lock bar (4) to lock the front and rear frames. This is to prevent an accident due to unexpected machine movement.**

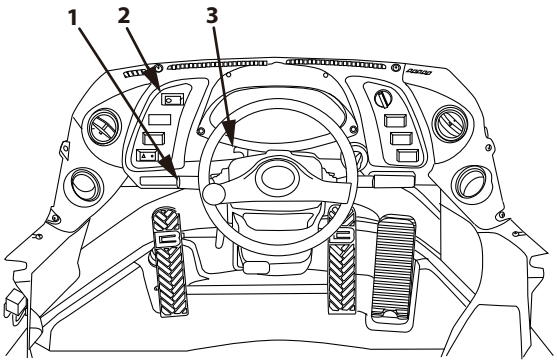

MNDB-01-001-1 ja

IMPORTANT

Do not use any brand of transmission oil other than that listed in section (7-24) of "Kinds of Oils".

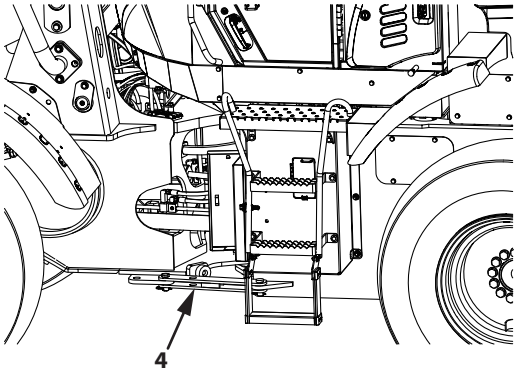

MNDF-01-026-1 ja

1. Operate the machine until the transmission oil is heated to the appropriate temperature (B).
2. Park the machine according to the instructions listed in section (7-8) of "Preparations for Inspections and Maintenance".
3. Attach articulation lock bar (4) to the front and rear frames according to the instructions listed in section.(7-11) of "Lock the Frame".

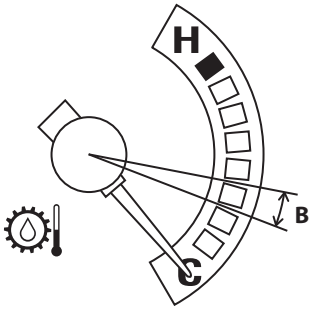

M4GB-07-158-1 ja

B: Appropriate temperature range

IMPORTANT

The machine is equipped with a turbocharged engine. Perform cool down operation before stopping the engine. Failure to do so may cause the lubricant on the turbocharger bearing surfaces to desiccate due to the intense heat present inside the turbocharger. This can possibly damage the turbocharger.

4. Turn the key switch OFF to stop the engine. Let the machine sit for 10 minutes.

5. Have a container, approximately 50 L, on hand to catch oil as it drains.

   NOTE

   Drain plug (5) is magnetized. If an excessive amount of metal pieces are sticking to drain plug, contact Authorized Dealer.

6. Remove drain plug (5) from the transmission bottom to drain the oil. Dispose of the used oil properly.
7. Securely tighten drain plug (5).

   NOTE

   Do not apply sealant to drain plug (5).

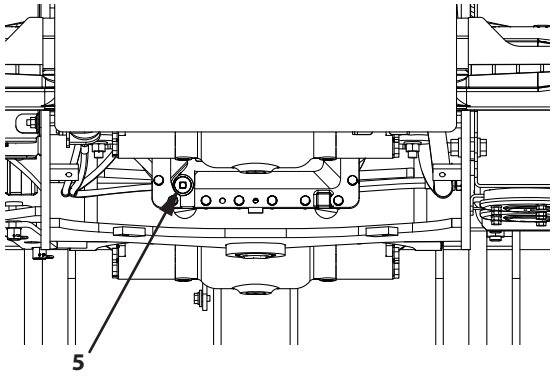

MNDF-07-006-1 ja

8. Remove mounting bolts (6) (x4) of suction tube (8).
9. Take out strainer (7). Remove debris and impurities, and clean it with a cleaning oil. If the strainer is damaged, replace it with a new one. When doing so, also replace the gasket and O-ring.
10. Install the strainer, O-ring, and gasket, and tighten mounting bolts (6) of suction tube (8).
11. Refill the specified amount of oil via transmission oil fill port (10).
    Specified oil capacity: 10 L
    Amount of oil change: 10 L
12. Start the engine and keep it running for two minutes to warm it up.
13. The oil level is fine if it is within the specified range on oil gauge (9). Add oil if it is low.

    NOTE

    Be sure not to let the O-ring become twisted or damaged during installation.
    Finally, make sure no oil is leaking from around the drain plug and strainer mounting surface.

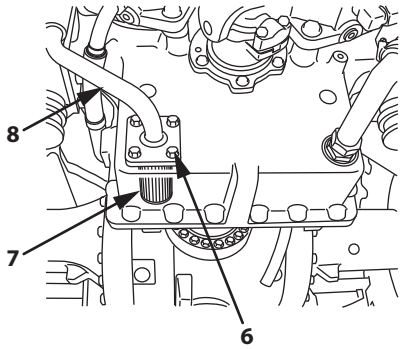

M4FC-07-021-1 ja

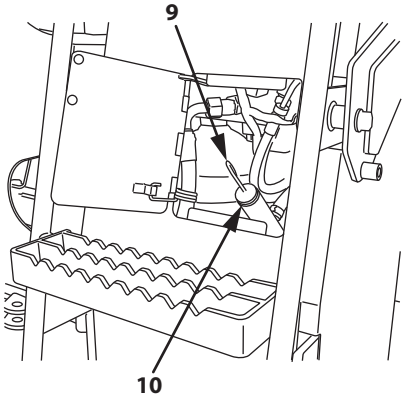

M4FC-07-019-2 ja

4 Replace the Transmission Oil Filter

--- every 500 hours

WARNING

Pay close attention to the following points.

- **Starting repair work immediately after operation may cause burns. Wait for the oil to cool before starting any maintenance work.**
- **Lock the front and rear frames with articulation lock bar (4).**

IMPORTANT

Do not use any brand of transmission oil other than that listed in section (7-24) of "Kinds of Oils".

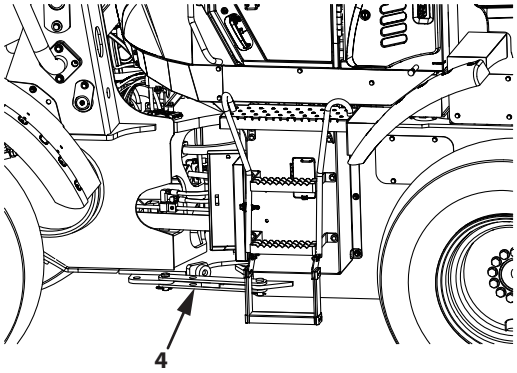

MNDF-01-026-1 ja

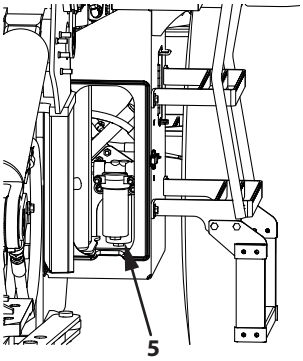

MNDF-07-007-1 ja

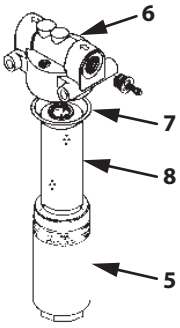

M4GB-07-050-3 ja

1. Park the machine according to the instructions listed in section (7-8) of "Preparations for Inspections and Maintenance".
2. Attach articulation lock bar (4) to the front and rear frames according to the instructions listed in section(7-11)of "Lock the Frame".
3. Remove the inspection cover behind the steps on the left side of the machine.
4. Turn the hex nut on the bottom of case (5) counterclockwise with a tool (spanner wrench) to remove case (5) from head cover (6).
5. While turning element (8), pull downward and remove it.
6. Replace O-ring (7) with a new one.
7. Fit O-ring (7) completely into the O-ring groove of head cover (6).
8. Apply clean hydraulic oil to the seal of new element (8). Then, taking care not to damage it, rotate element (8) until it fits completely into head cover (6).
9. Be sure not to let water or debris enter the filter case.
10. Install case (5) into head cover (6) and screw in the case clockwise.

NOTE

Replace the element at the specified interval. The element cleans the oil and extends the service life of the hydraulic equipment.

5 Replace Axle Oil

--- every 2000 hours

WARNING

Pay close attention to the following points.

- **Starting repair work immediately after operation may cause burns. Wait for the oil to cool before starting any maintenance work.**
- **Lock the front and rear frames with the articulation lock bar.**

IMPORTANT

Do not use any brand of axle oil other than that listed in section (7-24) of "Kinds of Oils".

Replace Axle Oil

1. Park the machine according to the instructions listed in section (7-8) of "Preparations for Inspections and Maintenance".
2. Attach articulation lock bar to the front and rear frames according to the instructions listed in section (7-11) of "Lock the Frame".
3. Clean the areas around drain plug (1) and where oil level plug is mounted.
4. Have a container, approximately 30 L, on hand to catch oil as it drains.
5. Remove drain plug (1) to drain the oil.
6. Securely tighten drain plug (1).

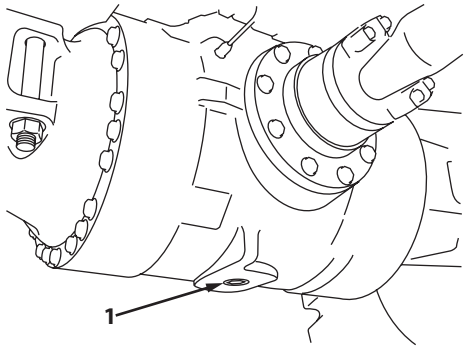

Front Axle

M4GB-07-035-1 ja

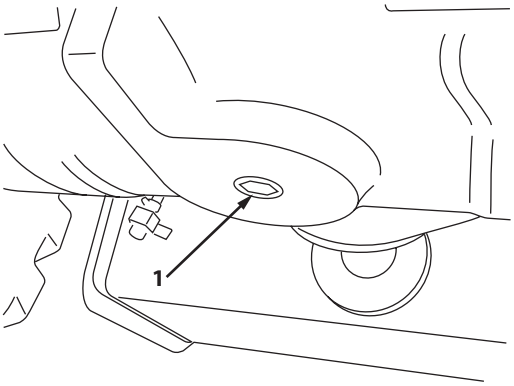

Rear Axle

M4GB-07-036-1 ja

7. Fill with the specified amount of oil via the hole of oil level plug (2).

	Front Axle	Rear Axle
ZW140-7	24 L	25 L
ZW160-7, 160PL-7	27 L	27 L

IMPORTANT

It takes time for oil to lubricate throughout the entire front axle.
After replacing the oil, install the plugs, drive the machine around for a few minutes. Then, stop the engine and check for oil leaks.

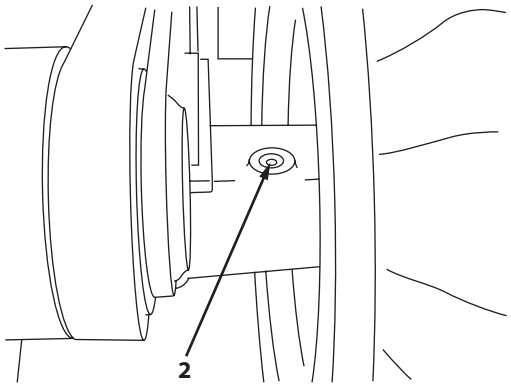

Front Axle

M4GB-07-037-1 ja

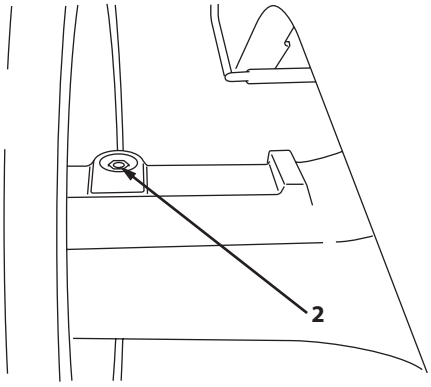

Rear Axle

M4GB-07-038-1 ja

Check Oil Level

1. Park the machine according to the instructions listed in section (7-8) of “Preparations for Inspections and Maintenance”.
2. Attach articulation lock bar (1) to the front and rear frames according to the instructions listed in section.(7-11) of “Lock the Frame”.

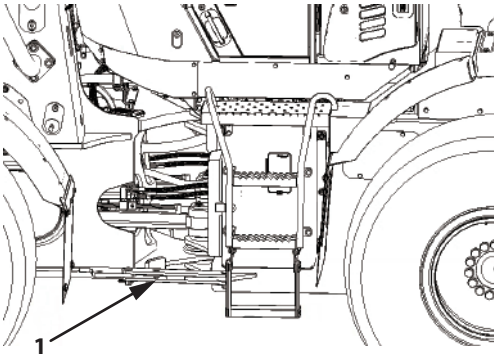

MNTL-07-021-1 ja

3. Clean the area around where oil level plug (2) is installed.
4. Remove oil level plug (2). Wipe off the tip of dipstick (3) connected to oil level plug (2) with a clean rag.

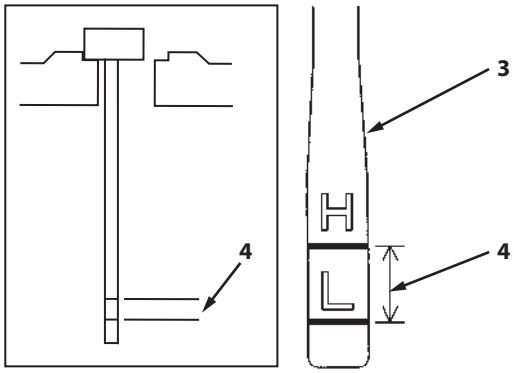

M4GB-07-039-2 ja

5. Make the plug lower surface touch the axle seat face. The oil level must be between marks H and L (4) on dipstick (3).
   Add oil if it is low.

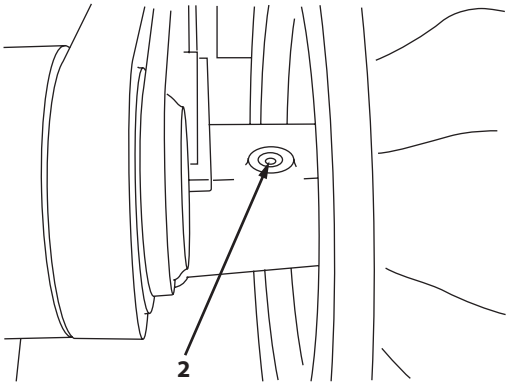

Front Axle

M4GB-07-037-1 ja

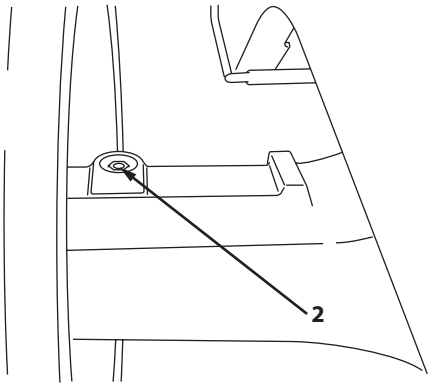

Rear Axle

M4GB-07-038-1 ja

6 Check for Oil Leaks Around the Axle and Cover

--- every 1000 hours

Check for oil leaks around the axle and cover. Check the bolt(s) where there are oil leaks and retighten the bolt(s) if loose.

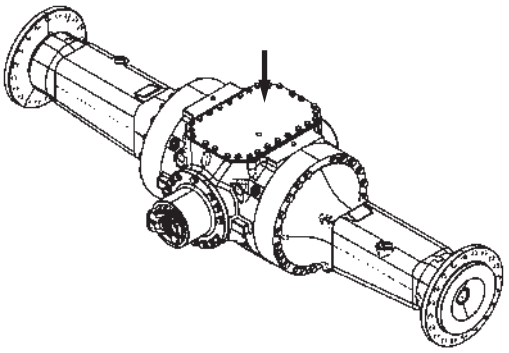

M4GB-07-159-1 ja

7 Clean the Transmission Air Breather

--- every 1000 hours

CAUTION

When cleaning with compressed air, wear safety glasses or goggles.

1. Wipe clean the area around where air breather (1) is mounted and then remove it.
2. Put a cover over where it mounts so no debris gets inside.
3. Clean air breather (1) with compressed air and if it is very dirty, wash it clean with detergent.
4. During installation, take care that no foreign matter gets inside.

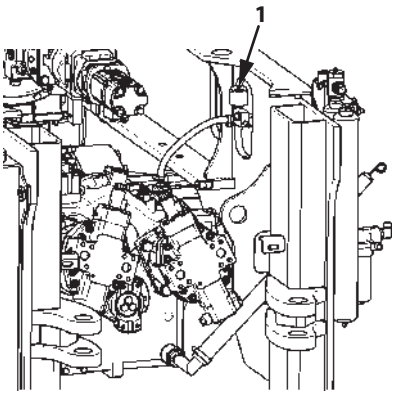

MNDF-07-057-1 ja

D. Hydraulic System

Inspection and Maintenance of Hydraulic Equipment

WARNING

When checking and/or servicing the hydraulic components, pay special attention to the following points.
The hydraulic components get extremely hot while this machine is operating. Allow the machine to cool before inspection or maintenance.

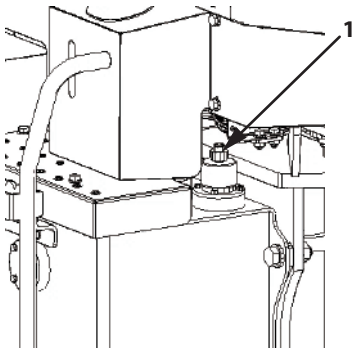

MNTL-07-022-1 ja

1. Park the machine according to the instructions listed in section (7-8) of "Preparations for Inspections and Maintenance".
2. Prior to inspecting or servicing the hydraulic system, relieve the residual pressure and allow the parts to cool.
   a. Release the residual pressure.
   b. Press air bleed valve (1) to bleed air from the hydraulic oil tank.
   c. Let the machine cool down. Be careful as servicing hot and high-pressure hydraulic components may cause plugs, screws and/or oil to fly off or escape suddenly, potentially resulting in personal injury.
   Keep body parts and your face away from the front of plugs or screws when loosening them. Remove them after residual pressure is gone. Hydraulic components may be pressurized even when cooled.
   Do not inspect or service hydraulic components on a slope. The hydraulic equipment will be under high pressure due to the machine's own weight.

IMPORTANT

- **When attaching hydraulic hoses and pipes, be sure not to scratch or get foreign matter on the joint faces of hydraulic parts.**
- **Wash hoses, pipes, and the hydraulic oil tank area with a washing liquid and thoroughly wipe off before reconnecting.**
- **Use O-rings that are not scratched or deformed. Take care not to scratch them during assembly.**
- **Do not allow high pressure hoses to twist when connecting them. The life of twisted hoses will be shortened considerably.**
- **Be sure not to overtighten the clamps of low pressure hoses.**
- **When adding hydraulic oil, use the same brand of hydraulic oil. Do not use a mixture of different brands of hydraulic oils. When shipped from the factory, the machine uses genuine Hitachi Construction Machinery hydraulic oil EX46HN. Always use the same oil. To use a different brand, replace all of the hydraulic oil.**
- **Do not use any brand of hydraulic oil other than that listed in section (7-25) of "Kinds of Oils".**
- **Never run the engine without oil in the hydraulic oil tank.**

1 Check Oil Level of Hydraulic Oil Tank

--- every 10 hours

IMPORTANT

If the oil level is not visible in the level gauge, immediately refill it to the proper hydraulic oil level. Using it as-is will cause serious damage to the hydraulic system.
If the oil level as seen from the level gauge is too high, use a pump to remove some to the proper level.

1. Park the machine according to the instructions listed in section (7-8) of "Preparations for Inspections and Maintenance".
2. Attach articulation lock bar to the front and rear frames according to the instructions listed in section (7-11) of "Lock the Frame".
3. Check oil level with level gauge (1) on hydraulic oil tank. The amount is correct if it is in the middle of the gauge. Add oil if the oil level is low.

   NOTE

   When the weather is cold, refer to the section "Warm Up Operation" in the chapter "Operating and Stopping the Engine", and warm up the hydraulic oil before checking its level.

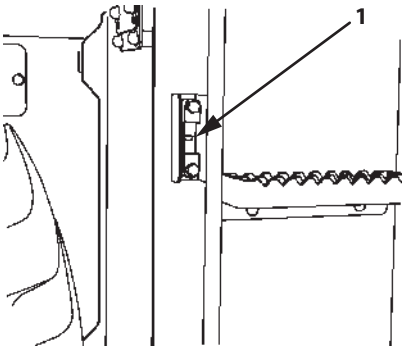

M4FC-07-026-1 ja

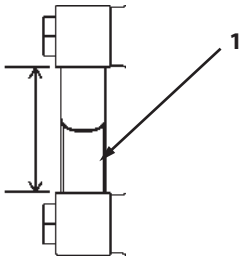

M4GB-07-160-1 ja

2 Replace Hydraulic Oil/Clean Hydraulic Oil Tank

--- every 2000 hours

Replacing and Cleaning

WARNING

The hydraulic oil gets hot and is under high pressure during operation of the machine. Severe burns may result if skin comes in contact with the hot, escaping hydraulic oil just after operation. Wait for the oil to cool before starting any maintenance work.

IMPORTANT

Do not use any brand of hydraulic oil other than that listed in section (7-25) of "Kinds of Oils".

1. Park the machine according to the instructions listed in section (7-8) of "Preparations for Inspections and Maintenance".
2. Attach articulation lock bar (1) to the front and rear frames according to the instructions listed in section.(7-11) of "Lock the Frame".
3. Before replacing the hydraulic oil, press air bleed valve (2) to bleed the air inside the hydraulic oil tank.

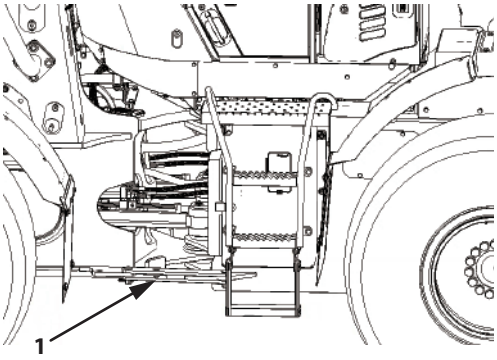

MNTL-07-021-1 ja

IMPORTANT

Take care when changing the hydraulic oil that nothing, such as water or sand, gets inside the tank.

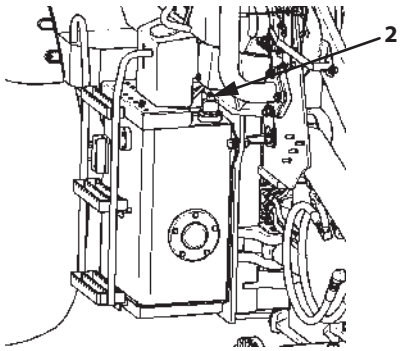

MNDF-07-010-4 ja

4. Remove cover (3) of filler port. Have a 120 L container on hand. Remove drain plug (8) and drain the hydraulic oil. Put a cover over the filler port so no debris gets inside.
5. Remove tank bottom covers (7) (x2). Pull down suction filter (9) to remove it.
   Wash the tank bottom with a cleaning oil. Reinstall the cover in its original position after cleaning.

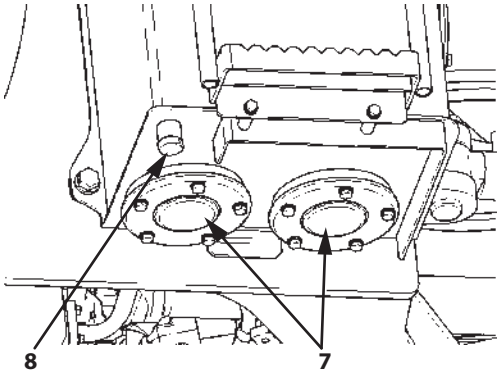

MNDF-07-011-1 ja

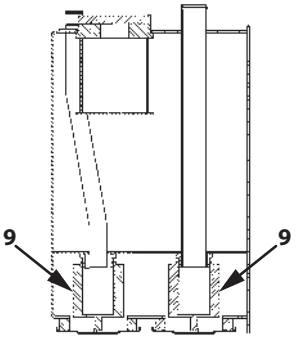

M4FC-07-029-1 ja

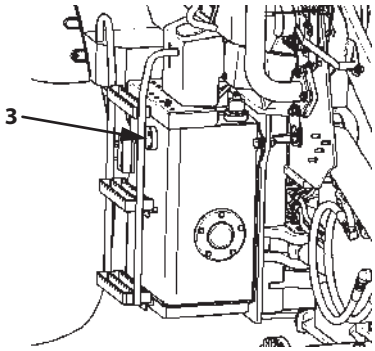

MNDF-07-010-2 ja

6. Use level gauge (10) to monitor the oil level while filling through cover (3) on top of the hydraulic oil tank.
   Hydraulic oil tank oil level (Hydraulic oil capacity): 96L (150L)
7. Install cover (3) with bolts (x4).
   Tightening Torque: 5 N·m (0.5 kgf·m)

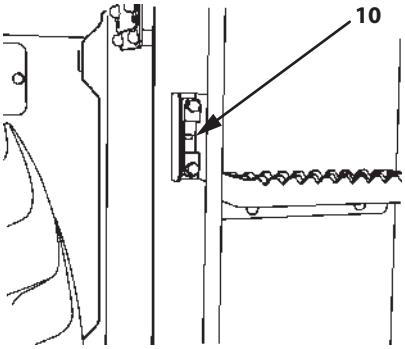

M4FC-07-026-3 ja

IMPORTANT

Take care when changing the hydraulic oil that nothing, such as water or sand gets inside the tank.

8. Start the engine. Slowly and gently move the lift arm up and down, and tilt the bucket forward and backward. Stop the engine and check for oil leaks. Use level gauge (10) to check the amount of oil.

Bleed Air from the Hydraulic System

After changing the hydraulic oil, return filter, pilot filter and suction filter, bleed air from the hydraulic system by following the procedures below.

Bleeding Air From Hydraulic Circuits

1. After filling with oil, start the engine and operate the bucket and lift cylinders several times each to bleed air. Do not operate the cylinders full stroke to their ends.
2. Set the bucket down level on the ground and return to the position for checking hydraulic oil level.
3. Stop the engine. Check hydraulic oil level and add if necessary.

3 Suction Filter Cleaning

--- each time hydraulic oil is changed

Suction filters (x2) are mounted at the bottom of the hydraulic oil tank.

Clean the suction filter when changing hydraulic oil.

1. After removing hydraulic oil from the hydraulic oil tank, remove cover (2), and pull up filter (3) to remove it.
   When pulling up suction filter (3), do so gently. Dirt it has trapped will fall off.
2. Clean the inside of the tank and suction filter (3) with a cleaning oil.
3. Make sure pipe (5) is securely inserted before installing suction filter (3).
4. Before installing cover (2), make sure that bolt (4) at the end of the suction filter (3) is tightened, and then install cover (2) and bolts.
   Tightening Torque: 50 N·m (5.0 kgf·cm)
5. Use oil gauge (6) to monitor the level while filling the tank via the filler port (1) with the specified amount of oil.
6. Start the engine. Slowly and gently move the arm up and down, and tilt the bucket forward and backward. Make sure nothing is abnormal. Stop the engine and use oil gauge (6) to check the amount of oil.

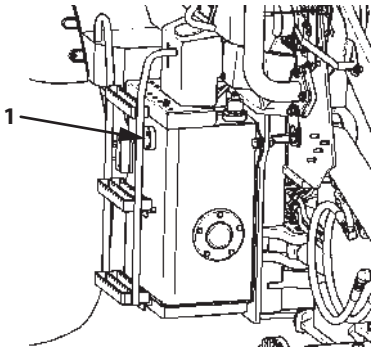

MNDF-07-010-3 ja

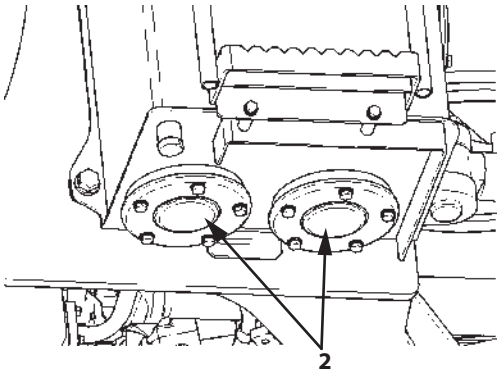

MNDF-07-011-2 ja

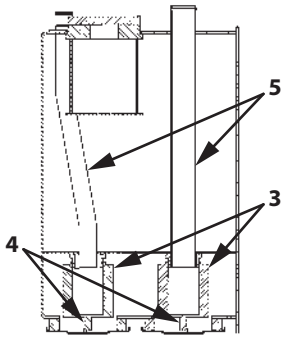

M4FC-07-029-2 ja

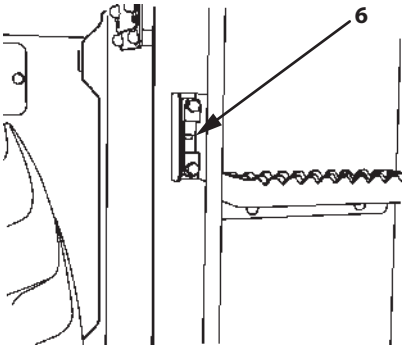

M4FC-07-026-2 ja

4 Replace Pilot Filter

--- every 2000 hours

Replacement Procedure

WARNING

The hydraulic oil gets hot and is under high pressure during operation of the machine. Severe burns may result if skin comes in contact with the hot, escaping hydraulic oil just after operation. Wait for the oil to cool before starting any maintenance work.

1. Park the machine according to the instructions listed in section (7-8) of "Preparations for Inspections and Maintenance".
2. Attach articulation lock bar to the front and rear frames according to the instructions listed in section (7-11) of "Lock the Frame".
3. Before replacing the filter element, bleed off air from the hydraulic oil tank by pushing air bleed valve (1) on the hydraulic oil tank.
4. Turn the hex nut on the bottom of case (2) counterclockwise with a tool (spanner wrench) to remove case (2) from head cover (3).
5. While turning element (5), pull downward and remove it.
6. Replace O-ring (4) and backup ring (6) with new ones.
7. Insert O-ring (4) and backup ring (6) into the O-ring groove of case (2).
8. Apply clean hydraulic oil to the seal of new element (5). Then, taking care not to damage it, rotate element (5) until it fits into head cover (3).

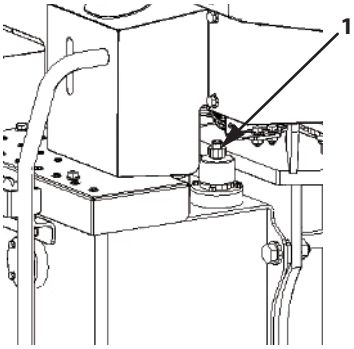

MNTL-07-022-1 ja

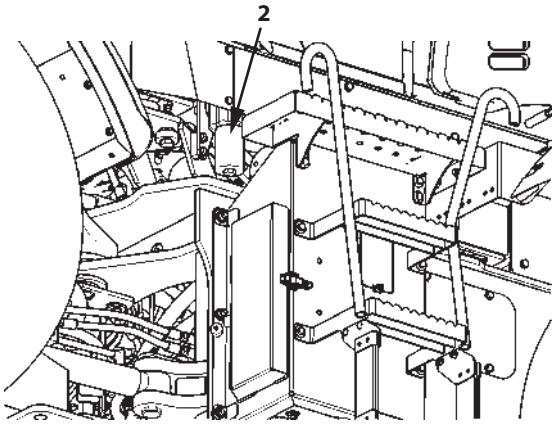

MNDF-07-012-1 ja

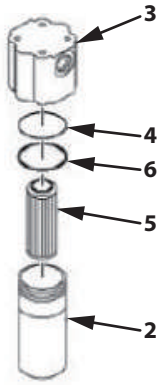

70MPD8-07-01-1 ja

9. Be sure not to let water or debris enter the filter case.
10. Install case (2) into head cover (3) while rotating the case clockwise.
    Tightening Torque: 20 to 30 N·m (2.0 to 3.0 kgf·m)
11. Bleed air from the pump and check the oil level of the hydraulic oil tank after replacing element.
    (2 Refer to the section (7-57) of "Bleed Air from the Hydraulic System".)
    If the machine is operated with air mixed in the hydraulic system, damage to the pump will result.

70MPD8-07-01-2 ja

NOTE

Replace the element at the specified interval. The element cleans the hydraulic oil and extends the life of hydraulic equipment.

5 Replace Hydraulic Oil Tank Return Filter

--- every 1000 hours

Replacement Procedure

WARNING

Hydraulic oil is hot and under high-pressure during operation.
Severe burns may result if skin comes in contact with the hot, escaping hydraulic oil just after operation.
Wait for the oil to cool before starting any maintenance work.
Be very careful when removing the filter as any remaining oil in the filter may spill out.

1. Park the machine according to the instructions listed in section (7-8) of “Preparations for Inspections and Maintenance”.
2. Attach articulation lock bar to the front and rear frames according to the instructions listed in section (7-11) of “Lock the Frame”.
3. Remove washer tank cover (2) and deck plate (3).
4. Press air bleed valve (1) on the hydraulic oil tank to bleed air from the hydraulic oil tank.

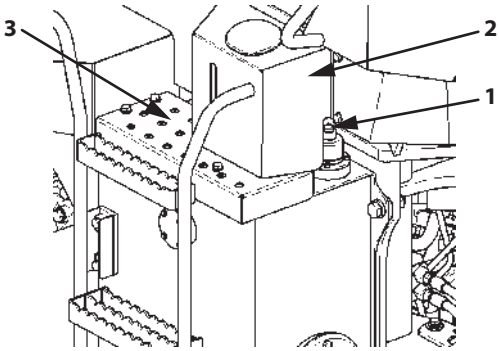

MNDF-07-013-1 ja

5. Wipe clean the area around cover (4).
6. Have a tray and rags ready to catch spilled oil and the element.
7. Loosen bolts (5) (x6) to remove cover (4) and O-ring (6).
   When removing cover (4), slowly remove cover (4) while pressing it downward so that spring (7) does not fly off.
8. Remove spring (7), valve (8) and element (9).
9. Replace element (9) and O-ring (6) with new ones, and install them in the hydraulic oil tank.
   Before installing new element (9), check that there is an O-ring (6).
10. Install cover (4) with bolts (4) (x6).
    Tightening Torque: 50 N·m (5.0 kgf·m)
11. Bleed air from the pump and check the oil level of the hydraulic oil tank after replacing element.
    (2 Refer to the section (7-57) of "Bleed Air from the Hydraulic System".)
    If the machine is operated with air mixed in the hydraulic system, damage to the pump will result.

NOTE

Replace the element at regular intervals to keep hydraulic oil clean and to extend the service life of the hydraulic components.

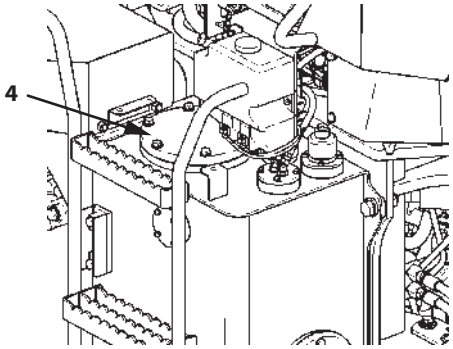

MNDF-07-014-1 ja

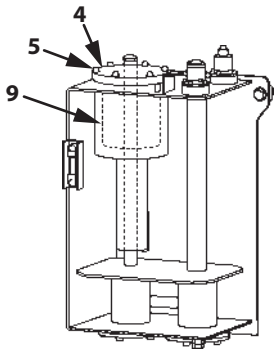

M4FC-07-031-1 ja

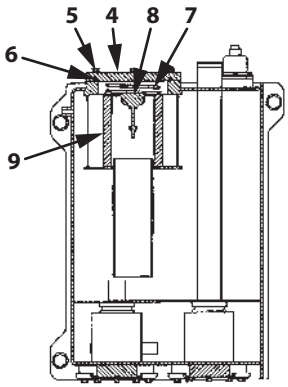

M4FC-07-032-1 ja

6 Replace HST Charge Filter Element

--- every 500 hours

Replacement Procedure

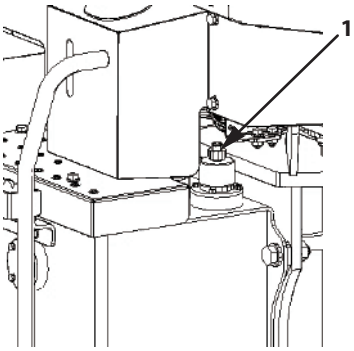

MNTL-07-022-1 ja

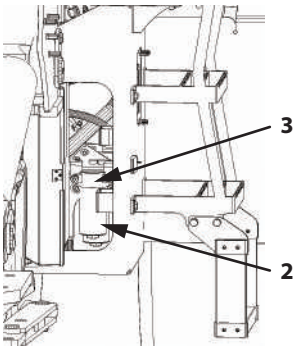

MNTL-07-027-2 ja

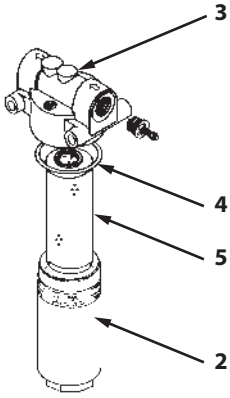

M4GB-07-050-1 ja

WARNING

The hydraulic oil gets hot and is under high pressure during operation of the machine. Severe burns may result if skin comes in contact with the hot, escaping hydraulic oil just after operation. Wait for the oil to cool before starting any maintenance work.

1. Park the machine according to the instructions listed in section (7-8) of "Preparations for Inspections and Maintenance".
2. Attach articulation lock bar to the front and rear frames according to the instructions listed in section (7-11) of "Lock the Frame".
3. Press air bleed valve (1) on the hydraulic oil tank and bleed air from the hydraulic oil tank.
4. Open the cover behind the steps on the left side of the machine.
5. Turn the hex nut on the bottom of case (2) counterclockwise with a tool (spanner wrench) to remove case (2) from head cover (3).
6. While turning element (5), pull downward and remove it.
7. Replace O-ring (4) with a new one.
8. Fit O-ring (4) securely into the O-ring groove of head cover (3).
9. Apply clean hydraulic oil to the seal of new element (5). Then, taking care not to damage it, rotate element (5) until it fits securely into head cover (3).
10. Be sure not to let water or debris enter the filter case.
11. Install case (2) into head cover (3) while rotating the case clockwise.
    Tightening Torque: 39 N·m (3.9 kgf·m)
12. Bleed air from the pump and check the oil level of the hydraulic oil tank after replacing element.
    (2 Refer to the section (7-57) of "Bleed Air from the Hydraulic System".)
    If the machine is operated with air mixed in the hydraulic system, damage to the pump will result.

NOTE

Replace the element at regular intervals to keep the hydraulic oil clean and to extend the service life of hydraulic components.

7 Replace Air Breather Element

--- every 2000 hours

CAUTION

Hydraulic oil is hot and under high-pressure during operation.
Severe burns may result if skin comes in contact with the hot, escaping hydraulic oil just after operation.
Wait for the oil to cool before starting any maintenance work.

Replacement Procedure

1. Park the machine according to the instructions listed in section (7-8) of "Preparations for Inspections and Maintenance".
2. Attach articulation lock bar to the front and rear frames according to the instructions listed in section (7-11) of "Lock the Frame".
3. Before replacing the element, be sure to bleed air pressure from the hydraulic oil tank by pushing air bleed valve (1) on the hydraulic oil tank.
4. Turn cover (3) clockwise approx. 1/4 turn. Remove cap (2) by turning it counterclockwise.
5. Turn cover (3) counterclockwise and remove it. Remove element (4).
6. Install new element (4). Tighten cover (3) by turning it clockwise until it comes in contact with the element. Then, further tighten it 1/4 turn.
7. Securely tighten cap (2) clockwise by hand. While holding cap (2) by hand so that it does not turn, securely tighten cover (3) by turning counterclockwise 5 to 10 ° by hand.
8. Take care never to allow water and/or debris to stay between cover (3) and body (5) (air breathing port).

NOTE

Replace the element at regular intervals to keep the hydraulic oil clean and to extend the service life of hydraulic components.

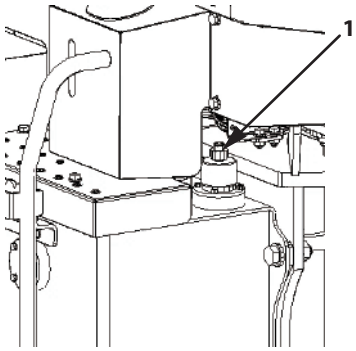

MNTL-07-022-1 ja

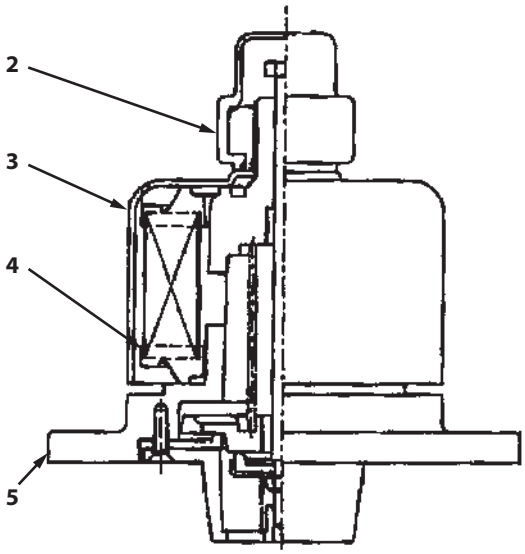

M4GB-07-166-1 ja

8 Check the Pilot Accumulator for Function, Gas Leakage, Looseness and Damage

--- every 2000 hours

WARNING

- **The accumulator may only be handled by someone certified.**
- **The accumulator contains high-pressure nitrogen gas. Practicing caution is essential to prevent fires from occurring.**
- **Never strike the accumulator or have flame close to it.**
- **Do not apply direct heat to the accumulator or weld it.**
- **Relieve the pressure before performing maintenance on the pipe lines.**

1. Park the machine according to the instructions listed in section (7-8) of “Preparations for Inspections and Maintenance”.
2. Attach articulation lock bar to the front and rear frames according to the instructions listed in section (7-11) of “Lock the Frame”.
3. Raise the lift arm all the way up and place the lift arm control lever in NEUTRAL (N) position.
4. Turn the key switch to OFF to stop the engine.
5. Turn the key switch the ON position. The engine will not start at this time.
6. Do a safety check around the machine.
7. Within 2 minutes after stopping the engine, put the lift arm control lever in the FLOAT (C) position and lower the bucket to 1 m above the ground.
8. Put the lift arm control lever in the LIFT ARM DOWN (B) position and lower the bucket to the ground.
9. Make sure the lift arm does not stop midway. If the lift arm stops midway, functionality of the accumulator may be compromised. Contact Authorized Dealer for repairs.

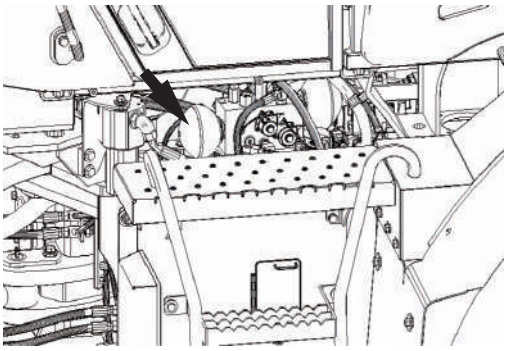

MNTL-07-028-1 ja

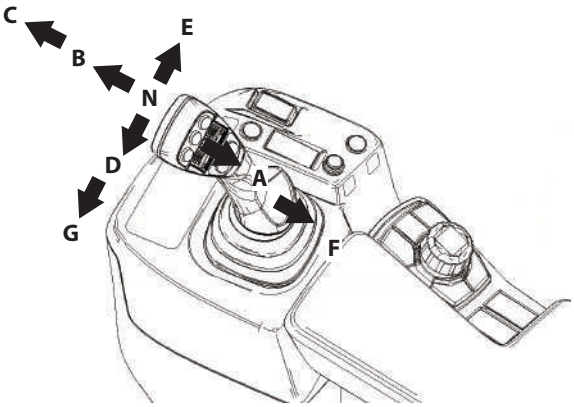

MNTL-07-012-3 ja

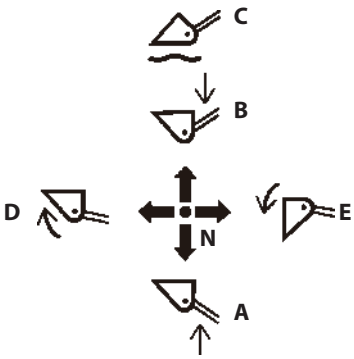

M4GB-01-074-1 ja

9 Replace Pilot Accumulator

--- every 4000 hours or every 2 years

Contact Authorized Dealer to have the accumulator replaced.

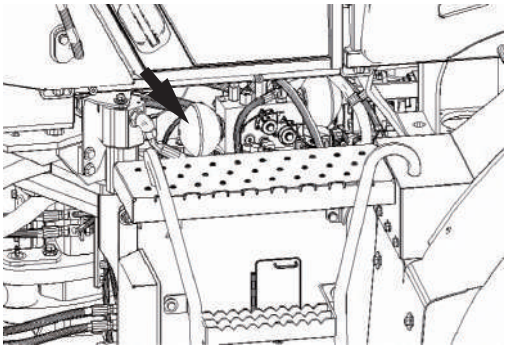

MNTL-07-028-1 ja

10 Check the Ride Control Accumulator for Function, Gas Leakage, Looseness and Damage

--- every 500 hours

WARNING

- **The accumulator may only be handled by someone certified.**
- **The accumulator contains high-pressure nitrogen gas. Practicing caution is essential to prevent fires from occurring.**
- **Never strike the accumulator or have flame close to it.**
- **Do not apply direct heat to the accumulator or weld it.**
- **Relieve the pressure before performing maintenance on the pipe lines.**

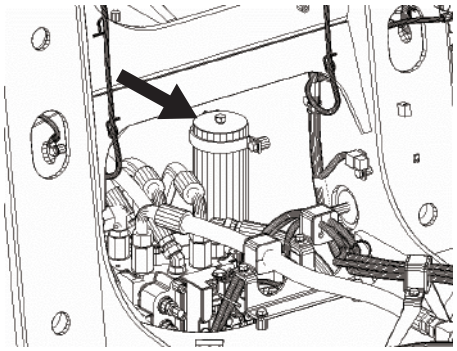

MNTL-07-029-1 ja

Drive with the ride control switch AUTO and OFF, then compare the up/down vibrations while traveling. Drive at least as fast as the speed set for ride control on the multi-function monitor. If the vibrations are not dampened with ride control operating, functionality of the accumulator may be compromised. Contact Authorized Dealer to have it inspected.

11 Check Gas Pressure in Ride Control Accumulator

--- every 2000 hours

Check the gas pressure at the specified interval. When checking is required, consult Authorized Dealer.

12 Check Gas Pressure in Steering Accumulator

--- every 2000 hours

Check the gas pressure at the specified interval. Check the gas pressure if the machine vibrates and turning is not smooth when the steering wheel is operated.
When checking is required, contact Authorized Dealer.

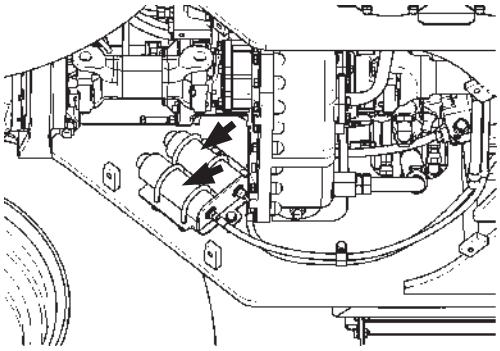

MNDF-07-017-1 ja

13 Check Hoses and Lines

--- every 10 hours/250 hours

WARNING

Escaping oil under high-pressure can penetrate the skin causing serious injury. To avoid this hazard, use a piece of cardboard when searching for high pressure oil leaks. Take care to protect hands and body from high-pressure fluids. If a fluid penetrates the skin, immediately get treatment from a doctor familiar with how to treat such an injury.
If any kind of liquid penetrates the skin, it must be surgically removed within several hours or gangrene may set in.

SA-031 ja

WARNING

Hydraulic oil or lubricant leaks may cause a fire leading to serious damage.
Pay attention to the following points to avoid such risks.

- **Park the machine on hard, level ground. Lower the bucket to the ground and stop the engine. Remove the key from the key switch and put the control lever pilot shut-off switch in the LOCK "🔒" position.**
- **Check for missing or loose clamps, and whether hoses are kinked or rubbing against each other. Check for damage to the oil cooler, for loose flange bolts on the oil cooler, and for leaks. Check whether there are any places on hoses, pipes and the oil cooler that oil leaks or damage is likely to occur in the future. If anything abnormal is found, replace or retighten parts as per the table on the next page.**

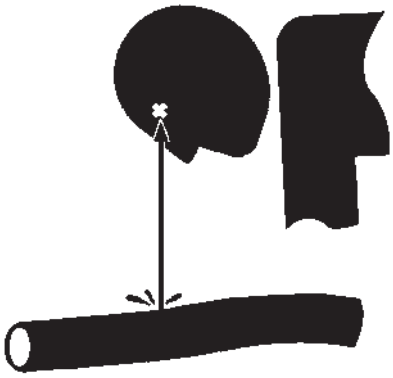

SA-292 ja

SA-044 ja

- **Retighten, repair or replace missing, loose or damaged clamps, hoses, pipes or oil cooler and loose oil cooler flange bolts. Do not bend or strike any high pressure lines.**

Hose

Interval (Hours)	Check Points	Check For	Remedies	
Every 10 hours	Hose covers	Leak (1)	Replace	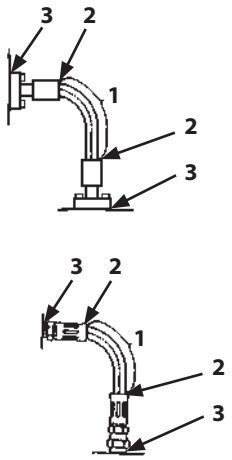
	Hose ends	Leak (2)	Replace	
	Hose Fittings	Leak (3)	Retighten or replace hose or O-ring	
Every 250 hours	Hose covers	Leak (4)	Replace	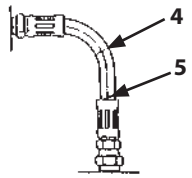
	Hose ends	Leak (5)	Replace	
	Hose covers	Exposed reinforcement (6)	Replace	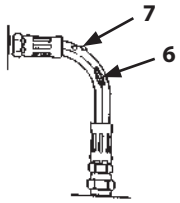
	Hose covers	Crack or blister (7)	Replace	
	Hose	Bend (8), Collapse (9)	Replace	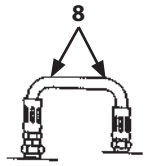
	Hose ends and fittings	Deformation or corrosion (10)	Replace	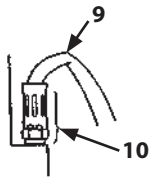 Fig.1

Interval (Hours)	Check Points	Check For	Remedies	
Daily	Contact surfaces of flange joints	Leak (11)	Replace	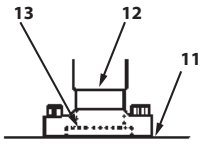
	Bolts	Loose or leak (11)	Retighten or replace O-ring	
	Welded surfaces on flange joints	Leak (12)	Replace	
Every 250 hours	Flange joint neck	Crack (13)	Replace	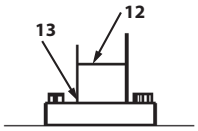 Fig.2
	Welded surfaces on flange joints	Crack (12)	Replace	
	Clamps	Missing, deformed or loose bolts	Replace or retighten	

Types of Hydraulic Fittings

Two hydraulic fitting designs are used on this machine.

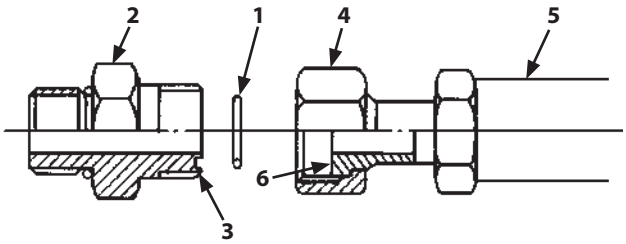

M104-07-033-3 ja

1. Flat Face O-ring Seal Fitting (ORS Fitting)

O-ring (1) is used on the sealing surface of adapter (2) to prevent oil leakage from the fitting.

Precautions for Use

1. Check seat face (6). Make sure there is no grime or damage on the seat face.
2. Replace the O-ring with a new one when assembling fittings.
3. Apply grease to O-ring (1) and fit it into O-ring groove (3) so it will not come out.
4. Once O-ring (1) is properly seated, press the fitting together while tightening adapter (2) by hand.
5. Tighten adapter (2) and union (4) to the tightening torques shown in the table below. Do not allow hose (5) to twist during tightening.
6. Check for oil leaks. If an oil leak from the fitting is found, do not tighten adapter (2) further. Open the fitting and replace the O-ring. Before tightening the fitting again, make sure the O-ring is seated in the correct place.

   Tightening Torque

   Tighten fittings to the tightening torques shown below.

Wrench size (mm)		27	36	41	50
Tightening Torque	N·m (kgf·m)	95 (9.5)	180 (18.0)	210 (21.0)	350 (35.0)

2. Metal Face Seal Fittings

Metal face seal fittings are used on small diameter hoses and consist of an adapter seat face (9) and a hose seat face (10).

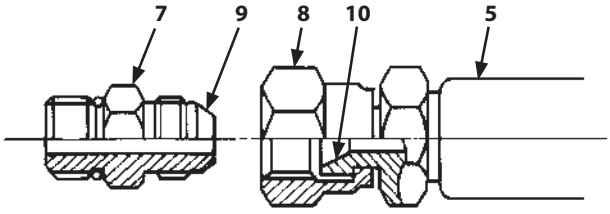

M202-07-051-1 ja

1. After adjusting, tighten adapter (7) by hand.
2. Tighten adapter (7) and nut (8) to the tightening torques shown in the table below. Do not allow hose (5) to twist.

   Tightening Torque

   Tighten fittings to the tightening torques shown below.

Wrench size (mm)		17	19	22	27	36
Tightening Torque	N·m (kgf·m)	25 (2.5)	30 (3.0)	40 (4.0)	80 (8.0)	180 (18.0)

E. Fuel System

1 Amount of Fuel in the Tank

--- every 10 hours

DANGER

Fire Warning
Fuel is flammable. Keep fuel away from fire hazards.

IMPORTANT

Use the specified diesel in the fuel tank. Using any other fuel will cause engine problems and make the engine difficult to start.

Specified Fuel

Use only ultra-low-sulfur diesel with a sulfur limit of 15 ppm or low-sulfur diesel (JISK-2204) (ASTM D-975) (EN-590).
Adding or mixing poor quality fuel, fuel system cleaners, alternative fuel additives, gasoline, kerosene or alcohol-based fuel with the specified fuel may deteriorate performance of fuel filters, and cause sliding problems at lubricated contacts in the injector.
Using fuel other than ultra-low-sulfur or low-sulfur diesel fuel has adverse effects on the engine and the aftertreatment device, which may result in malfunction.

Refueling

1. Park the machine according to the instructions listed in section (7-8) of "Preparations for Inspections and Maintenance".

IMPORTANT

The turbocharger may be damaged if the engine is not stopped correctly.

DANGER

Handle fuel carefully. Stop the engine before refueling. Never smoke while refueling the fuel tank or doing fuel-related work.

2. Check fuel gauge (1). If the fuel is low, add fuel.
3. Remove cap (2) of filler port.
   "Filler port cap unlock procedures"

- Release the key lock.
- Pull up handle (3) and turn it counterclockwise to release cap lock.
- Remove cap (2).

IMPORTANT

Keep dust, dirt, water and other foreign matter out of the fuel system.

NOTE

The fuel filler port is on the left rear of the machine.

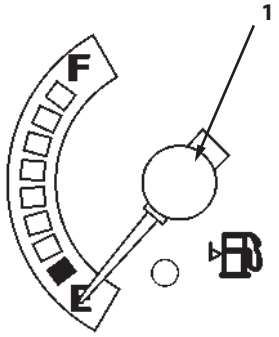

MNEC-01-002-2 ja

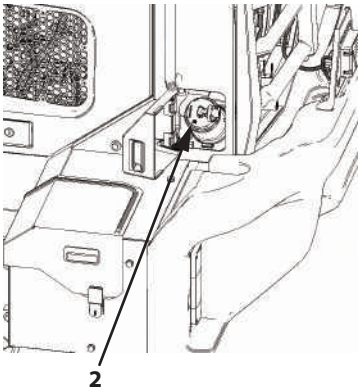

MNTL-07-030-1 ja

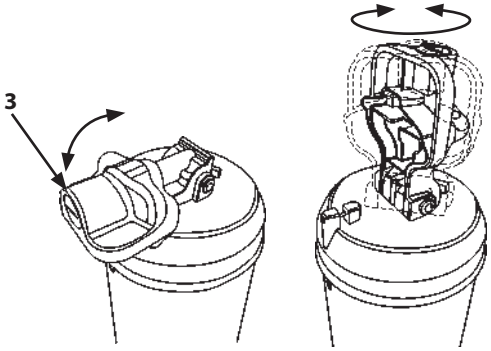

MLBA-07-093-MLBA-07-095 ja

4. To avoid condensation, be sure to fill the tank at the end of each workday. The tank capacity is as follows.
   Do not fill the tank more than needed. Use the float on level gauge (4) to check the level. Stop filling when red mark (5) on the float becomes visible. Position the oil filler gun so that the gun will not obstruct the floating movement of level gauge (4).
   Fuel tank capacity: 205 L
5. Just after fueling, install and lock cap (2) on the top of the fuel tank to prevent tampering and loss.
6. Install cap (2) of filler port.
   "Filler port cap lock procedure"

- Install cap (2).
- Turn handle (3) clockwise until the cap is locked, and push down the handle.
- Lock the key.

IMPORTANT

Wipe clean any fuel that has overflowed.

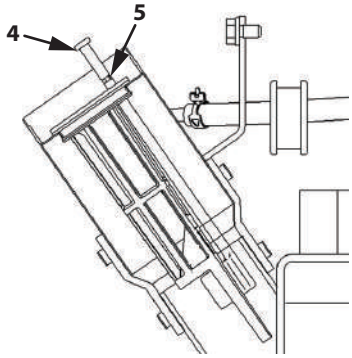

MNTK-07-036-1 ja

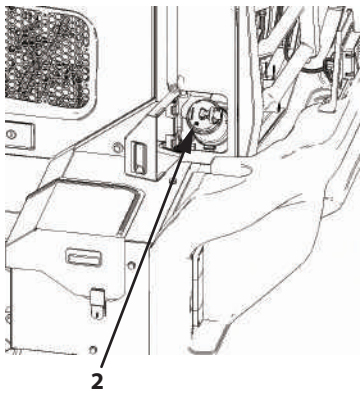

MNTL-07-030-1 ja

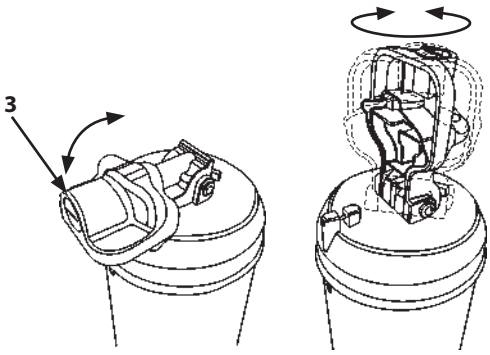

MLBA-07-093-MLBA-07-095 ja

2 Drain Fuel Tank of Water and Sediment

--- every 1000 hours

Before starting work, remove plug (2) from the tip of drain valve (1) on the fuel tank bottom and open drain valve (1) to drain off water and sediment.
Plug (2) is installed to protect drain valve (1) from tampering.

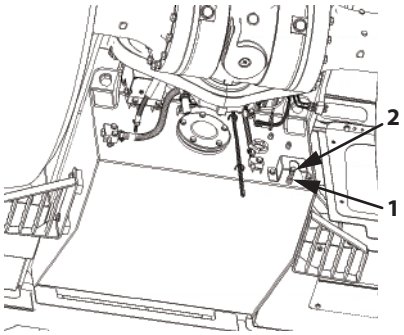

MNTL-07-031-1 ja

3 Drain Fuel Filter of Water

--- daily check (before starting work)

IMPORTANT

Drain the fuel filter daily (before starting work). The engine may be damaged if the fuel pre-filter is not drained daily.

Fuel pre-filter (A) is a device that separates water mixed into the fuel, and drains the water away. If an engine error alarm is flashing, drain the water.

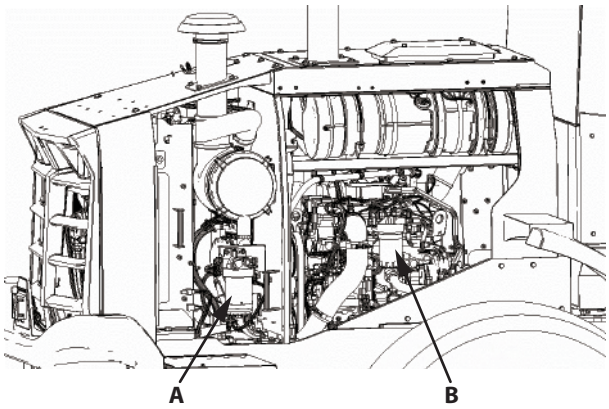

MNTL-07-032-1 ja

A: Pre-filter B: Main filter

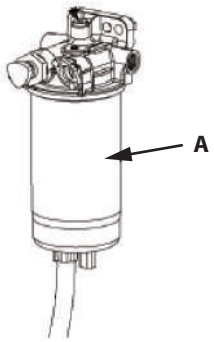

MNTL-07-066-1 ja

Draining Procedure

1. Connect black drain hose (5) located in the tool box to drain plug (3) under fuel pre-filter (1) and the case.
2. Loosen drain plug (3) to drain off water that has collected inside.
   To ensure safety, use a container to catch the water.
3. After draining off the water, tighten plug (3).

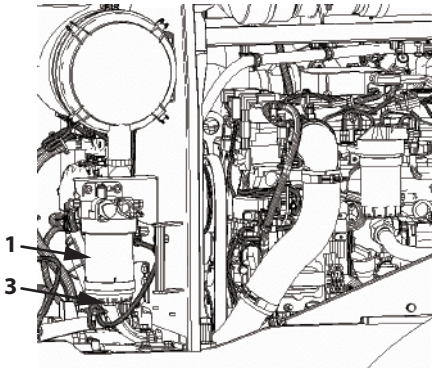

MNTL-07-033-4 ja

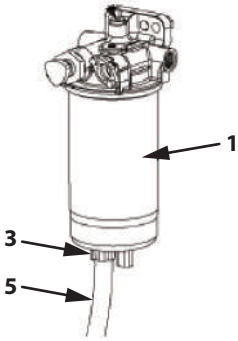

MNTL-07-066-2 ja

Bleeding Air from the Fuel System

IMPORTANT

Air in the fuel system may make the engine hard to start or run irregularly.
After draining water from the fuel filter or fuel pre-filter (1), replacing the fuel pre-filter element, or running the fuel tank "dry", be sure to "bleed the air" from the fuel system.
If the fuel contains high water content, check the fuel filter earlier than the normal interval and drain water from it.

1. Loosen air bleed plug (4), push feed pump (2) until no air bubbles are observed in the fuel from the air bleed plug.
2. After air bubble-free fuel is spouted from air bleed plug (4), tighten the air bleed plug and push the feed pump until it becomes difficult to move.
3. Once the feed pump becomes difficult to move, push the disk part of feed pump (2) back to the original position.
4. Start the engine. Check the fuel supply system for fuel leaks.

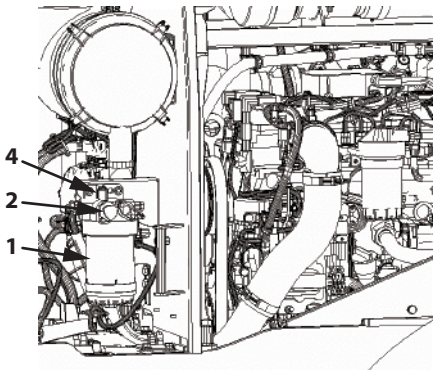

MNTL-07-033-5 ja

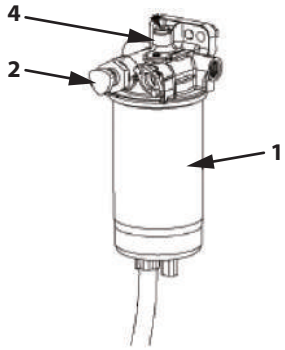

MNTL-07-066-3 ja

4 Replace Main Fuel Filter Element

--- every 1000 hours

IMPORTANT

- **Use genuine Hitachi Construction Machinery elements for the fuel main filter element and the pre-filter element. Using a different element may adversely affect engine performance and/or shorten the engine service life. Note: any engine failure caused by using other manufacturers' elements is excluded from the Hitachi Construction Machinery Warranty Policy.**
- **Take care not to allow dirt and/or water to enter the fuel tank.**

Replacement Procedure

1. Remove cartridge filter (2) from fuel filter (1) using a filter wrench.
   To ensure safety and to avoid contaminating the ground, use a container to catch the fuel.
2. Apply a thin layer of fuel to the gasket face of new cartridge filter element (2).
3. When installing cartridge filter element (2), hand tighten gently it until the gasket touches the seal.
4. From that point, further tighten the cartridge filter 1/4 to 1/2 turn using the filter wrench.
   Take care not to overtighten cartridge filter (2) as doing so will deform it.
5. Bleeding Air from the Fuel System
   After replacing the fuel filter element, bleed “air” from the fuel supply system.
   (3 Refer to the section (7-79) of “Bleeding Air from the Fuel System”.)

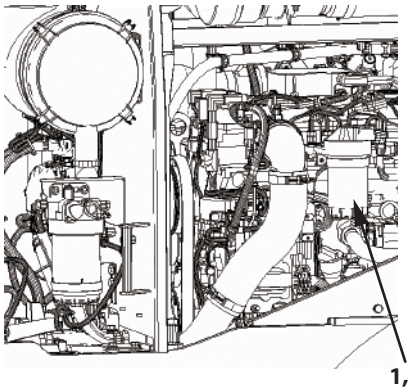

MNTL-07-033-2 ja

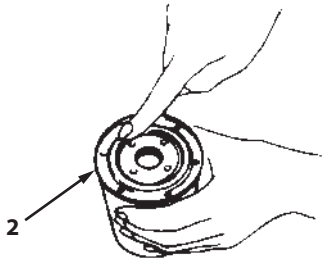

M4GB-07-066-1 ja

5 Replace Fuel Pre-Filter Element

--- every 1000 hours

IMPORTANT

- **Use genuine Hitachi Construction Machinery elements for the fuel main filter element and the pre-filter element. Using a different element may adversely affect engine performance and/or shorten the engine service life. Note: any engine failure caused by using other manufacturers' elements is excluded from the Hitachi Construction Machinery Warranty Policy.**
- **Take care not to allow dirt and/or water to enter the fuel tank.**

Replacement Procedure

1. Remove cartridge filter (1) from fuel using a filter wrench.
   To ensure safety and to avoid contaminating the ground, use a container to catch the fuel.
2. Apply a thin layer of fuel to the gasket face of new cartridge filter element (2).
3. When installing cartridge filter element (2), hand tighten gently it until the gasket touches the seal.
4. From that point, further tighten the cartridge filter 1/4 to 1/2 turn using the filter wrench.
   Take care not to overtighten cartridge filter (1) as doing so will deform it.
5. Bleeding Air from the Fuel System
   After replacing the pre-fuel filter element, bleed "air" from the fuel supply system.
   (3 Refer to the section (7-79) of "Bleeding Air from the Fuel System".)

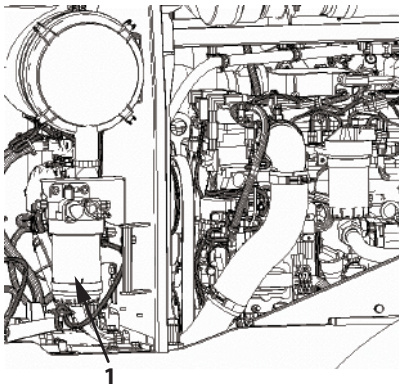

MNTL-07-033-3 ja

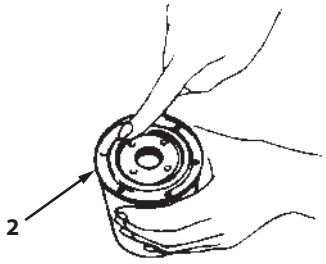

M4GB-07-066-1 ja

6 Clean Solenoid Fuel Pump Strainer

--- every 1000 hours

Cleaning Procedure

When the strainer is disassembled, replace the gasket. Install the cover and the magnet only after cleaning them well. After the strainer is assembled, closely check the air-tightness of the strainer.

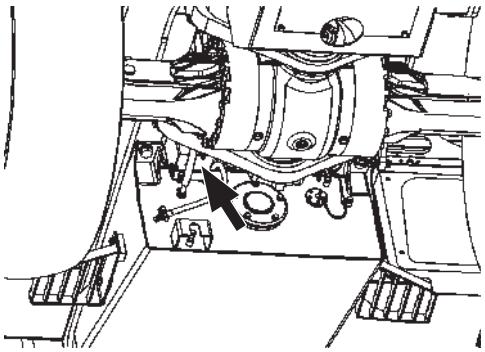

MPTC-07-004-1 ja

Disassembling and Assembling

Loosen cover (1) with a spanner and remove it. After cover (1) is removed, gasket (2), strainer (3), and gasket (4) are easily removed in order from pump (5). Wash removed strainer (3) with diesel. Assemble the strainer in the reverse order of disassembly. At that time, install gasket (2) into cover (1) first. Securely tighten the cover to the machine using a 17 mm spanner.

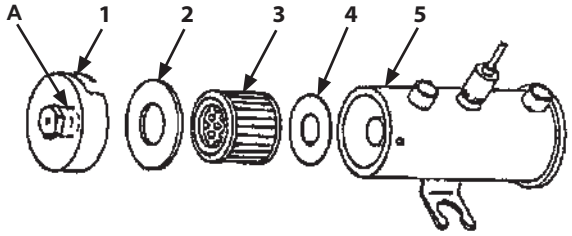

M1GR-07-004-2 ja

NOTE

Wrench size: Spanner 17 mm

A: Magnet

IMPORTANT

- **Only carry out cleaning and replacement of the strainer as well as the replacement of gaskets (2) and (4) while servicing the machine. Never attempt to disassemble other internal parts.**

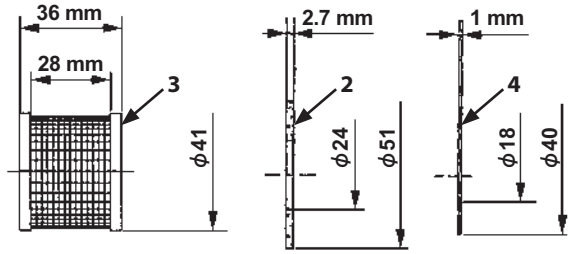

M1U1-07-006-1 ja

- **Gasket (4) can get caught in shaft (6) of pump (5), making it difficult to remove the gasket, but do not disassemble shaft (6) of pump (5).**

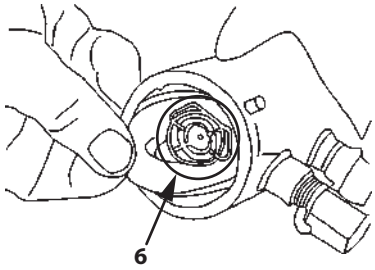

MDAA-07-053-3 ja

If the gasket is difficult to remove, do not disassemble other parts, rather stretch gasket (4) to remove it.

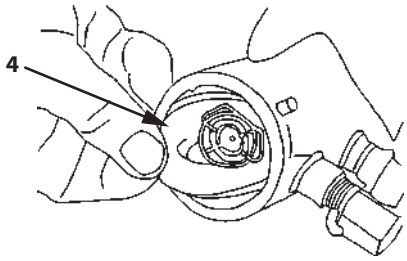

MDAA-07-053-4 ja

Gasket (4) can be easily removed by stretching it out.

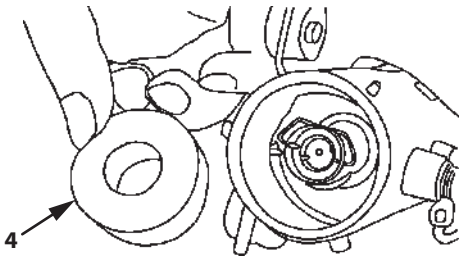

MDAA-07-054-2 ja

Use new gasket (4) when assembling.

7 Check Fuel Hoses

--- every 10 hours/250 hours

WARNING

Fuel leaks can lead to fires that may result in serious injury.
Check for twisted hoses, hoses that rub against each other or other parts and any fuel leaks.
Repair or replace any loose or damaged hoses.
Never reinstall bent or damaged hoses.

According to the check points shown below.

If any abnormality is found, replace or retighten as instructed in the table.

Hose

Interval (Hours)	Check Points	Check For	Remedies	
Every 10 hours	Hose ends Safety hose covers	Leak (1) Wear, crack (2)	Retighten or replace	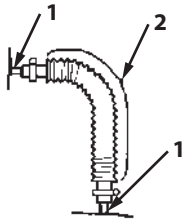
Every 250 hours	Safety hose covers Hose ends Hose Hose fittings	Crack (3) Crack (4) Bend (5), Collapse (6) Corrosion (7)	Replace Replace Replace Replace	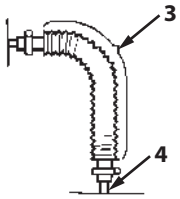 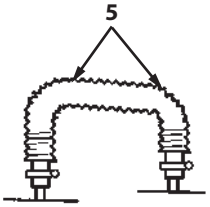 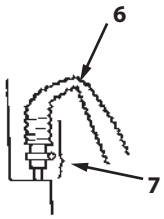

F. Air Cleaner

1 Clean or Replace Air Cleaner Element

Clean---when indicator is lit

Replace --- after cleaning 6 times (or 1 time a year)

Air cleaner (1) is a double element, consisting of an outer element and an inner element. Normally the outer element is cleaned.

1. Park the machine according to the instructions listed in section (7-8) of "Preparations for Inspections and Maintenance".

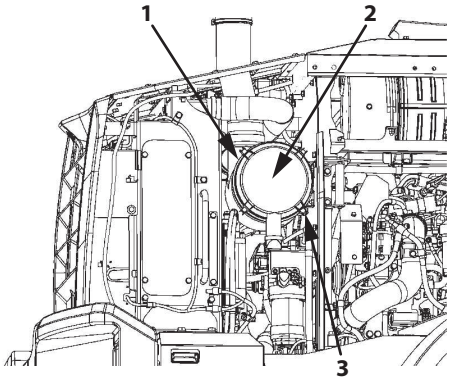

MPTC-07-024-1 ja

IMPORTANT

Be careful not to get any debris into the engine when cleaning and replacing parts.

2. Loosen clip band (3), remove dust cap (2) and remove dust inside the cap.

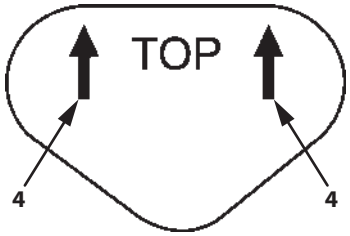

M4FC-07-037-1 ja

⚠ CAUTION

When using compressed air "0.69 MPa (2 kgf/cm^2) or lower", wear safety glasses or goggles.

IMPORTANT

When cleaning, do not hit or strike the element with another object.

3. Clean outer element (6) by blowing compressed air "0.69 Mpa or lower" from the inside of the element. After cleaning, be sure to check outer element (6) for damage. If any damage is found, replace the element with a new one.

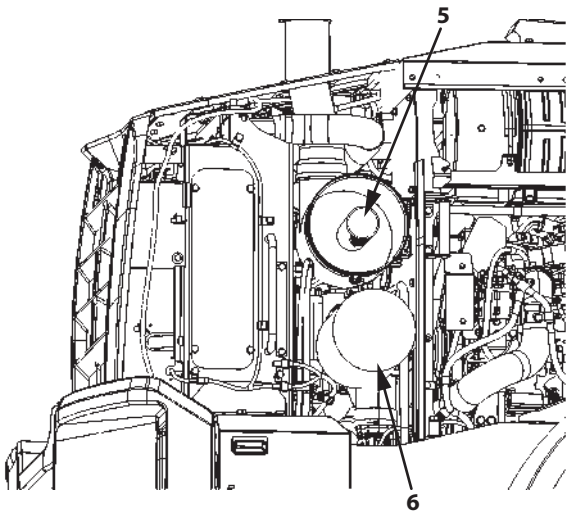

MPTC-07-025-1 ja

IMPORTANT

Do not clean and reuse inner element (5).

4. If the air cleaner clogged indicator lights soon after cleaning outer element (6) even if it has been cleaned less than 6 times, replace both outer (6) and inner (5) elements with new ones.
5. Reinstall dust cap (2) back in its original place with its arrows (4) (↑TOP↑) pointing upwards.
6. After cleaning, run the engine at slow speed and make sure the indicator does not light.

2 Check Air Intake System

--- daily

Check pipes and hoses of the air intake system for wear, damage or loose connections and clamps. Replace damaged pipes and hoses. Retighten loose clamps.
Tightening Torque: 8 N·m (0.8 kgf·m)

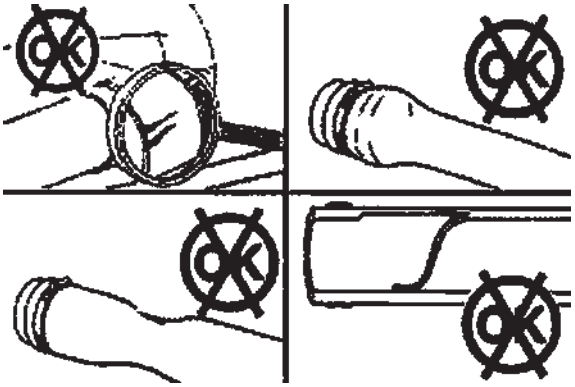

MNEC-07-121 ja

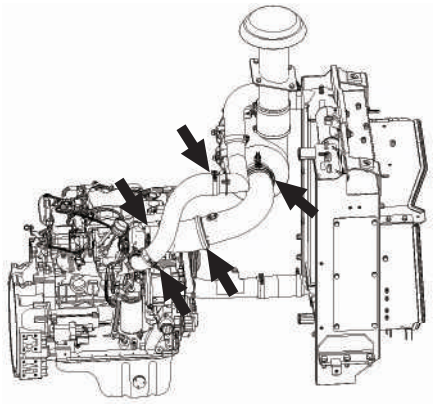

MNTL-07-035-1 ja

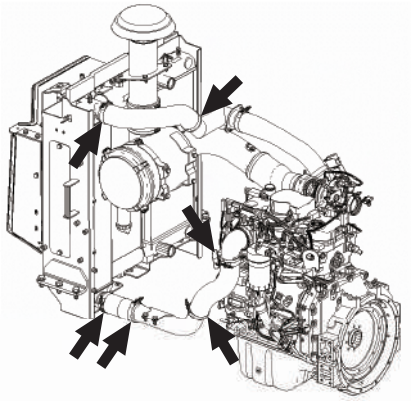

MNTL-07-036-1 ja

G. Cooling System

Coolant

Use fresh water or normal tap water as a coolant. Do not use strongly acidic or alkaline water. Use a coolant mixed with 50% genuine Hitachi Construction Machinery Long-Life Coolant (LLC).

Precautions for Handling Antifreeze

WARNING

Antifreeze is poisonous.

- **If accidentally ingested, induce vomiting and seek medical attention immediately.**
- **If antifreeze is accidentally splashed into the eyes, immediately flush with water for 10 to 15 minutes and seek medical attention.**
- **When storing antifreeze, keep it in a clearly marked container with a tight lid. Always keep antifreeze out of the reach of children.**
- **Pay attention to fire hazards. Antifreeze is designated as a dangerous substance under the Fire Service Act.**
- **Disposal methods are given in the Industrial Waste Disposal Regulations. When disposing of antifreeze, do so in compliance with all regulations.**

Long-Life Coolant Ratio [%]	Total Capacity: 20 L	
	Long-Life Coolant [L]*	Soft water [L]
50	10	10

NOTE

**Use concentrated type antifreeze.*
If the premixed 50/50 is used, do not mix with water.

1 Coolant Level

--- every 10 hours

WARNING

Do not remove cap (1) until the coolant in the radiator cools down. Hot steam may gush out, possibly causing severe burns. After the coolant cools down, slowly loosen cap (1) to release the pressure inside the radiator before removing it.

The coolant must be between the FULL (3) and LOW (4) markings on expansion tank (2).
If the coolant is below LOW (4), remove cap (1) from expansion tank (2) and refill coolant.

- When refilling a Long-Life Coolant (LLC), use the same brand of LLC and the same concentration as already used in the machine.
- If only water is added, the concentration in the Long-Life Coolant (LLC) will be diluted, lessening the effectiveness of the anti-rust and antifreeze properties of the coolant.

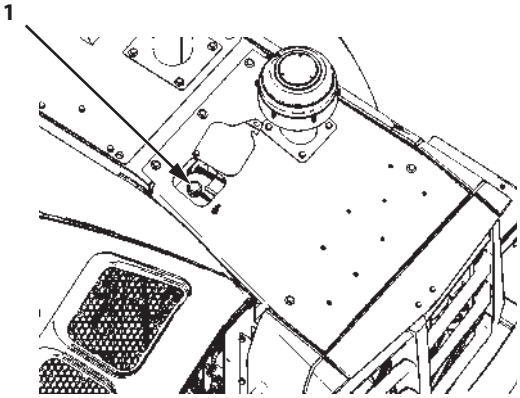

MNTL-07-037-1 ja

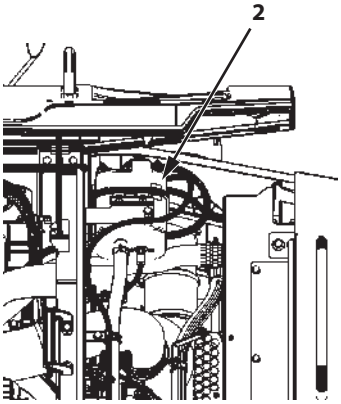

MNTL-07-038-1 ja

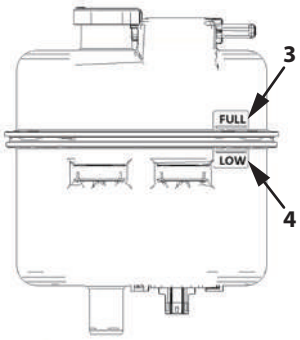

MNTL-07-039-1 ja

2 Check the Drive Belt

--- every 10 hours

Check the drive belt for damage and replace with a new one if it is cracked.

3 Check the Drive Belt Tension

• • • 1000 hours or 1 time a year

1. Park the machine according to the instructions listed in section (7-8) of "Preparations for Inspections and Maintenance".
2. Attach articulation lock bar to the front and rear frames according to the instructions listed in section (7-11) of "Lock the Frame".
3. Open the engine compartment side panel.
4. With the belt installed, verify that neither arm stopper for belt tensioner (2) is in contact with the spring case stopper. If either stopper is touching, replace drive belt (1).

   After replacing the belt, if the arm stoppers are still in contact with the spring case stopper, replace belt tensioner (2).
5. Check belt tensioner (2) for any looseness and cracks on arm, pulley, and stoppers. If any cracks are found, the belt tensioner must be replaced.

   NOTE

   When replacement of belt tensioner (2) is required, contact Authorized Dealer.
6. Check belt tensioner pulley (3) for any dirt or damage.
   If it is dirty or damaged, it must me cleaned or replaced. Contact Authorized Dealer.
7. Make sure the drive belt lies centered on belt tensioner pulley (3).
   Misaligned belts, either too far forward or backward, can cause belt wear, belt slip-off, or exacerbate uneven tensioner bushing wear.

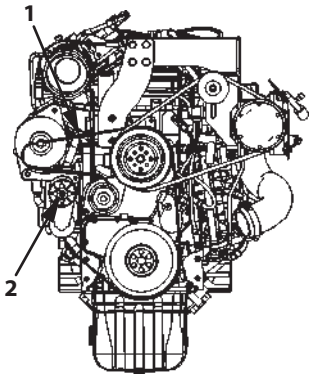

MPTC-07-013-1 ja

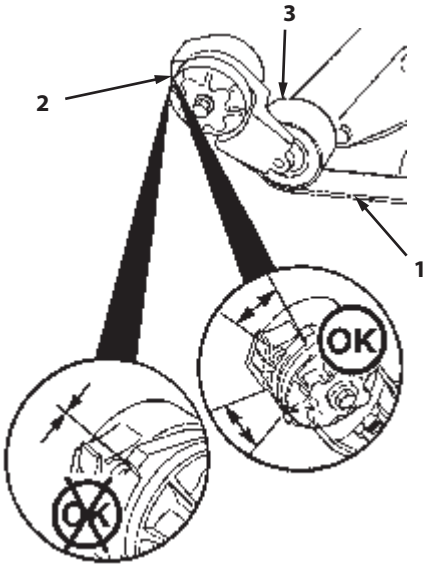

90Z7B-7-77-2-1 ja

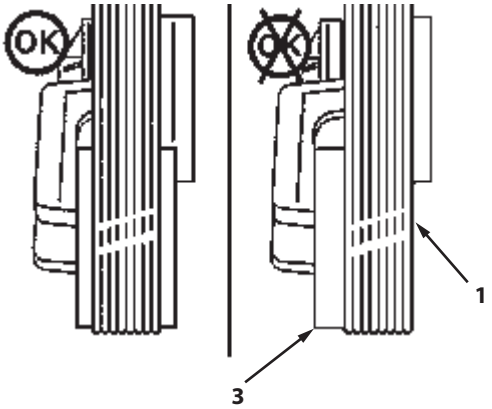

90Z7B-7-77-3-1 ja

4 Replace Coolant

--- replace every 3000 hours or every 2 years

CAUTION

Do not remove cap (1) of the expansion tank until the coolant in the radiator cools. Hot steam may gush out, possibly causing severe burns. Once the coolant cools down, loosen cap (1) gradually to release the pressure before removing it.

IMPORTANT

Use Hitachi Construction Machinery genuine coolant.

1. Park the machine according to the instructions listed in "Preparations for Inspections and Maintenance" on page (7-8).
2. Attach articulation lock bar to the front and rear frames according to the instructions listed in "Lock the Frame" on page (7-11).
3. Remove cap (1) of the expansion tank and open drain cock (2) of the radiator to drain the coolant.
4. Close radiator drain cock (2). Fill with the specified LLC (refer to 1 Coolant Level). When adding coolant, do so slowly to avoid introducing air bubbles into the system.
   Start the engine and bleed a decent amount of air from the cooling system.

   NOTE

   When refilling with a coolant, pour it at a flow rate of 13 L/min or less. If the flow rate is more than this, only a small amount of air will bleed, preventing the system from being filled with coolant to the specified amount.

5. After adding coolant, operate the engine for several minutes and check the coolant level again. Add coolant if level is low.

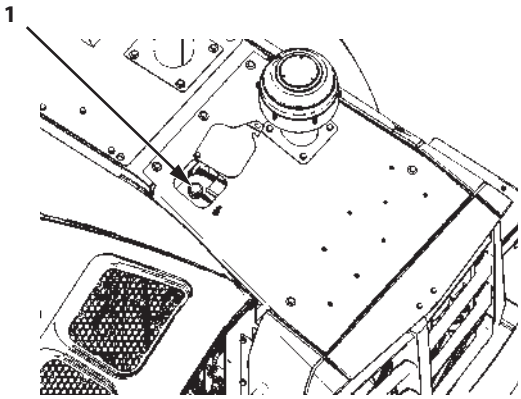

MNTL-07-037-1 ja

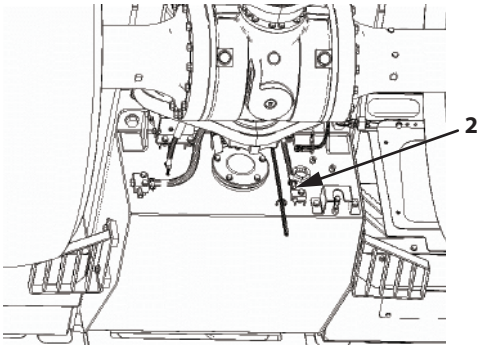

MNTL-07-041-1 ja

5 Clean the Radiator and Oil Cooler

--- every 500 hours or when clogged

CAUTION

When using compressed air "0.2 MPa (2 kgf/cm^2) or lower", wear safety glasses or goggles.

IMPORTANT

If compressed air "0.2 MPa (2 kgf/cm^2) or higher", or tap water at high pressure is used for cleaning, damage to the radiator or oil cooler fins may result. Keep the nozzle at least 500 mm away from the core surface.

1. Park the machine according to the instructions listed in section (7-8) of "Preparations for Inspections and Maintenance".
2. Attach the articulation lock bar to the front and rear frames according to the instructions listed in section (7-11) of "Lock the Frame".
3. Remove left and right inspection covers (1) and (2).

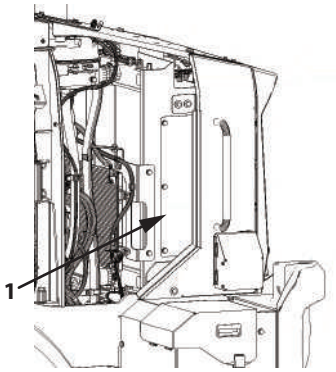

MNTL-07-042-1 ja

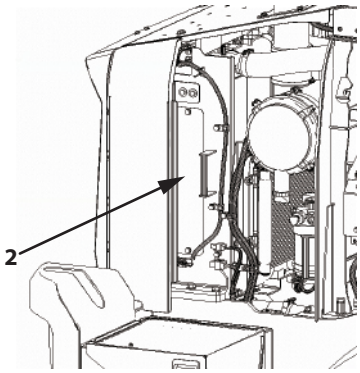

MNTL-07-043-1 ja

4. Clean radiator (5), oil cooler (3) and intercooler (4) via the hydraulic drive fan side. Clean air conditioner condenser (7) via bracket cleaning port (6) on the left side of the machine or from the top.

NOTE

If there is any dirt or debris stuck to the radiator or oil cooler cores, clean them with compressed air "0.2 MPa (2 kgf/cm^2) or lower" or tap water. This prevents a drop in performance of the cooling system.

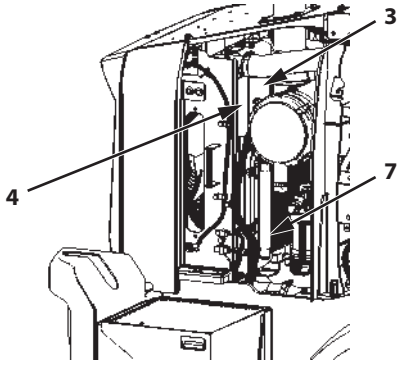

MNTL-07-045-1 ja

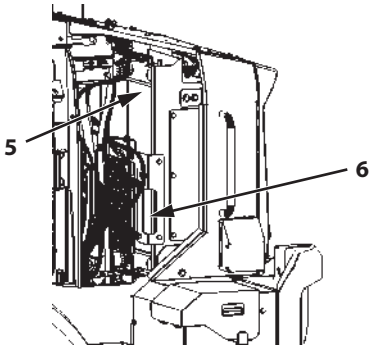

MNTL-07-044-1 ja

H. Electrical System

WARNING

Improper radio communication equipment and associated parts, and/or improper installation of radio communication equipment affects the machine's electronic parts, causing unintended movement of the machine.

Improper installation of electrical equipment may cause machine failure and/or a fire on the machine.

Consult Authorized Dealer when installing radio communication equipment or additional electrical parts in the machine.

IMPORTANT

Never attempt to disassemble or modify the electrical/electronic components. If replacement or modification of such components is required, consult Authorized Dealer.

1 Battery

WARNING

- **While charging or using the battery, explosive gas can be produced. Keep sparks and flames away from batteries.**
- **Do not leave cover (1) removed. Do not keep tools, metals or flammable materials around the battery or inside the battery room. If a metal tool is placed across the battery terminal and a vehicle component such as the engine block, sparks may be created, possibly resulting in fire and/or explosion.**
- **Do not continue to use or charge the battery when electrolyte level is lower than specified. Explosion of the battery may result.**
- **Charge the batteries in a well ventilated location.**
- **Sulfuric acid is used in the battery electrolyte. It eats skin and clothing, and even metal. Wearing eye protection and rubber gloves.**
- **Keep the battery level. If tilted, electrolyte may leak, causing burns or damage to clothing.**

SA-032 ja

IMPORTANT

- **If the battery is used with the electrolyte level lower than the specified lower level, the battery may deteriorate quickly.**
- **Do not refill electrolyte more than the specified upper level. Electrolyte may spill, damaging painted surfaces and/or corroding other machine parts.**

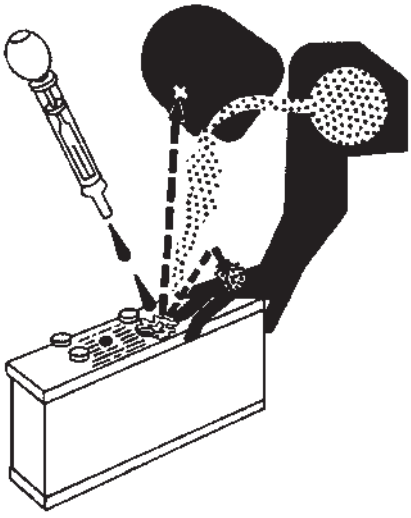

SA-036 ja

NOTE

If electrolyte is refilled above the specified upper level line or beyond the bottom end of the sleeve, use a pipette to remove the excess electrolyte until the electrolyte level is down to the bottom end of the sleeve. After neutralizing the wiped up electrolyte with baking soda (sodium bicarbonate), flush it with plenty of water. Or, contact the battery manufacturer.

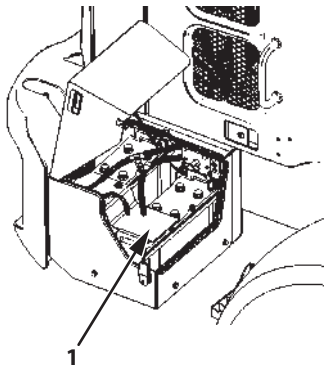

MNTL-07-046-1 ja

Precautions for Handling Batteries

- If battery electrolyte spills on the skin and/or clothes, immediately flush the skin and/or clothes with water and then wash further with soap.
  If splashed in eyes, flush with water for approximately 15 minutes and seek immediate medical attention.
- Avoid using fire hazards such as matches lighters and tobacco near the batteries. Do not allow sparks to fly.
- Check or service the battery only after stopping the engine, turning the key OFF and removing the battery filler plug.
- Contact with the battery just after operation may cause personal injury. Wait for the battery to cool.
- When the battery is charging, flammable hydrogen gas is created. Remove the battery from the machine and charge the battery in a well ventilated area after removing the filler plug.
- When disconnecting the battery terminals, first disconnect the ground line [minus (-)] side terminal. When connecting the battery terminals, connect the ground line [minus (-)] side terminal last. If a piece of metal, such as a tool comes in contact with the battery plus (+) side terminal and the machine frame when both terminals are connected, the electrical system may short-circuit, possibly creating a dangerous situation.
- When a battery gets old, mixing in a new battery with an old may cause the new battery to have a shorter than normal life. Replace both batteries at the same time.
- Loose terminals may cause sparks to fly. Securely tighten them.

Electrolyte Level Check --- 1 time a month

Check the electrolyte level at least 1 time a month.

1. Park the machine on level ground and stop the engine.
2. How to Check the Electrolyte Level
   a. When checking the level from the battery side: Clean around the level marks with a water-dampened cloth and make sure the electrolyte level is between U.L (Upper Level) and L.L (Lower Level). Do not use a dry towel. Static electricity may develop, causing the battery gas to explode.
   If the electrolyte level is lower than the middle level between the U.L and L.L, immediately refill with distilled water or commercial battery fluid.
   After refilling, securely tighten the filler plug.
   Be sure to refill with distilled water before charging (operating the machine).

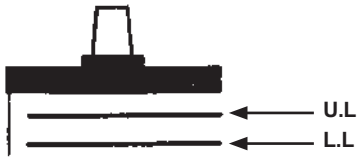

Side of Battery

M146-07-109-2 ja

U.L Upper Level L.L Lower Level

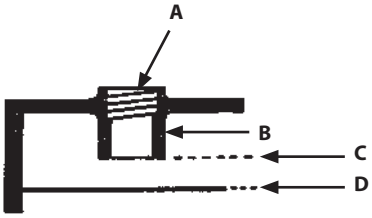

Inside of Battery

M146-07-110-2 ja

A Filler plug C Upper Level
B Sleeve D Lower Level (Separator Top)

   b. If checking from the side of the battery is not possible, or if there are no level marks on the side:
   After removing the filler plug from the top of the battery, check the electrolyte level by viewing through the filler port. It is difficult to judge the electrolyte level accurately in this case, so judge its level as shown in the diagrams. When the electrolyte level is lower than the bottom end of the sleeve, refill with distilled water or commercial battery fluid up to the bottom end of the sleeve.
   After refilling, securely tighten the filler plug.
   Be sure to refill with distilled water before charging (operating the machine).
   c. If the level can be checked with an indicator, etc., follow its instructions.

   Checking the Level via an Indicator

Good		When electrolyte reaches the bottom of the sleeve, surface tension makes the electrodes appear bent.
Low		When the electrolyte surface is lower than the bottom end of the sleeve, the electrode ends appear straight.

3. Always keep the area around the battery terminals clean. This prevents the battery from discharging. Check terminals for looseness and/or rust. Coat terminals with grease or petroleum jelly to prevent corrosion build up.

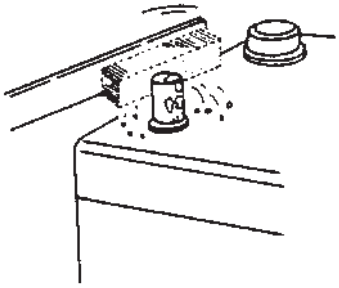

M409-07-072 ja

Replace Battery

IMPORTANT

When making adjustments to the electrical system or welding on the machine, disconnect the negative cable from the battery. If the machine is equipped with a battery disconnect switch, turn it OFF.

This machine is equipped with two 12 V batteries, which are negatively grounded.

If one battery is damaged on the 24 V system, replace the damaged battery with the same type of new battery. If a maintenance-free battery is damaged, for example, replace it with new maintenance-free battery. The type of battery charger differs depending on the battery charge life. So, the batteries may be overloaded and damaged.

Check Electrolyte Specific Gravity --- 1 time every month

WARNING

- **Gas produced by the battery can be explosive.**
  Keep sparks and flames away from batteries.
  Use a flashlight to check the battery electrolyte level.
- **Sulfuric acid in battery electrolyte is poisonous. It is strong enough to burn skin, eat holes in clothing, and cause blindness if splashed into the eyes.**
- **Never check the battery charge by placing a metal object across the posts. Use a voltmeter or hydrometer.**
- **Remove the negatively grounded clamp first, then connect.**

Avoid hazards by:

1. **Charge the batteries in a well ventilated location.**
2. **Wear safety glasses and rubber gloves.**
3. **Avoiding breathing fumes when electrolyte is added.**
4. **Avoiding spilling or dripping electrolyte.**
5. **Start the engine using the proper procedure and booster cables.**

If battery acid is spilled on the skin,

1. **flush the skin with water.**
2. **Apply baking soda or lime to help neutralize the acid.**
3. **If it gets in the eyes, rinse them out for 15 to 30 minutes and get medical attention immediately.**

If acid is swallowed:

1. **Do not induce vomiting.**
2. **Drink large amounts of water or milk.**
3. **Get medical attention immediately.**

IMPORTANT

- **Add water to batteries in freezing weather before the initial startup of the machine for the day, or before charging the batteries.**
- **If the battery is used with the electrolyte level lower than the specified lower level, the battery may deteriorate quickly.**
- **Do not refill electrolyte more than the specified upper level. Electrolyte may spill, damaging painted surfaces and/or corroding other machine parts.**
- **Make sure the battery is fully charged at all times. Failure to do so may make it difficult to start the engine.**

NOTE

Check the specific gravity of the electrolyte after it is cooled, not immediately after operation. Immediately after operation the electrolyte is still changing, so it cannot be measured accurately.

Check the electrolyte specific gravity in each battery cell.

The lowest limit of the specific gravity for the electrolyte varies depending on electrolyte temperature. The specific gravity should be kept within the range (A) shown below. Charge the battery if the specific gravity is below the limit.

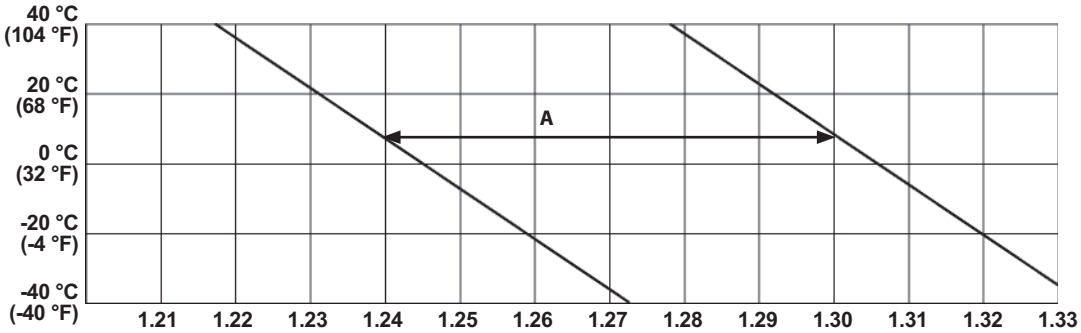

Relationship between Electrolyte Specific Gravity and Temperature

M104-07-054-2 en_GB

2 Monitor Functions, Instrument Operation

--- every 10 hours

Check each device with the engine at slow idle.
On the monitor, red indicators are used for alarms, orange ones for cautions, and blue or green ones as operation checks.
Turn the key switch ON and check if the needles of instruments move. After starting the engine, the needle will move to the blue zone when normal and to the red zone when there is a problem.
For details, refer to items in the section “Operator's Station” of chapter 1.

3 Lamps Light or Flash

--- every 10 hours

CAUTION

Replace burned out lamps as soon as possible with new ones.

Check whether all work lights (1), shown by the bold arrows, light up and flash from the front and rear of the machine.
Check for any looseness and rattling. If found, contact Authorized Dealer.

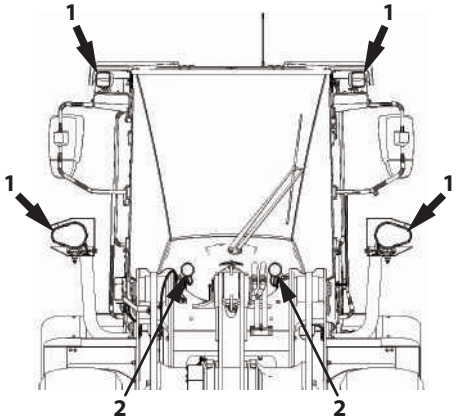

MNTL-07-047-1 ja

4 Check Horn and Reverse Buzzer

--- every 10 hours

WARNING

When checking the operation of the horns and reverse buzzer, engage the parking brake and do so in a location with no one around.

Push the horn switch at the center of the steering wheel and on the control lever to check the sound of the horn.
Horn (2) is located on the front frame. Reverse buzzer (3) is located at the right side of the rear grill.
Check that the reverse buzzer (3) sounds properly using either the F-N-R lever (or the F-N-R switch) to the reverse side.

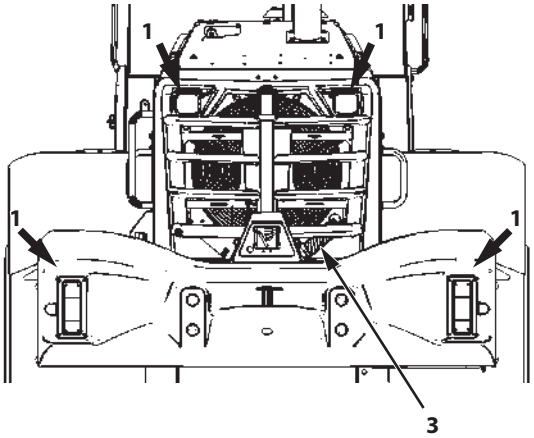

MNTL-07-048-1 ja

5 Check Electrical Wiring and Fuses

--- every 50 hours

CAUTION

If electrical parts such as wiring and relays have dirt or dust on them, they may cause a fire.

Check the battery, starter motor, alternator wiring and terminals for looseness and check the wiring harnesses (damaged coating). Clean off any dirt or dust sticking to them. Consult Authorized Dealer if any wiring is burned or smells unusual.

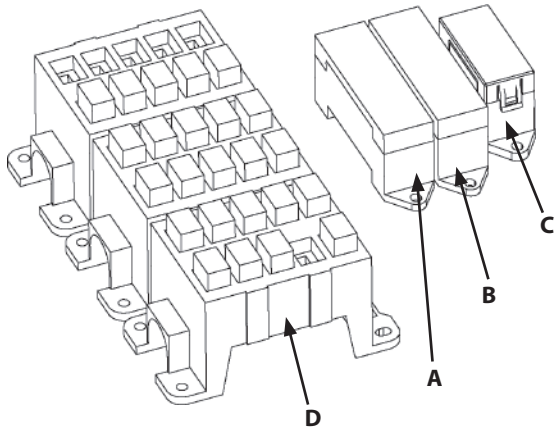

MNUD-07-001-2 ja

A:Fuse Box A B:Fuse Box B
C:Fuse Box C D:Relay Boxes

Check and Replace Fuses

1. If any electrical device fails to operate, first check the fuses in fuse boxes A, B and C located in the rear left console of the operator's station.
2. One spare fuse for each fuse capacity is provided in fuse boxes A and B.
3. Finally, check the slow blow fuses (1), (2) and (3) on the left side of the engine.
   1- 30 A, 70 A
   2- 30 A, 140 A
   3- 120 A, 120 A

NOTE

For the fuse configuration inside the fuse boxes, refer to the section (1-234) of the Chapter "Fuse Box" in Chapter 1 "Operator's Station".

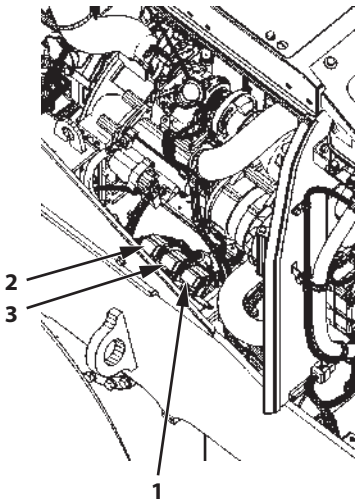

MNTL-07-049-1 ja

I. Brake System

1 Check Braking (Left/Right Interlocked)

--- every 10 hours

WARNING

- **Put up a no entry sign for a 100 m forward-travel testing zone and someone to monitor safety.**
- **Do not allow dirt, sand or other debris to accumulate around where brake pedal (3) is mounted. Failure to do so may inhibit use of the brakes.**

Depress brake pedal (1) and check whether the pedal feels abnormal and if the brakes work normally; check the amount of pedal play.
If dirt, sand or other debris has accumulated around where brake pedal (3) is mounted, clean it out.

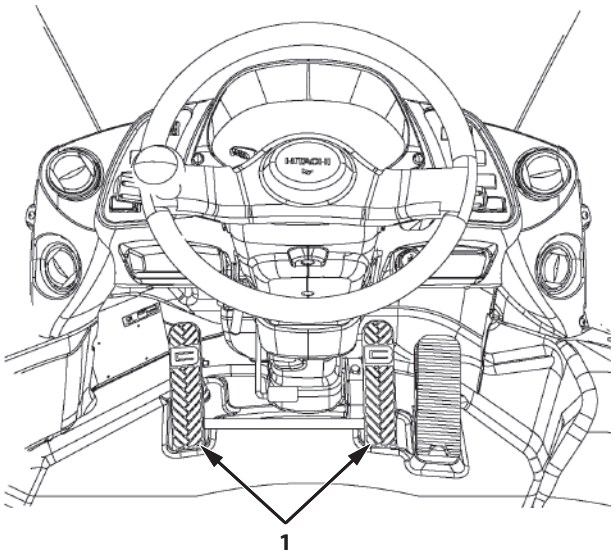

MNUD-01-143-3 ja

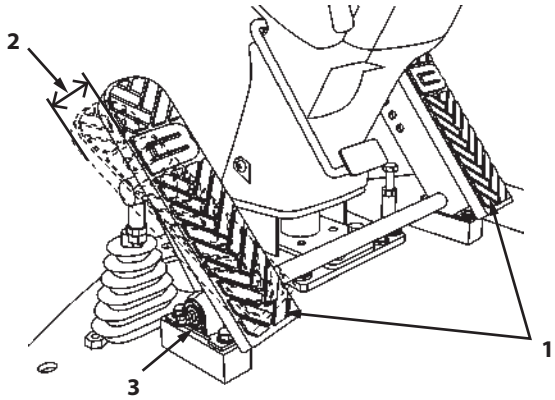

MNEC-07-042-1 ja

Braking Effectiveness

Braking is acceptable if it takes less than 5 m to stop from an initial speed of 20 km/h with no load on a flat, dry, paved road surface.

Brake Pedal Play

Push the pedal by hand and measure how far the end of the pedal moves until resistance is felt.

Amount of Play (2):7 mm to 16 mm

Consult Authorized Dealer if play is outside the allowance.
Consult Authorized Dealer if anything abnormal is felt in brake pedal operation or effectiveness. Have the dealer check and/or repair the machine.

2 Check the Parking Brake

--- every 10 hours

WARNING

Conduct checks where no one is around or is in the direction the machine will travel.
Also, do not allow anyone to approach the area.

The parking brake is acceptable if the machine does not move with parking brake switch (4) ON, under no load, on a dry slope of 20% (11.3°).
Contact Authorized Dealer if the machine moves during the check. Have the dealer check and/or repair the brake.

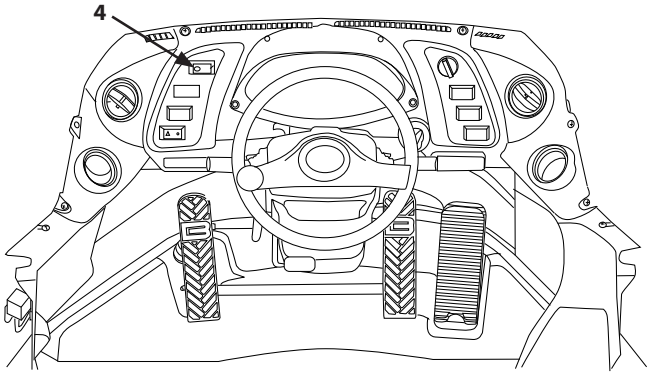

MNDB-01-001-2 ja

3 Check the Accumulator for Function, Gas Leakage, Looseness and Damage

--- every 500 hours

WARNING

- **The accumulator may only be handled by someone certified.**
- **It contains high-pressure nitrogen gas. Practicing caution is essential to prevent fires from occurring.**
- **Never strike the accumulator or have flame close to it.**
- **Do not apply direct heat to the accumulator or weld it.**
- **Relieve the pressure before performing maintenance on the pipe lines.**

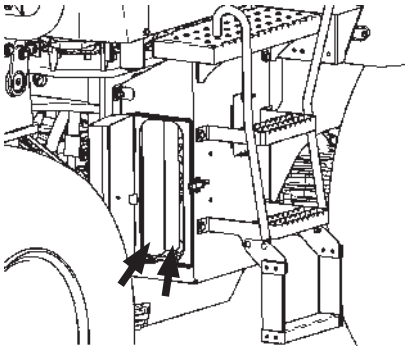

MNDF-07-030-1 ja

1. Checking the warning function.
   With the key switch ON and the engine stopped, check that when the brake pedal is strongly depressed more than 5 strokes, the brake oil pressure indicator lights up.
2. Checking for warning function deactivation.
   Start the engine. Run the engine at medium speed to pressurize the accumulator. When a specified pressure is reached, the warning buzzer stops sounding and the brake oil pressure indicator goes out.
3. Check how many times the brake pedal is depressed.
   With the key switch ON and the engine stopped, check that the brake pedal can be depressed more than 5 strokes before the brake oil pressure indicator lights up.
   The 3 points described above must be confirmed as normal. Besides the above points, check the accumulator for any gas leakage, looseness, and damage. If an abnormality is found, immediately contact Authorized Dealer.

4 Check Gas Pressure of the Accumulator

--- every 2000 hours

Check the gas pressure at the specified interval. If the machine is operated with the gas pressure lower than specified value, normal braking and loading may not be carried out, possibly creating very hazardous situations. When checking is required, consult Authorized Dealer.

5 Replace Parking Brake Accumulator

Every 4000 hours or 2 years, whichever comes first

When replacement is required, contact Authorized Dealer.

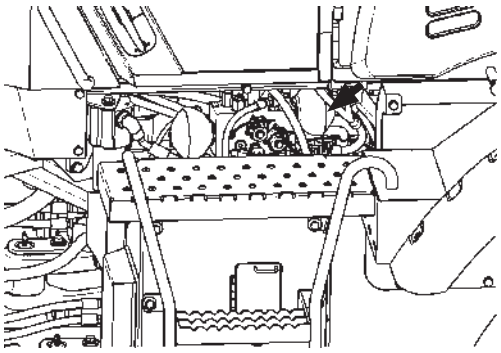

MNDF-07-015-3 ja

6 Check Brake Discs (Service and Parking)

--- every 2000 hours

Service brake (1) is a closed, wet-type brake.
Parking brake (2) is a dry, disk type brake that is mounted on the transmission side.
When inspection is required, contact Authorized Dealer.

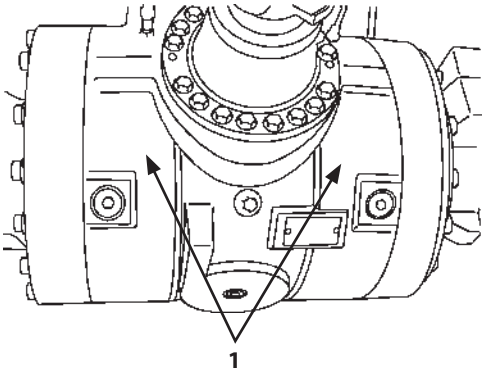

M4FC-07-023-1 ja

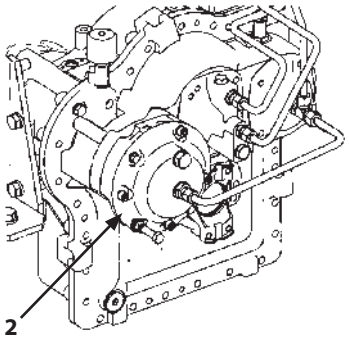

M4FC-06-001-1 ja

J. Tires

1 Check and Adjust Tire Pressure

Check --- every 10 hours
Adjust--- as required

WARNING

- **Lock the front and rear frames with the articulation lock bar and pin.**
- **When inflating tires, stand behind the tread of the tire and use the self-attaching chuck.**
- **Avoid welding near tires, as it may cause the tire to explode.**
- **Be warned that tires may explode if: a tire is smoking due to heat in the event of a machine fire, the tire is unusually hot or the air smells of rubber; or there are signs that the tire bead is burning.**

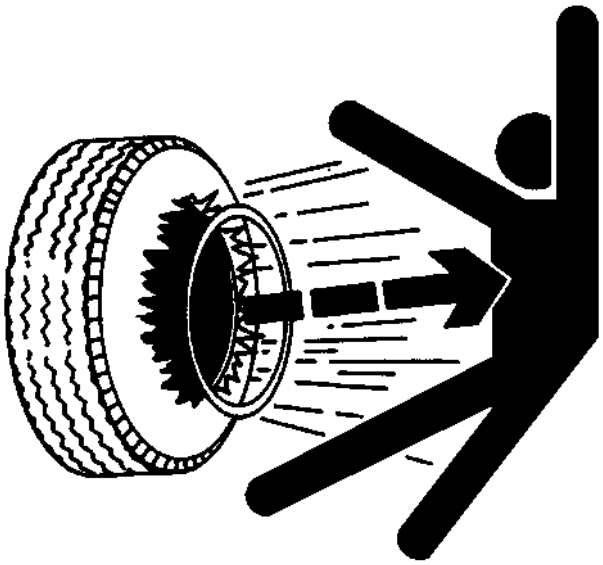

SA-249 ja

IMPORTANT

- **Always keep the tires at the correct air pressure.**
- **If a tire has even only one worn tread pattern, replace it with new one. Check the tires for cracks, damage and foreign matter before starting work.**
- **Even if replacing just one tire, use a new tire having the same tread (pattern), manufacturer and specifications as the other tires.**

Checking the Air Pressure

1. Check air pressure before work when the tires are cold.

Standard Tire	Standard Air Pressure
20.5R25	400 kPa (4.00 kgf/cm^2)

2. Check for damage and excessive wear to the tires.

2 Check for Damage to Tires

--- every 10 hours

WARNING

Tires with cuts or other damage can cause a puncture or the tires to burst. This may lead to a serious accident and/or injury and death.

Inspect the appearance of tires for cuts, damage, metal fragments and other foreign matter.

3 Retighten Wheel Bolts

--- every 500 hours (first time only, after 50 hours)

Tighten in a pattern around the wheel.
Tightening Torque: 890 N·m (89 kgf·m)

Replacing Tires

WARNING

Lock the front and rear frames with the articulation lock bar and pin.

IMPORTANT

The overall height of the machine may change with the kind of tire.
That specification must not be altered for machines that are registered as vehicles.

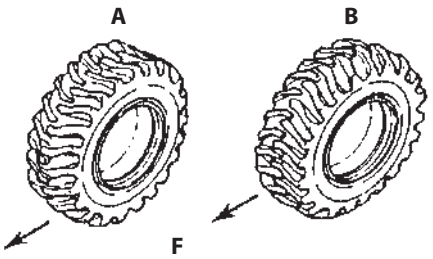

M4GB-07-104-3 ja

A:Correct B:Incorrect
F:Front

1. Park the machine according to the instructions listed in section (7-8) of "Preparations for Inspections and Maintenance".
2. Attach articulation lock bar to the front and rear frames according to the instructions listed in section (7-11) of "Lock the Frame".
3. Loosen all wheel bolts 1 turn.
   Note which way the tread pattern is facing.
4. After jacking up the machine, securely support the machine with blocks.
5. Remove the wheel bolts. Replace the tire.
6. With the tire raised off the ground, lightly tighten the wheel bolts in order as illustrated to the right.
7. Lower the machine. Retighten the wheel bolts to the specified torque in order as illustrated to the right.

NOTE

The number of tightening bolts may differ from that in the figure.

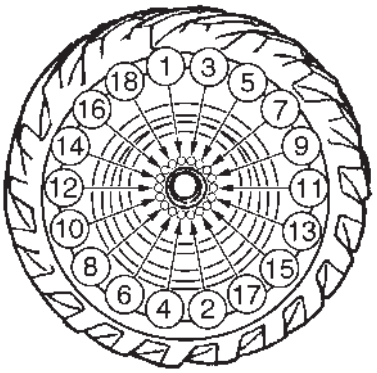

M4GB-07-102 ja

Applicable Tire Size

NOTE

Consult Authorized Dealer for tread pattern of optional tires.
The machine may vibrate while driving depending on the tread pattern of tires. This is a sympathetic vibration due to tread pattern, not a malfunction.

Radial Tires

Tire Size	Pattern	Air pressure	Adjustment range
20.5R25	L3	400 kPa (4.00 kgf/cm^2)	400 to 500 kPa (4.00 to 5.00 kgf/cm^2)
	L5	400 kPa (4.00 kgf/cm^2)	400 to 500 kPa (4.00 to 5.00 kgf/cm^2)

NOTE

Adjust air pressure according to the size and type of tires provided in the table above regardless of the tread pattern.

Adjust tire pressure in conformity with the work mode the machine is engaged in.
Consult Authorized Dealer for more detailed information.

- Driving on Public Roads: ... Standard pressure
- Loading/excavation on normal ground surface: ... Standard or slightly higher than standard pressure
- Heavy-duty excavation: ... Higher pressure in the standard pressure range
- Operation on soft terrain or sandy territory: ... Radial ply tire: Stand pressure
  Bias ply tire: Slightly lower than standard pressure

Tire Rotation

Rotate tires when uneven or abnormal wear is recognized on either front or rear, or right and left tires. The aim of rotating the tires is uniform wear on tires and to even out their service life.

Rotation Method

WARNING

Only mount tires free of external damage, such as cuts or abnormal wear.
Because a much greater load is imposed on tires during work (loading) and operation, this kind of damaged tire can result in a puncture or the tire blowing out. This may lead to a serious accident and/or injury and death.

- Switch tires only between front and rear on the same side, and not across (diagonal).
- Align the tire rotation direction with the tire tread pattern. This is particularly important for tires with traction pattern (optional); this affects not only tire economy but also safety of operation.

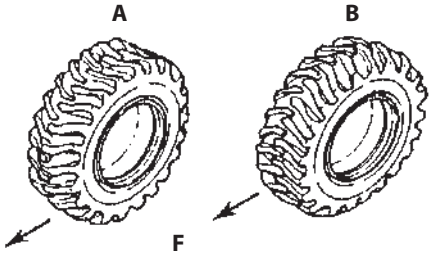

M4GB-07-104-3 ja

A:Correct B:Incorrect
F:Front

Checking Wear (Groove Depth)

Measure groove depth (3) at a point 1/4 across the tread width (1) (marked by × (2) in the figure).

Service limit (time to replace) of the groove depth shall be approx. 85% of the new tire groove depth. However, if there is extremely uneven wear or cords showing, replace them even before they reach 85 %.

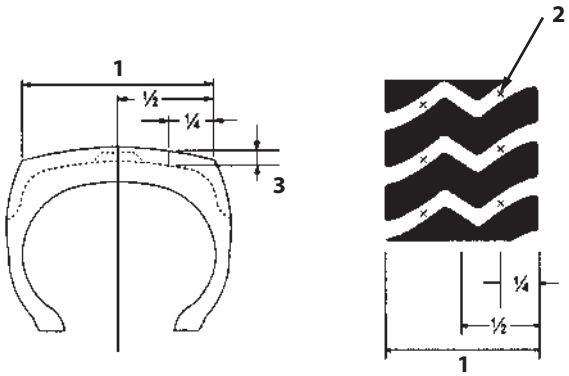

MNEC-07-122-2 ja

IMPORTANT

If the machine is operated with tires at either rear or front being extremely worn or different in type, construction, or size, the powertrain, such as axles or transmission will be adversely affected.
When replacing tires, use the same tires in type, construction and size on all four wheels. It is recommended to replace all four tires at the same time.

Tire Removal and Mounting

WARNING

The tires and wheels are extremely heavy and this work is dangerous and difficult. In addition, a crane is required to lift the tires for removal and installation, so have Authorized Dealer or a professional tire shop perform this work.
If the machine must be jacked up, strictly follow the instructions below.

- **Select a hard, level location with a dry surface.**
- **The work must be performed by at least two people. One person to perform the work, the other to assist and ensure safety.**
- **Do not lift the front wheels with the bucket.**
- **Do not jack up the vehicle any higher than necessary.**
- **When jacking up the front wheels (rear), chock the rear tires (front).**
- **When the vehicle is jacked up, keep it up using rigid supports. Never leave it supported just by the jacks.**
- **Because the rear wheel can move, insert wooden brace between the axle and the frame to keep them from moving.**
- **When removing the wheel bolts, leave the bolt at the top for last. Remove the last bolt once the wheel is lifted by a crane.**
- **Wheel bolt tightening torque: 890 N·m (89 kgf·m).**

Wheels

WARNING

Always have a professional disassemble tires and wheels.
After a tire and wheel have been disassembled and reassembled, the inflation of the tire must be done by a trained professional.
Remove any rust on the wheel. Replace the wheel if it has severe rust, as this can lead to cracks and an accident.

K. Air Conditioner

1 Clean and Replace Air Conditioner Filters

Cleaning the Filter
--- every 100 hours (1 time a week, whichever comes first)
Replace Filter
--- after cleaning 10 times (or when severely clogged)

NOTE
When work sites are dusty, clean and replace sooner.

Clean Fresh Air Filter

1. Removing Fresh Air Filter
   The fresh air filter is installed behind cover (1) on the left rear side of the cab exterior. Open cover (1) with the key (key switch). Loosen wing nut (3) and then remove plate (2). Remove fresh air filter (4).

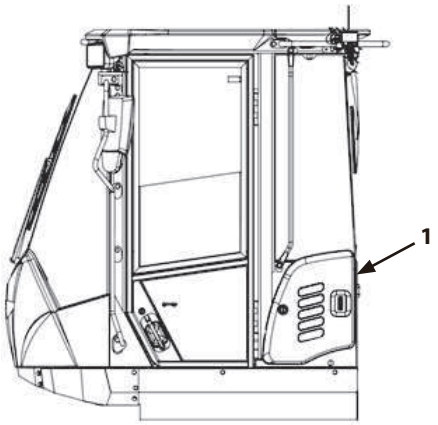

MNTK-01-025-2 ja

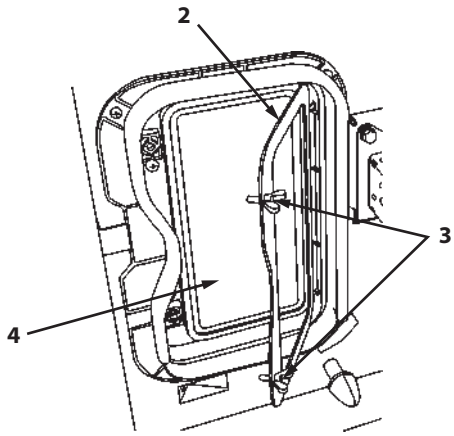

MNEC-07-043-1 ja

CAUTION

When using compressed air, wear safety glasses or goggles.

IMPORTANT

If the delivery pressure of the compressed air is too high, it damages the filter fins. Only use compressed air at a pressure at or below 0.2 MPa (2 kgf/cm^2). Keep the nozzle at least 500 mm away from the core surface.

2. Clean fresh air filter (4) using compressed air.

IMPORTANT

If the filter is not fitted properly, dust and debris can get inside the air conditioner unit, resulting in poor performance and/or damage.
First clean out any dirt around its seat and then mount it with all due care.
Close the cab door when operating the machine.

3. When installing the cleaned fresh air filter or a new filter, follow the reverse order of the “Removing Fresh Air Filter” procedures described in section 1.

Clean Fresh Air Double Filter

1. Removing Fresh Air Double Filter
   The fresh air double filter is installed behind cover (1) on the left rear side of the cab exterior. Open cover (1) with the key (key switch).
   Loosen wing nut (3). Remove plate (2) and fresh air double filter (7).
   Remove bolts (5) (x4), plate (6), and fresh air double filter (7) from plate (2).

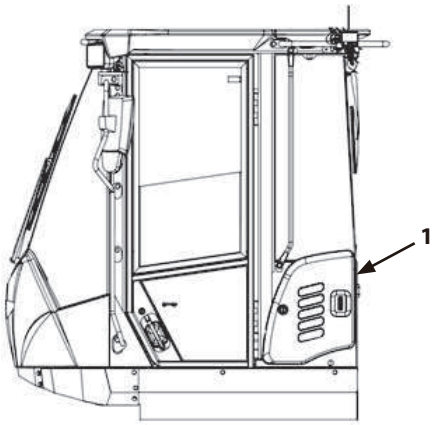

MNTK-01-025-2 ja

CAUTION

When using compressed air, wear safety glasses or goggles.

IMPORTANT

If the delivery pressure of the compressed air is too high, it damages the filter fins. Only use compressed air at a pressure at or below 0.2 MPa (2 kgf/cm^2). Keep the nozzle at least 500 mm away from the core surface.

2. Clean fresh air double filter (7) using compressed air.

NOTE

When the optional cab precleaner is installed, the double filter cannot be used.

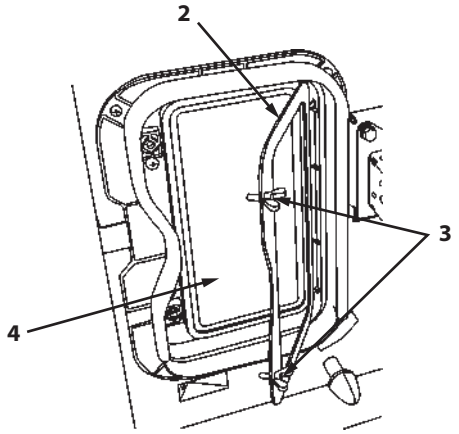

MNEC-07-043-1 ja

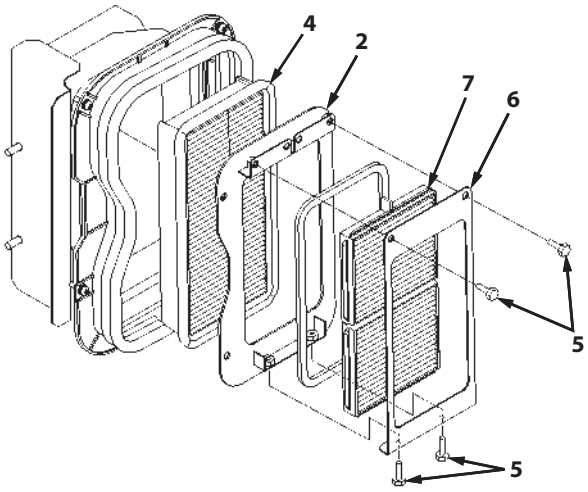

MNHE-07-048-1 ja

Cleaning the Circulating Air Filter

1. Remove the filter:
   Remove mounting screw (6) under cup holder (5) and tilt the cup holder forward. Hold handle (7) and pull it back to remove circulation air filter (8).

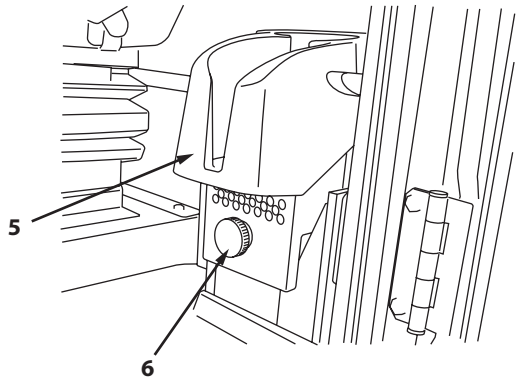

M4GB-07-108-1 ja

CAUTION

When using compressed air, wear safety glasses or goggles.

IMPORTANT

If the delivery pressure of the compressed air is too high, it damages the filter fins. Only use compressed air at a pressure at or below 0.2 MPa (2 kgf/cm^2). Keep the nozzle at least 500 mm away from the core surface.

2. Clean circulating filter (8).
   Clean circulating filter (8) by blowing compressed air or washing with water.
   Washing procedure with water is as follows:
   a. Use tap water.
   b. Submerge the filters in water containing a neutral detergent for about 5 minutes.
   c. Clean the filters with water again.
   d. Dry the filters well.

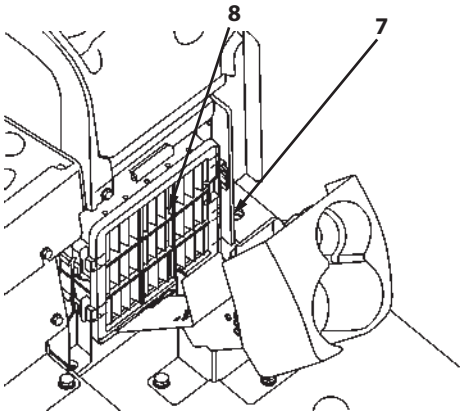

MNEC-07-044-1 ja

IMPORTANT

If the filter is not fitted properly, dust and debris can get inside the air conditioner unit, resulting in poor performance and/or damage.
First clean out any dirt around its seat and then mount it with all due care.

3. When installing the cleaned circulating air filter or a new circulating filter, follow the reverse order of the "Removing Filter" procedures described in section 1.

2 Check Air Conditioner Unit

--- every 6 months

Check the mounts of the AC switch panel, the AC unit and condenser, as well as the and hoses for damage and anything abnormal.

NOTE

Inspect the air conditioner unit before the season when it is needed to ensure it can be used whenever required. When the air conditioner is not used for a long time, operate it once a week on cold to keep it from running out of oil.

WARNING

Do not steam clean the compressor or receiver tank.
Doing so increases the pressure of the refrigerant and may cause the hose to burst.

3 Check Lines

--- every 6 months

CAUTION

Repair or replace if there is a leak and tighten to the specified torque.
Do not simply retighten a joint.

Inspect lines for abnormal deformation or damage.
If a joint in a line is dirty with oil or the like, it means a leak or refrigerant, so inspect it with a gas leak detector.

4 Check the condenser

--- every 6 months

If condenser (1) become clogged with dirt or insects, their cooling efficiency is compromised.
Use tap water to wash away dirt and debris from the fins of condenser (1). Use a soft brush on stubborn dirt. Never use a hard brush as it will damage the fins.

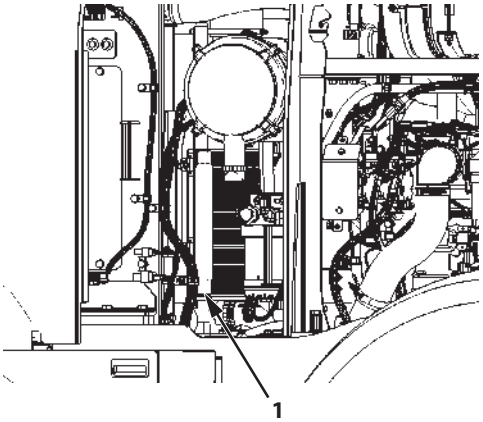

MNTL-07-051-1 ja

5 Check the Drive Belt

--- every 6 months

Check the belt tension and for belt damage.

Measure belt deflection by pressing down with 98 N (10 kgf) of force in the middle of the belt with a finger, as illustrated by the arrow ↓, with the engine stopped.
Deflection (A): approx. 6 mm

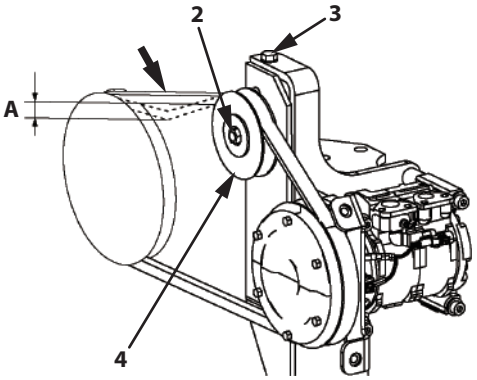

MNUD-07-058-1 ja

Adjusting Compressor Drive Belt Tension

1. Loosen lock nut (2) of tension pulley (4).
2. Move tensioner pulley (4) by turning tension adjustment bolt (3) of tensioner pulley (4) until belt tension is correct.
3. Securely tighten nut (2).

6 Check Refrigerant Level

--- every 6 months

IMPORTANT

Do not release refrigerant into the atmosphere. As this is illegal. Observe local regulations.

1. Start the engine and run it at an engine speed of 1500 min^{-1} (rpm).

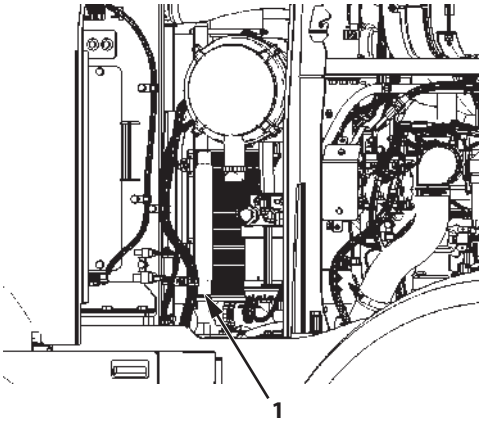

MNTL-07-051-1 ja

2. Turn the air conditioner switch to ON. Set the blower switch to HI and set the temperature control switch to the coolest position (18 °C on the monitor screen).
3. Operate the air conditioner for 2 to 3 minutes. Check if cool air comes out from the vent in the cab.
4. If there are any problems, have Authorized Dealer check receiver drier (1).

NOTE

This machine uses refrigerant R134a.

Type	*Refrigerant No.*	*Amount (kg)*
HFC	*R134a*	*0.75±0.05*

7 Replace the Air Conditioner Receiver Drier

--- as needed

NOTE

The dryer utilizes desiccant built into the condenser unit. It must be replaced every 16000 hours or 8 years, whichever comes first.

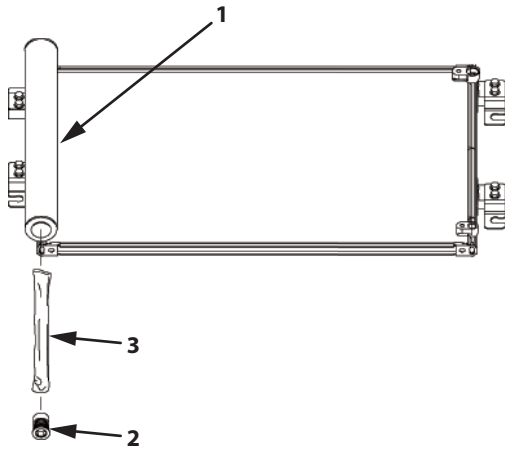

MNUD-07-060-1 ja

1. Remove bottom cap (2) using a 14 mm hex wrench.
2. Pull out dryer bag (3) containing the desiccant.

CAUTION

- **If tweezers are used, be careful not to damage the desiccant.**
- **Do not damage the bags while inserting them. Secure the bags in place to prevent them from clogging the filter.**

3. Insert 3 new dryer bags (3).

CAUTION

Do not apply oil to the cap threads.

4. Apply clean ND-8 or its equivalent on the cap O-ring (seal area).
5. Install new cap (2) making sure not to scratch it or get foreign matter on it.
   Cap (2) tightening torque: 4±1 N·m (0.4 ± 0.1 kgf·m)

8 Check the Compressor and Pulley

--- 1 time a year

Check around compressor for grime, its mounting condition, operation and gas leaks; listen for any abnormal noise from the pulley. Check belt deflection and for damage.

Check the Compressor

After operating the air conditioner for 5 to 10 minutes, touch both the high pressure pipe and the low pressure pipe.
If normal, the high pressure side pipe will be hot, and the low pressure side cold.

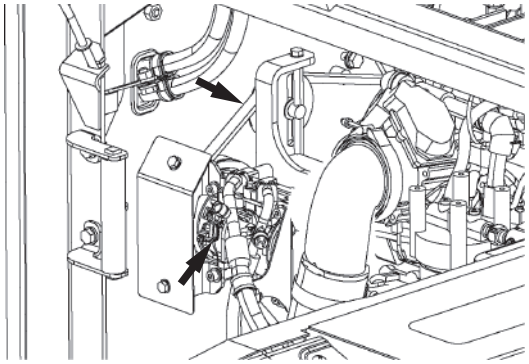

MNUD-07-047-1 ja

L. Aftertreatment Device

1 Check and Clean Muffler Filter Element

--- every 4500 hours

Consult Authorized Dealer.

2 Check and Clean Aftertreatment Device

--- as required

IMPORTANT

- **Check and clean away any flammable materials in the area around the aftertreatment device.**
- **Condensation may blow out from the exhaust port of the aftertreatment device and black deposition may be observed. This is not a malfunction.**

Do not disassemble the base machine support parts and sensors. If the machine is operated in dusty conditions refer to Chapter 9 “Maintenance Under Special Environmental Conditions”.

1. Open the right and left side covers.

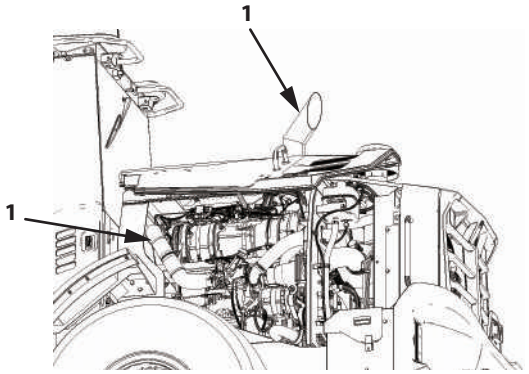

MNTL-07-052-1 ja

2. Check exhaust pipe (1) for cracks and holes. Check the aftertreatment device parts for looseness.
3. Check connectors and harnesses of Nox sensor (2), exhaust temperature sensor (3) and dosing module (4), and each connector and hose of differential pressure sensor (5) for abnormalities.
4. After checking, close the side cover.

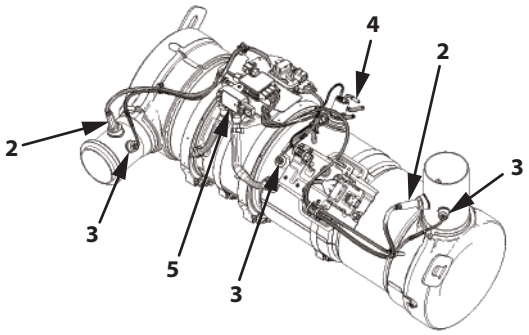

MNTL-07-053-1 ja

M. Urea SCR System

WARNING

Fill the DEF tank with the specified DEF. Filling it with a DEF other than that specified may cause a fire or breakdown. If improper liquid is refilled in the DEF tank, consult Authorized Dealer for inspection or repair.

Specified DEF

Refill DEF which meets Japanese Industrial Standards (JIS K2247), International Organization for Standardization (ISO 22241) or Deutsche Industrie Normen (DIN 70070) in DEF tank. If improper liquid (diesel oil, kerosene or gasoline) is refilled in the DEF tank, fire or system failure may result. The specified DEF is a colorless, odorless aqueous solution (urea 32.5%, water 67.5%) that starts to freeze at -11 °C. Store DEF at temperature between -10 and 40 °C.

The specified DEF may be called by one or more of the following names.

- Aqueous Urea Solution 32
- AUS 32
- NOx Reduction Agent
- Catalyst Solution

NOTE

AdBlue® is produced from suppliers which are licensed by the VDA (Verband der Automobilindustrie e.V). DEF (Diesel Exhaust Fluid) is certified by the API (American Petroleum Institute) Diesel Exhaust Fluid Certification Program.

CAUTION

- **DEF is an aqueous solution that is colorless, transparent and harmless; touching it generally does not cause any problems, but in rare cases, some people are irritated by it. If it comes in contact with skin, wash it off with plenty of water.**
- **If DEF is swallowed by mistake, drink 1 or 2 cups of water or milk and seek immediate medical attention.**
- **If DEF is accidentally splashed into the eyes, flush with water for 15 minutes or longer and get emergency medical attention.**

IMPORTANT

- **Use the special DEF containers recommended by suppliers who handle DEF. Do not use an ordinary container, contaminated or container used for other purpose as this will cause the quality of DEF to deteriorate.**
- **The DEF is non-combustible, however, move DEF to a safe place when fire occurs.**
- **Wash out spilled DEF with clean water.**
- **Seal the container and store it in a well ventilated place. If it accidentally gets frozen, the quality immediately after being frozen is not compromised. It can used as is. Do not store at high temperatures.**
- **As long as the DEF does not evaporate, there is not a problem with deterioration; if it is kept in a sealed container, there is no problem with storing it for a long time. It can used as is.**
- **Do not dispose of DEF or empty containers in places such as along the ocean, rivers, lakes, marshes, etc. When disposing DEF,make sure to let authorized industrial waste disposal contractor dispose of it appropriately.**

1 Check DEF/AdBlue®

--- daily

Park the machine on a firm, level surface and lower the bucket to the ground. Check the fuel level with DEF gauge (1).
If necessary, stop the engine and add DEF/AdBlue®.

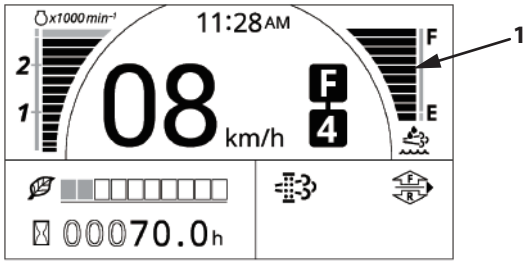

MNTL-MT-001-12 ja

Refill DEF/AdBlue®

CAUTION

- **Refill DEF/AdBlue® which meets Japanese Industrial Standards (JIS K2247), International Organization for Standardization (ISO 22241) or Deutsche Industrie Normen (DIN 70070) in DEF tank (2). If low density DEF/AdBlue® is refilled, an alarm will be generated, restricting machine operation. Do not dilute DEF/AdBlue® with water.**
- **Wear safety glasses or goggles, and rubber gloves appropriate to the job.**
  Wash off DEF/AdBlue® with clean water if it comes in contact with skin. If DEF/AdBlue® is splashed into the eyes, flush with water for 15 minutes or longer and seek emergency medical attention.

1. Park the machine according to the instructions listed in section (7-8) of “Preparations for Inspections and Maintenance”.
2. DEF tank (2) is located in the cover at left rear of the machine. Open the cover.
3. Clean dust and mud around the filler port of DEF tank (2) with a clean cloth.
4. Remove cap (3) from DEF tank (2) and refill DEF/AdBlue®. Be sure to stop refilling before reaching the FULL line (4) of the sticker label affixed to the tank.

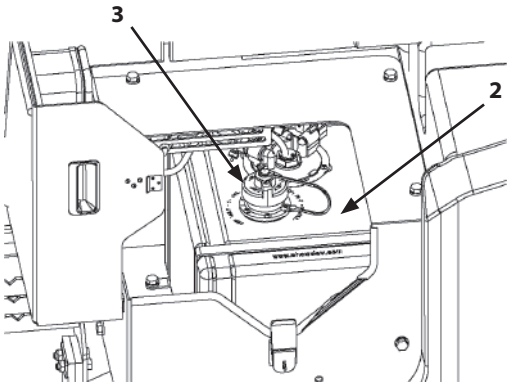

MNUD-07-031-1 ja

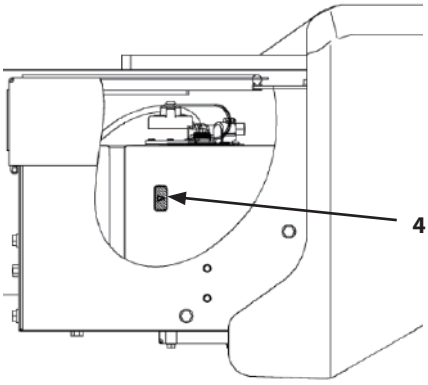

MNUD-07-064-1 ja

IMPORTANT

- **Take care not to allow dirt and/or water to enter the DEF tank while refueling.**
- **If DEF/AdBlue® is filled above the FULL line, the system may be damaged during operation or tank (2) may be broken when frozen.**

5. Install cap (3) after refilling DEF/AdBlue®. Close the tank cover.

IMPORTANT

- **Do not get on top of DEF tank (2) or sensors and piping on the tank. Failure to do so may damage the machine.**
- **When DEF/AdBlue® is dried naturally; White deposition may be observed, it is normal. Wash out DEF/AdBlue® deposition with soft water. Never use a high pressure washer.**

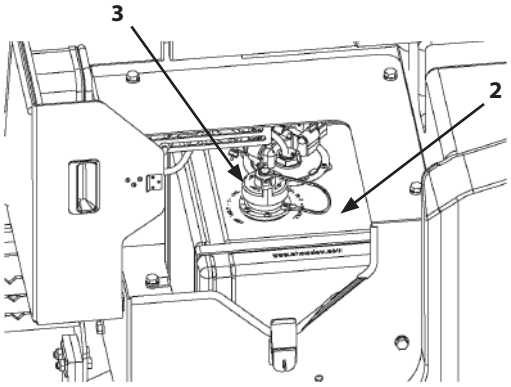

MNUD-07-031-1 ja

NOTE

- *Wipe spilled DEF/AdBlue® and wash spilled area with plenty of water.*
- *The sound of flowing fluid may be heard from the tank after the engine stops. It is the sound of returning DEF/AdBlue® from piping to the tank. This is not a malfunction.*
- *DEF/AdBlue® will freeze at low temperature, and deteriorate (ammonification) at high temperature. When storing unused DEF/AdBlue®, it is recommended to store it at temperature between -10 and 40 °C.*
- *Use dedicated container (purchased container) to store or carry DEF/AdBlue®. Alternatively use a polyethylene resin tank, or stainless steel tank.*

2 Change DEF/AdBlue®

--- as needed

CAUTION

Wear safety glasses and rubber globes appropriate to the job. Wash off DEF/AdBlue® with clean water if it comes in contact with skin. If DEF/AdBlue® is splashed into the eyes, flush with water for 15 minutes or longer and seek emergency medical attention.

IMPORTANT

When contaminated or deteriorated DEF/AdBlue® is used, malfunction may result. Change DEF/AdBlue® periodically to keep the inside of the tank clean.

1. Remove bolts (1) and washers, and remove cover (2).
2. Place a 50 L or larger container under drain plug (3).
3. Slowly loosen drain plug (3) to drain DEF/AdBlue®.
4. Tighten drain plug (3) after draining DEF/AdBlue®.

Hex wrench width across flats	: 6 mm
Tightening Torque	: 5 to 7 N·m (0.5 to 0.7 kgf·m)

5. Affix cover (2) with bolts (1) and washers.
6. Remove the cap from the DEF tank and fill with DEF/AdBlue®. (Refer to "Check DEF/AdBlue®" of 1 in section (7-125).)
   Tank Capacity: 33 L

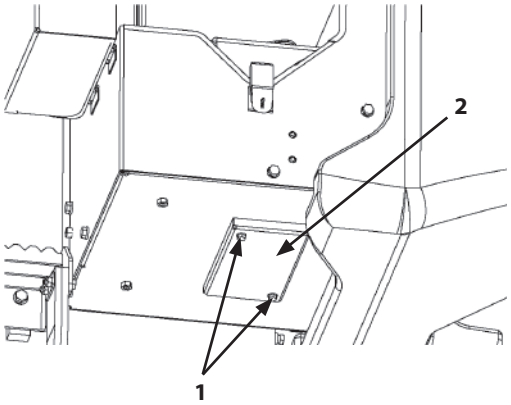

MNUD-07-032-1 ja

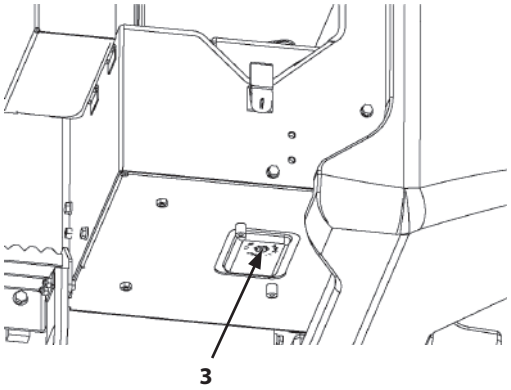

MNUD-07-033-1 ja

3 Replace DEF Supply Module Main Filter

--- every 4500 hours

A filter (2) is mounted in the DEF pump. Replace it at the specified interval.

CAUTION

Wear safety glasses or goggles, and rubber gloves appropriate to the job. Wash off DEF/AdBlue® with clean water if it comes in contact with skin. If DEF/AdBlue® is accidentally splashed into the eyes, flush with water for 15 minutes or longer and get emergency medical attention.

IMPORTANT

- **Take care not to allow dirt and/or water to enter the fuel tank.**
- **Check for leaks around the mounting position after replacement.**
- **When DEF/AdBlue® is dried naturally; White deposition may be observed, it is normal. Wash out DEF/AdBlue® deposition with soft water. Never use a high pressure washer.**

1. Park the machine according to the instructions listed in section (7-8) of “Preparations for Inspections and Maintenance”.
2. Open the side cover.
3. Remove cap (1) from the DEF pump by using a 27 mm, 12 point socket wrench.
4. Pull out filter (2) inside the pump. As it is tightly mounted, it can not be pulled out by hand. Use tools such as a pliers. When replacing the DEF supply module main filter, replace the filters (2) as a set.
5. Insert new filter (2) and tighten cap (1).
   Cap (1) tightening torque: 20±5 N·m (2.0±0.5 kgf・m)

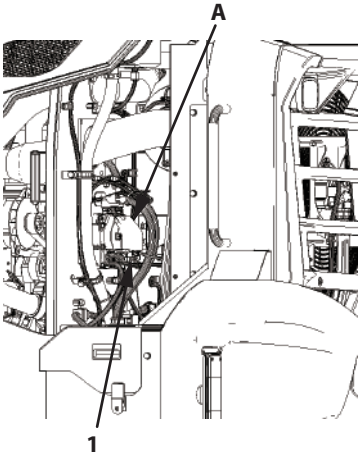

MNTL-07-055-1 ja

A: DEF Supply Module

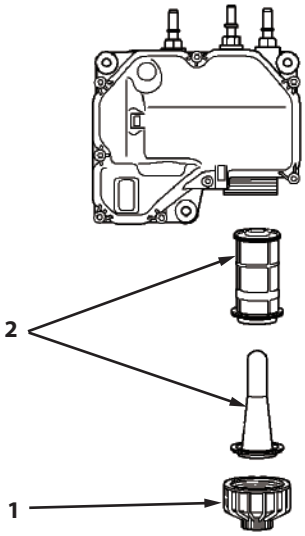

90B-MDC1-07-044-1 ja

4 Replace DEF Tank Water Supply Inlet Filter

--- every 4500 hours, or if DEF spills out while filling

IMPORTANT

Do not clean DEF tank water supply inlet filter (1). Clean around the cap to avoid DEF contamination when opening tank water supply inlet cap (2).

Locate filter (1) inside the DEF tank covering DEF tank water supply inlet cap (2). Replacement of filter (1) is required regularly or if DEF spills out while pouring it. When replacement is required, contact Authorized Dealer.

NOTE

Screw (3) tightening torque: 3.4 to 4.5 N·m (0.34 to 0.45 kgf·m)

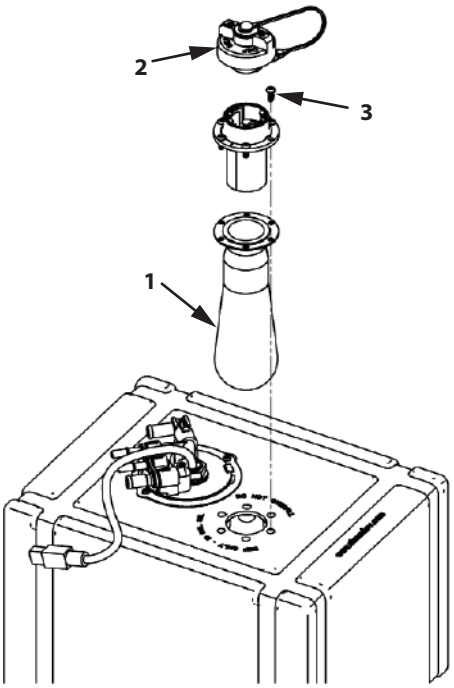

MNUD-07-052-1 ja

N. Miscellaneous

1 Check Bucket Teeth and Cutting Edge

--- every 10 hours

Check bucket teeth for wear and looseness.

Replace

WARNING

Guard against injury from flying pieces of metal.
Wear goggles or safety glasses, hard hat and face shield.

1. Raise the bucket to an appropriate height with the bucket bottom parallel to the ground. Insert blocks under the bucket to support it. Stop the engine.
2. Loosen bolts (1) and nuts (2). Remove bucket teeth (3) or cutting edge (4).
3. Install new teeth (3) or cutting edge (4). If the reverse side of a cutting edge is not worn much, use it again with the face reversed. If both sides are worn out, replace it with a new one.
4. Tighten nuts (2).

Tightening torque		
Cutting edge	:	1068 N·m (107 kgf·m)
Bucket teeth	:	1068 N·m (107 kgf·m)

5. Retighten mounting nuts (2) after a few hours of operation.

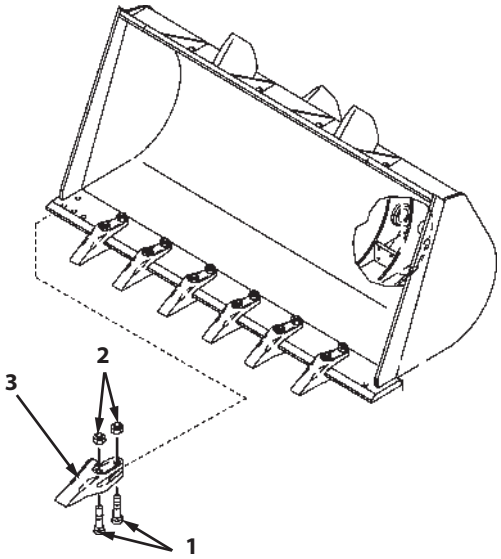

M4GB-07-115-1 ja

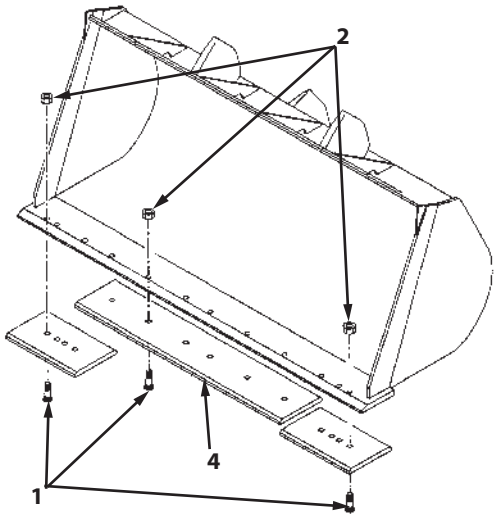

M4GB-07-116-1 ja

2 Check and Replace the Seat and Seat Belt

Check --- every 10 hours

Seat Belt Replace --- every 3 years

Examine tang (1), buckle (2) and the condition of the belt. If any part is damaged or worn, replace them.

Check the retracting mechanism as well. Replace the seat belt every 3 years regardless of its apparent condition.

Also, check the condition of the seat itself for any looseness or damage. If damaged replace it with a new one.

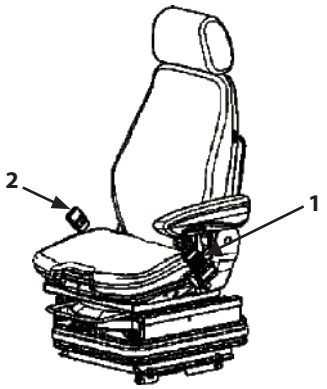

MNUD-01-049-2 ja

3 Check ROPS Cab and Resin Cab Roof Damage, Loose Bolts

--- every 10 hours

Check the appearance of ROPS cab (3) and resin cab roof (4) for any abnormal damage or deformation.

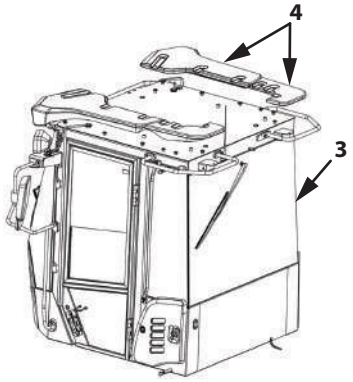

MNTK-07-014-1 ja

4 Check Level of Washer Fluid

--- every 10 hours

IMPORTANT

- **When refilling, take care that no foreign matter gets inside.**
- **Use a washer fluid with antifreeze in cold areas.**

Check the level of washer/wiper fluid and add if low.

NOTE

The location of the windshield washer fluid tank will depend on the machine models.

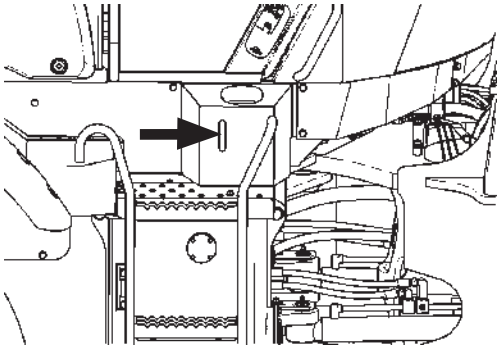

MNDF-07-034-1 ja

5 Check the Amount of Play in Steering Wheel

--- every 10 hours

WARNING

While checking, stay clear of the area between the front and rear frames. Turning the steering wheel makes the area between the front and rear frames narrower, presenting the risk of someone getting caught in between.

Check that play (1) in steering wheel is correct and that tilt telescopic lever (2) and flip-up pedal (3) are securely held in place. Check that when the steering wheel is turned all the way, the chassis hits the stoppers and nothing is abnormal in steering cylinder operation.

1. Start the engine. Put the parking brake switch in the ON position.
2. Slightly lift the bucket above the ground. Place the control lever lock switch in the LOCK position.
3. Measure steering wheel play (1). While running the engine at slow idle speed and slightly turn the steering wheel knob back and forth. Check that the handle play amount (1) from this test is within the standard value range. If too much play (1) in the steering wheel is found or if the steering wheel does not move smoothly, consult Authorized Dealer to have it inspected.

   Standard value :5 to 15 mm

NOTE

Steering wheel play (1) is the distance the steering knob moves without the steering cylinder moving. Check the distance before the steering wheel actuates by moving the bucket and/or tires. The amount of steering wheel play (1) is measured by the amount of circumferential movement of the steering wheel.

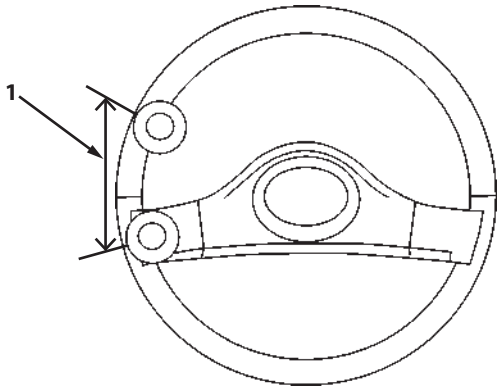

MNEC-07-050-1 ja

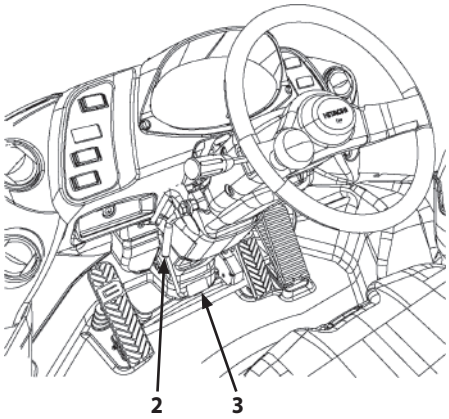

MNUD-01-009-11 ja

6 Accelerator Pedal Operation, Color and Sound of Exhaust Gas

--- every 10 hours

WARNING

A serious accident may occur due to unexpected movement of the machine. Before inspecting, put the F-N-R lever in NEUTRAL, engage the parking brake, set the bucket so it sits level on the ground and chock the tires.

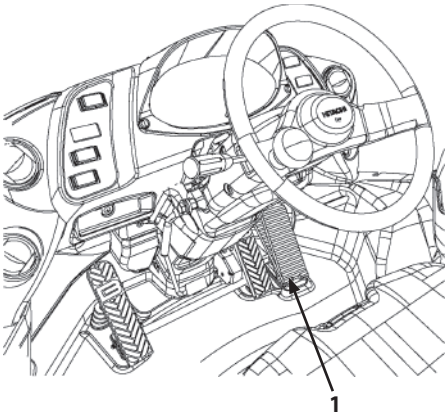

MNUD-01-009-12 ja

Operate accelerator pedal (1), gradually pressing it in; the engine speed should increase smoothly. Similarly, the engine speed should drop smoothly as the pedal returns.

If dirt, sand or other debris has accumulated around accelerator pedal (1), clean it out.

Color and Sound of Exhaust Gas

Check the condition and sound of the exhaust gas.

DANGER

Provide sufficient ventilation when warming up the machine indoors. Doing so in a closed environment may lead to exhaust gas poisoning and death.

IMPORTANT

This machine is equipped with an engine that complies with the Stage V vehicle emissions regulations. Never attempt to modify the engine intake or exhaust systems.

Exhaust gas color is normally transparent or light blue. The exhaust may appear white briefly when the engine is started due to water vapor, but this is normal.

If the exhaust is black, white, brown or gray, check the engine oil level, the fuel supply system, aftertreatment device, etc. Also, listen to the sound from the engine and aftertreatment device for any abnormal noises.

7 Damage or Looseness of Rear View Mirrors

--- every 10 hours

Check that windshield rear view mirror (1) and rear view mirror (2) are facing a correct direction, and that they are clean and undamaged.

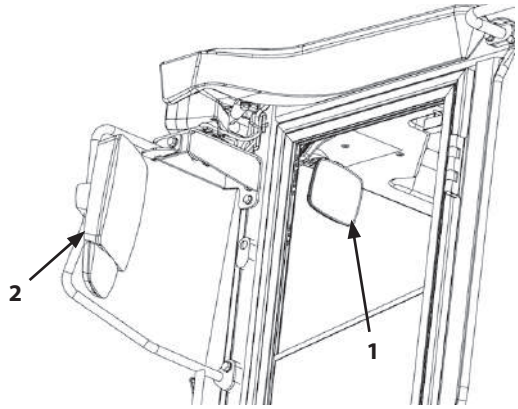

MNTK-01-031-1 ja

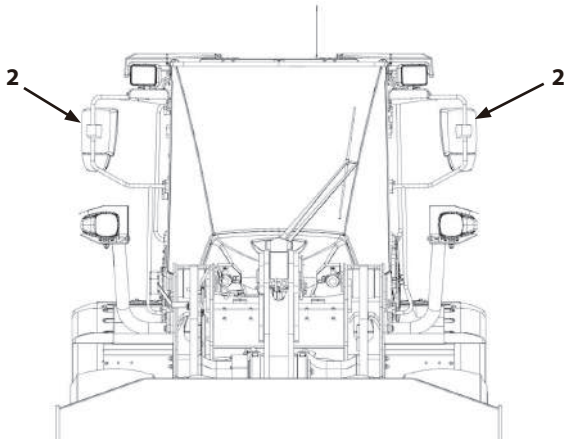

MNTK-01-011-3 ja

8 Damage or Looseness of Steps, Handrails and Cab Top Rails

--- every 10 hours

Check steps (1), handrails (2) and cab top rails (3) for any damage, looseness and dirtiness.

If machine lubricants, mud or any other slippery substances are stuck to steps (1), handrails (2) and/or cab top rails (3), remove it.

If steps (1) and/or handrails (2) are so damaged or loose that getting on/off the machine is difficult, immediately repair or replace them. If cab top rail (3) is so damaged or loose that the operator's safety while servicing the machine is compromised, immediately repair or replace it.

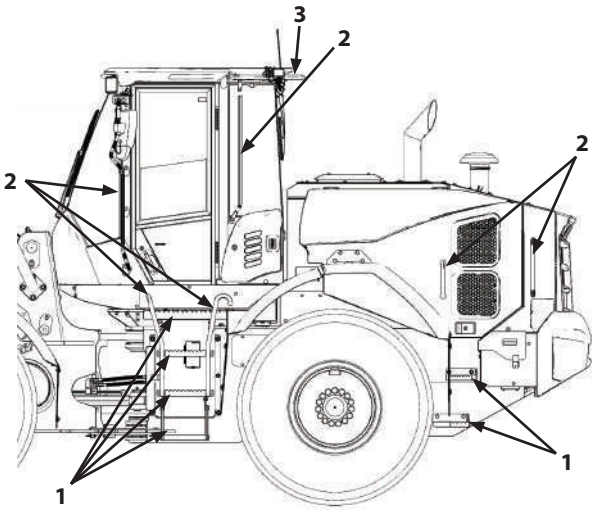

MNTL-01-035-2 ja

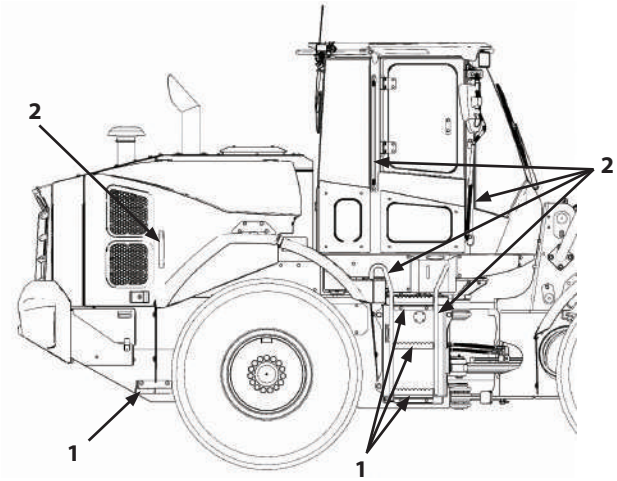

MNTL-01-037-1 ja

9 Clean Engine Compartment and Engine Cover

--- every 10 hours

CAUTION

If debris or wood chips accumulate around the engine cover or engine compartment, they may come in contact with hot parts there and lead to a fire.

Remove any debris or wood chips on the engine cover.

Open the side cover and check for debris or wood chips inside the engine compartment and on top of the engine; remove any accumulated debris.

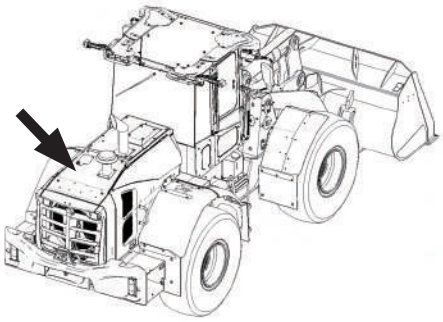

MNTL-07-063-1 ja

10 Clean Rear View Camera and Side Camera (Optional)

--- every 10 hours

Oil, dust, and moisture may obscure the image the camera lens image. Clean the lens if the image is blurry.

IMPORTANT

- **Never use an organic solvent to clean the camera lens.**
- **Do not apply excessive force as it may damage the camera.**

Gently wipe lens (1) of the rear view camera with a damp cloth.

NOTE

If side cameras (2) and (3) are installed, clean them just like rear view camera (1).

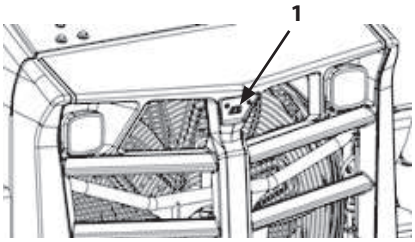

MNTK-01-009-1 ja

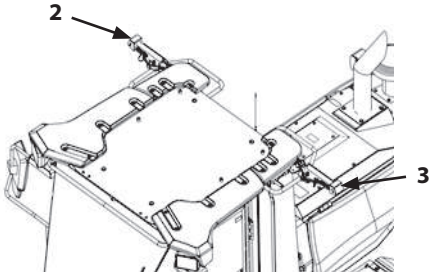

MNTK-01-010-2 ja

11 Inspect and Adjust Valve Clearance

--- every 4500 hours

Contact Authorized Dealer for check or repair.

12 Retighten the Front Axle Mounting Bolts and Rear Axle Support Mounting Bolts

--- every 2000 hours (first time only, after 50 hours)

Check front and rear axle support mounting bolts for looseness.

Tightening Torque

Front axle mounting bolt	Rear Axle Support Mounting Bolt (Front)	Rear Axle Support Mounting Bolt (Rear)
950 N·m (95 kgf·m)	550 N·m (55 kgf·m)	950 N·m (95 kgf·m)

13 Tighten and Retighten Nuts and Bolts

--- every 250 hours (first time only, after 50 hours)

Tighten or retighten nuts and bolts used on this machine in accordance with the torque values shown in the following table(7-141). Check for missing and loose bolts and nuts before and after your daily shift. Retighten those that are loose, and replace those missing.

Check and retighten after the first 50 hours, then every 250 hours.

For retightening nuts and bolts other than specified in the table below (7-141), refer to the “Tightening Torque Chart” (7-142) at the end of this section.

Replace any damaged nuts or bolts.

No.	Place to Retighten			Bolt Dia	Qty.	Wrench size	Torque	
							N·m	(kgf·m)
1.	Front axle mounting bolt			24	8	36	950	(95)
2.	Rear axle support mounting bolt		Front	20	4	30	550	(55)
			Rear	24	4	36	950	(95)
3.	Wheel rim mounting bolt			24	60	36	890	(89)
4.	Propeller shaft mounting bolt			10	20	17	74 *1	(7.4) *1
5.	Propeller shaft support bearing mounting bolt			16	2	24	210 *1	(21.0) *1
6.	Transmission mounting bolt		Bracket	16	8	24	210 *1	(21.0) *1
			Rubber cushion	18	4	27	315	(31.5)
7.	HST motor mounting bolt			16	8	24	210	(21.0)
8.	HST pump mounting bolt			16	8	24	210	(21.0)
9.	Engine mounting bolt	Bracket	Front	12	12	19	90 *1	(9.0) *1
			Rear	12	6	19	90 *1	(9.0) *1
		Rubber cushion		16	4	24	210	(21.0)
10.	Aftertreatment device mounting nut (Double)			10	8	17	20	(2.0)
11.	Counterweight mounting bolt			30	4	46	1510	(151)
12.	Top center pin upper flange lock			16	3	24	210 *1	(21.0) *1
13.	Lower center pin rotation block			16	1	24	210	(21.0)
14.	Loader front pin rotation block			16	3	24	210	(21.0)
				12	10	17	90	(9.0)
15.	Steering cylinder pin rotation block			12	4	19	90	(9.0)
16.	Radiator frame mounting bolts			16	6	24	154 *1	(15.5) *1
17.	Radiator mounting bolt			8	2	13	17.6	(1.8)
18.	Intercooler mounting bolt			8	1	13	17.6	(1.8)
19.	Oil cooler mounting bolt			10	4	17	36.2	(3.6)
20.	Air conditioner condenser mounting bolt			8	4	13	12.5	(1.3)
21.	Air conditioner compressor mounting bolt			8	4	6	24.5～29.4 *1	(2.5～2.9) *1
22.	Cab cushion rubber mounting bolt			16	4	24	205 *1	(20.5) *1
23.	Cutting edge mounting bolt		ZW140-7	1" *2	7	1 1/2 *2	1068	(107)
			ZW160-7,160PL-7		8			
24.	Bucket tooth mounting bolt (Optional)		ZW140-7	1" *2	14	1 1/2 *2	1068	(107)
			ZW160-7,160PL-7		16			
25.	Battery mounting nut		Double nut (Upper)	10	2	17	50	(5.0)
			Double nut (Lower)	10	2	17	10	(1.0)

IMPORTANT

***1 Apply Loctite® #262.**

***2 The bolt diameter is shown in inches.**

Tightening Torque Chart

Bolt Dia. mm	Hexagon Bolt							Socket Bolt		
	10.9 Ⓣ T		8.8 Ⓗ H		7 M		Wrench size mm	Socket Bolt		Wrench size mm
	N·m(kgf·m)		N·m(kgf·m)		N·m(kgf·m)			N·m	(kgf·m)	
6					3.3 to 4.2 (0.3 to 0.4)		10			5
8	30	(3.0)	20	(2.0)	10	(1.0)	13	20	(2.0)	6
10	65	(6.5)	50	(5.0)	20	(2.0)	17	50	(5.0)	8
12	110	(11)	90	(9)	35	(3.5)	19	90	(9)	10
14	180	(18)	140	(14)	55	(5.5)	22	140	(14)	12
16	270	(27)	210	(21)	80	(8.0)	24	210	(21)	14
18	400	(40)	300	(30)	120	(12)	27	300	(30)	14
20	550	(55)	400	(40)	170	(17)	30	400	(40)	17
22	750	(75)	550	(55)	220	(22)	32			
24	950	(95)	700	(70)	280	(28)	36			
27	1400	(140)	1050	(105)	400	(40)	41			
30	1950	(195)	1450	(145)	550	(55)	46			
33	2600	(260)	1950	(195)	750	(75)	50			
36	3200	(320)	2450	(245)	950	(95)	55			

CAUTION

If the mounting bolts for counterweights are loose, consult Authorized Dealer.

IMPORTANT

- **Apply lubricant (e.g. white zinc B dissolved into spindle oil) to new bolts and nuts before tightening them.**
- **Remove soil, dust, and/or dirt from the nut and bolt thread surfaces before tightening.**
- **Tighten nuts and bolts to specifications. If tightened with excessively low or high torque, missing or breakage of nuts and/or bolts may result.**

1. Front axle mounting bolt

2. Rear axle support mounting bolt

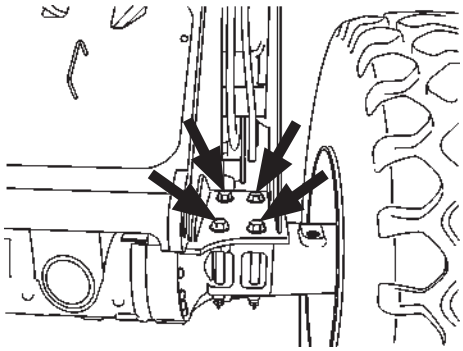

MPTC-07-046-1 ja

Front

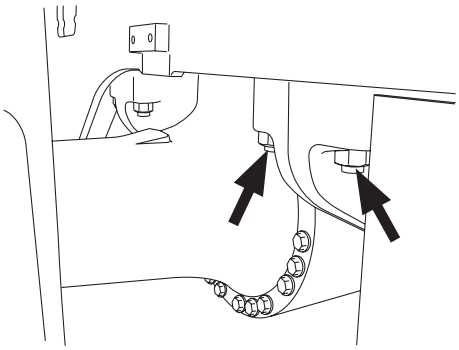

M4GB-07-125-2 ja

Rear

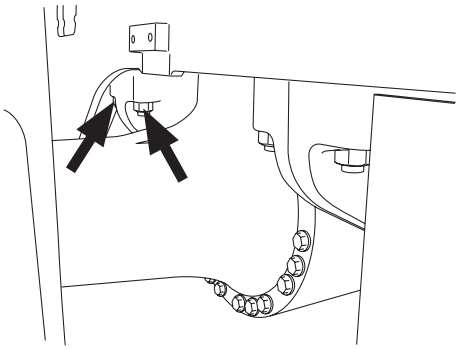

M4GB-07-125-3 ja

3. Wheel rim mounting bolt

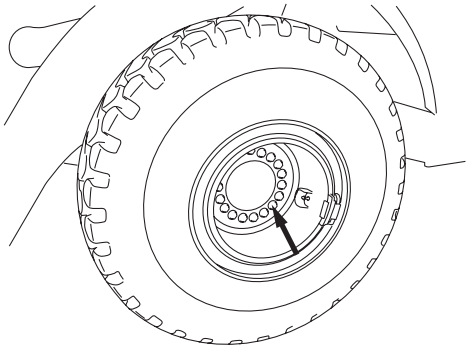

M4GB-07-127-1 ja

4. Propeller shaft mounting bolt

IMPORTANT

Apply Loctite® #262.

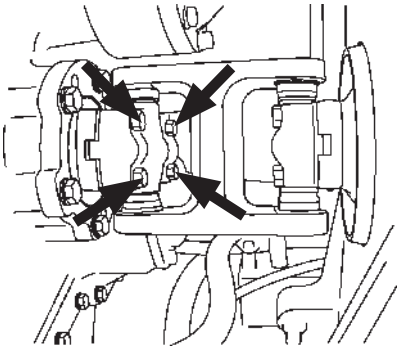

M4FC-07-066-1 ja

5. Propeller shaft support bearing mounting bolt

IMPORTANT

Apply Loctite® #262.

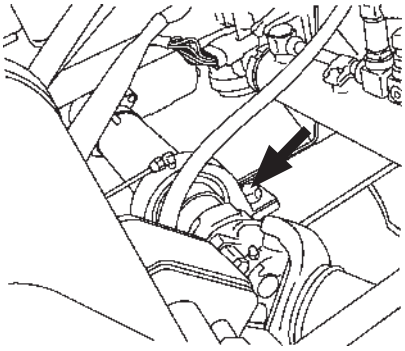

M4FC-07-011-2 ja

6. Transmission mounting bolt
   Bracket

   IMPORTANT

   Apply Loctite® #262.

   Rubber cushion

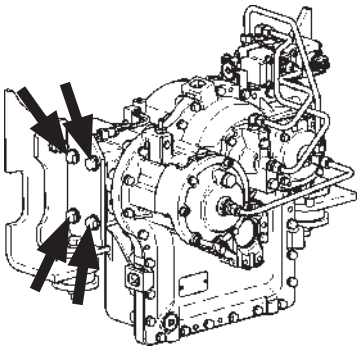

MNDF-07-039-1 ja

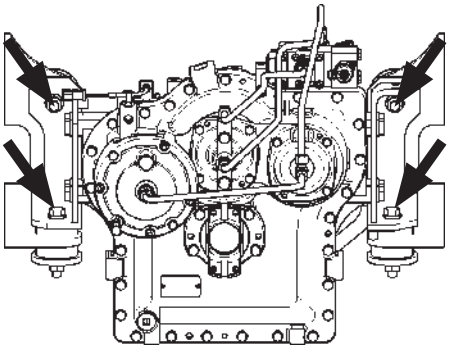

MNDF-07-040-1 ja

7. HST motor mounting bolt

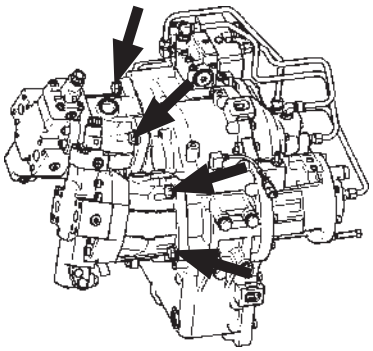

MNDF-07-041-1 ja

8. HST pump mounting bolt

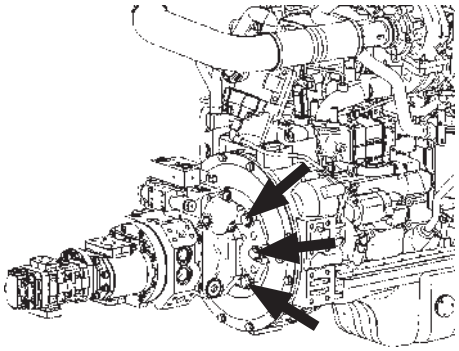

MPTC-07-043-1 ja

9. Engine mounting bolt
   Bracket (Front)

   IMPORTANT

   Apply Loctite® #262.

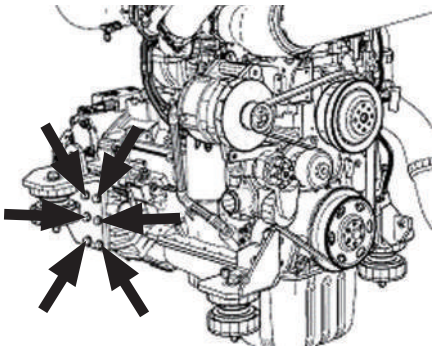

MNTL-07-054-1 ja

   Bracket (Rear)

   IMPORTANT

   Apply Loctite® #262.

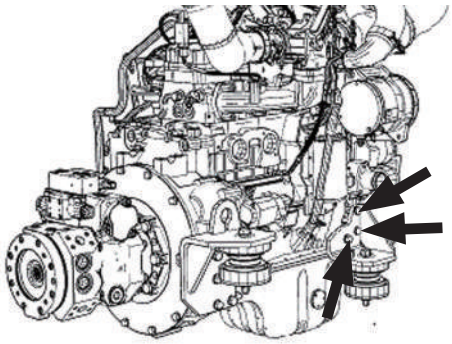

MNTL-07-064-1 ja

   Rubber cushion

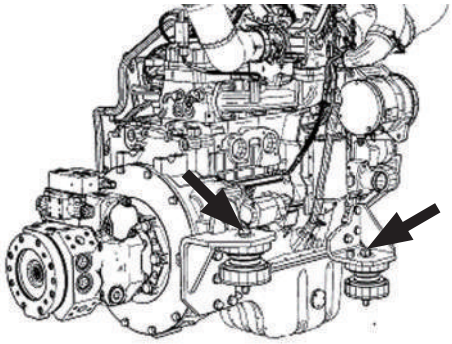

MNTL-07-064-2 ja

10. Aftertreatment device mounting nut (Double)

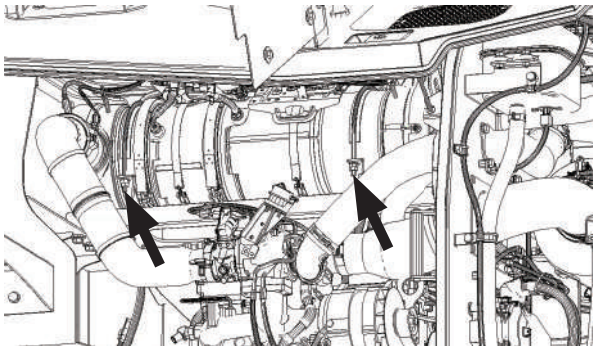

MNTL-07-056-1 ja

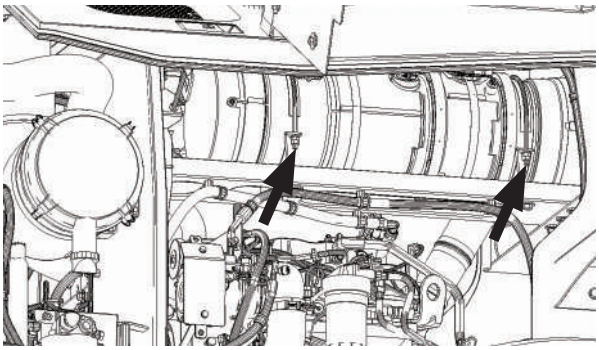

MNTL-07-057-1 ja

11. Counterweight mounting bolt

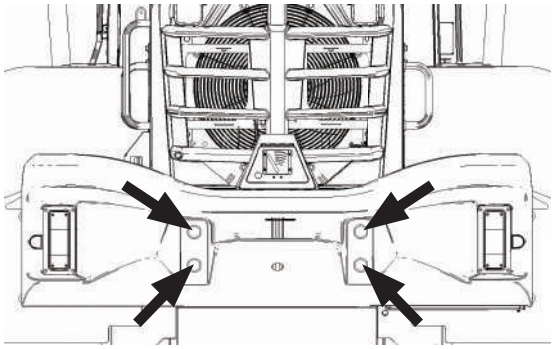

MNTL-07-058-1 ja

12. Top center pin upper flange lock

IMPORTANT

Apply Loctite® #262.

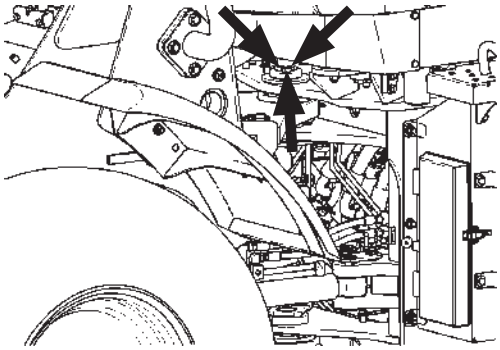

MNDF-07-045-1 ja

13. Lower center pin rotation block

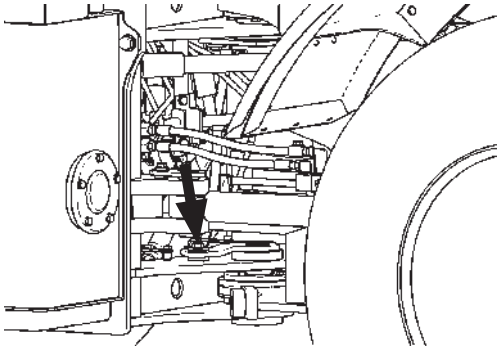

MNDF-07-046-1 ja

14. Loader front pin rotation block

		A	B
Bolt Diameter		16	12
Qty.	ZW140-7, 160-7	3	10
	ZW160PL-7	10	30

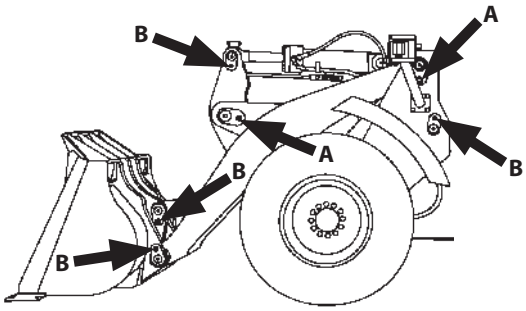

ZW140-7, 160-7

M4FC-07-075-1 ja

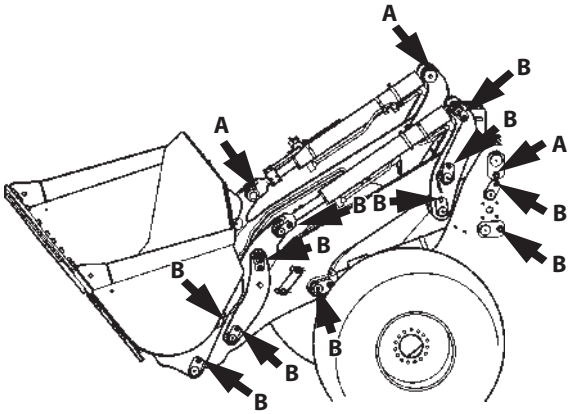

ZW160PL-7

M4GB-07-180-12 ja

15. Steering cylinder pin rotation block

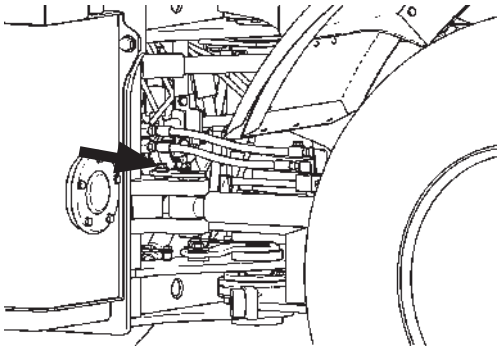

MNDF-07-046-2 ja

16. Radiator frame mounting bolts

IMPORTANT

Apply Loctite® #262.

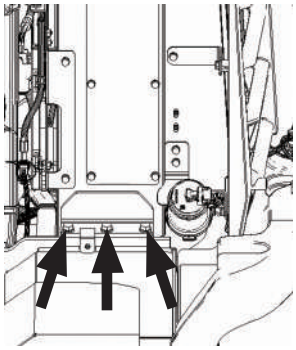

MNTL-07-059-1 ja

17. Radiator mounting bolt

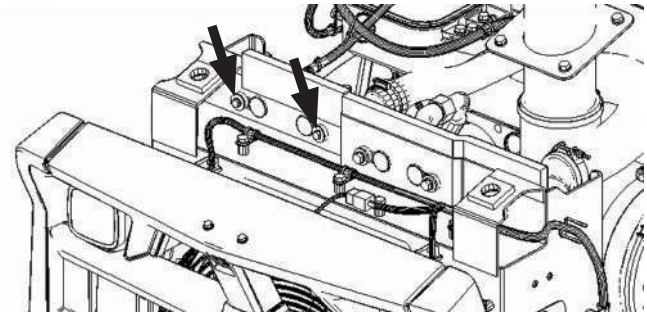

MNTL-07-060-1 ja

18. Intercooler mounting bolt

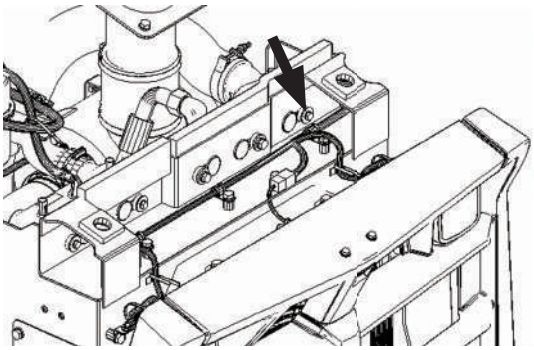

MNTL-07-061-1 ja

19. Oil cooler mounting bolt

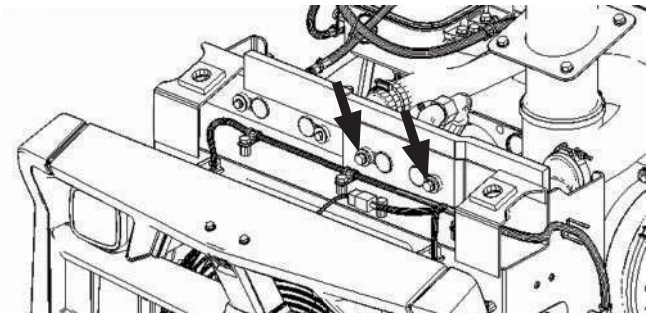

MNTL-07-060-2 ja

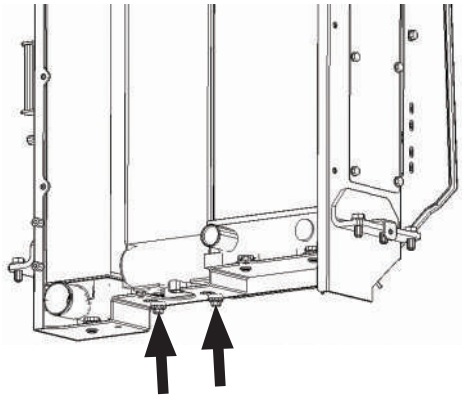

MNTL-07-062-1 ja

20. Air conditioner condenser mounting bolt

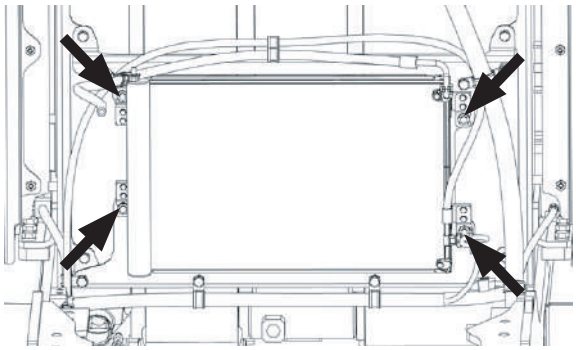

MNTK-07-027-1 ja

21. Air conditioner compressor mounting bolt

IMPORTANT

Apply Loctite® #262.

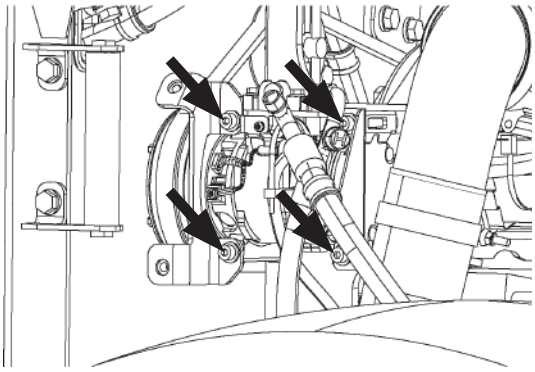

MNUD-07-059-1 ja

22. Cab cushion rubber mounting bolt

IMPORTANT

Apply Loctite® #262.

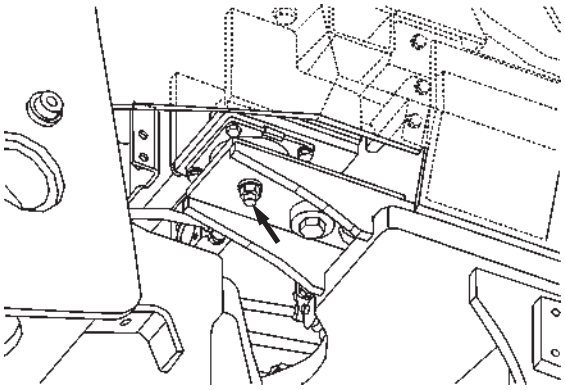

MNEC-07-066-1 ja

23. Cutting edge mounting bolt

ZW140-7	7
ZW160-7	8

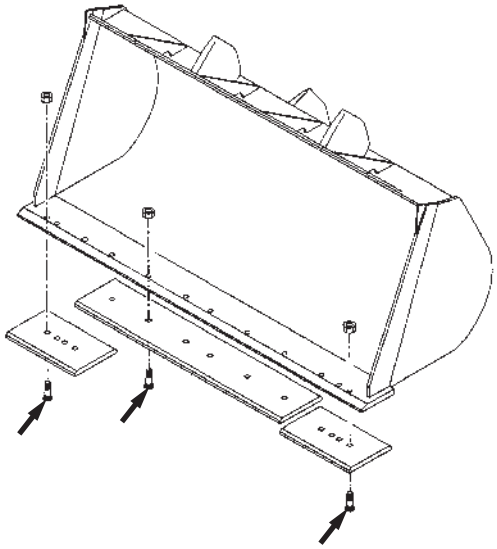

M4GB-07-116-2 ja

24. Bucket tooth mounting bolt (Optional)

ZW140-7	14
ZW160-7	16

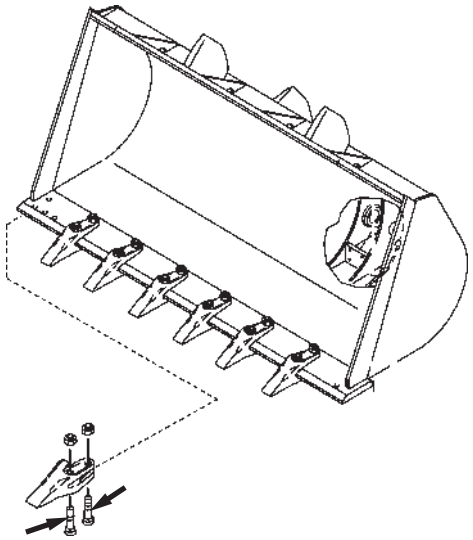

M4GB-07-115-2 ja

25. Battery mountihg nut

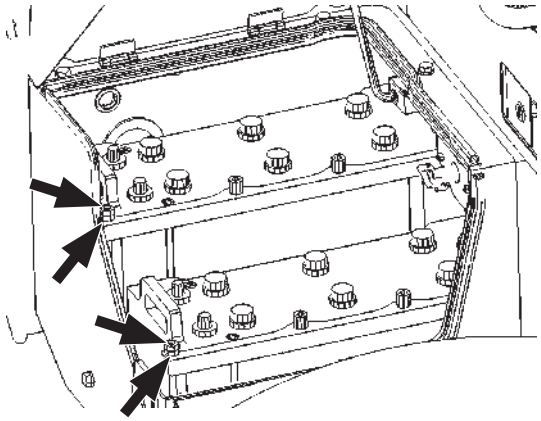

MNTL-07-067-1 ja

14 Daily Check of Camera Images for Aerial Angle (Optional)

--- daily (before starting the engine)

1. Turn key switch (1) to the ON position.
2. Rotate selector knob (2) and check that the image changes on sub monitor (3).
3. Set sub monitor (3) to display an image of the area around the machine and check that all the camera images are being output, and that there is no visibility problem with the image.

IMPORTANT

- **If the image is unclear, clean the lenses of the camera(s) and/or the monitor to make it clearer. Always ensure good footing when cleaning the cameras.**
- **If cleaning the camera lenses and monitor does not improve visibility, or if part of the image is missing, consult Authorized Dealer.**

NOTE

The surfaces of sub monitor (3) and the camera lenses are made of plastic. When cleaning them, use a clean, water-dampened cloth and wipe lightly. Never use an organic solvent.

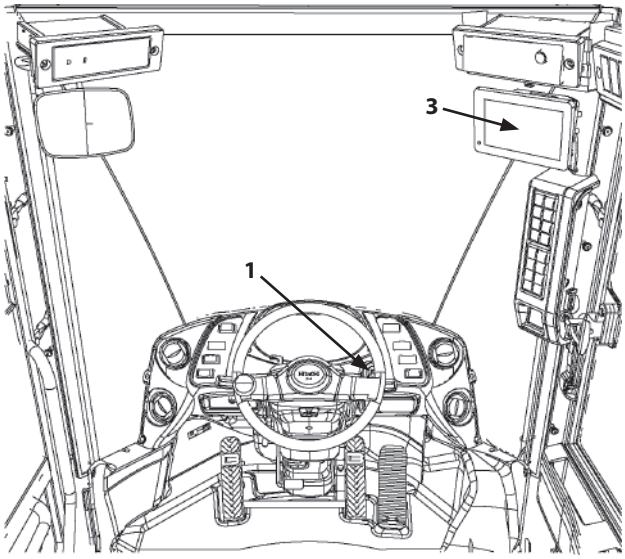

MNUD-01-008-7 ja

MNTL-01-094-1 ja

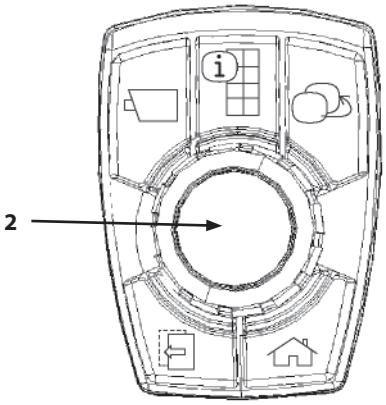

MNUD-01-252-12 ja

15 Check Aerial Angle Camera Image (Optional)

... after performing work that affects the installation position of the cameras

IMPORTANT

It may be necessary to reconfigure the cameras if any work is done that affects camera installation positioning (such as removing/reinstalling camera brackets, counterweights, or replacing a camera). Follow the inspection method below to check whether the camera images are being displayed normally.

MNTL-01-094-1 ja

Turn key switch (1) ON and check that there are no problems with the surrounding image of the machine.

16 Check and Clean Rear Obstacle Detection Sensor Face (Optional)

--- daily (before starting the engine)

IMPORTANT

The obstacle detection system is designed to enhance the operator's awareness of the machine surroundings. Use of this system does not replace basic safety precautions and procedures for operating the machine.

Inspect Radar Object Detection (ROD) system sensor face (1) for any dirt, mud, snow, ice, or debris buildup.

Clean the sensor face when needed.

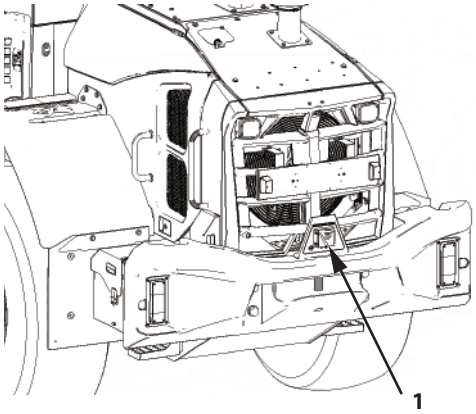

MNTL-01-058-2 ja

17 Check Rear Obstacle Detection Sensor System Operation (Optional)

--- when work is done that affects the mounting position of the sensor

IMPORTANT

Perform operational check of Radar Object Detection (ROD) system properly.

There are 2 types of rear obstacle detection and warning screens, and buzzer patterns. Before checking, verify the rear obstacle detection warning type from the appearance of the sub monitor standard screen. For details, refer to “Items Displayed on the Sub Monitor Basic Screen” on page (1-68).

1. Select "Setting" - "Rear Obstacle Alarm Setting" from the sub monitor main menu. Set the rear obstacle alarm setting to OFF, and check that ROD buzzer OFF icon (2) is displayed on the sub monitor. For details on how to do the setting, refer to “Rear Obstacle Alarm Setting ON/OFF (Optional)” in the chapter “Operator's Station” on page (1-108).
2. Set the rear obstacle alarm setting to ON, and check that ROD buzzer OFF icon (2) turns off.
3. Place a large enough obstacle at about 4 m behind the machine.
4. With the rear obstacle alarm setting ON, place the shift lever in the 1st reverse gear (R1).
5. Verify that the buzzer sounds and the display shows that the obstacle was detected with icon (3).
6. Move the machine closer to the obstacle. Verify that the buzzer gets louder and longer indicating that the obstacle is getting closer. The distance to the obstacle can be verified via the monitor graph on the sub monitor.

IMPORTANT

There are 2 types of obstacle detection system screens. The displays for the buzzer pattern and leveler bar differ depending on the type of screen. Before checking, verify the type of obstacle detection system from the appearance of the sub monitor standard screen. For details, refer to “Rear Obstacle Detection and Warning” on page (1-71).

A Type

Level	Monitor Graph	Buzzer Sound	
		Rear Obstacle Alarm Setting ON	Rear Obstacle Alarm Setting OFF
1	A	No buzzer	No buzzer
2	B	Soft short beep	No buzzer
3	B	Loud long beep	Loud long beep
4	C	Loud long beep	Loud long beep

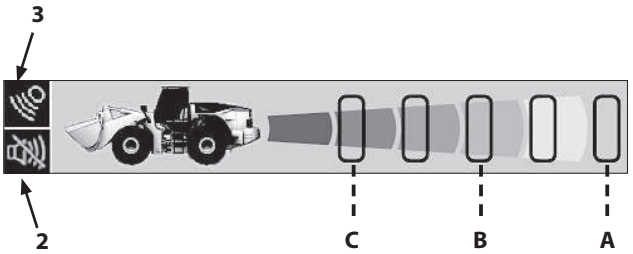

MNUD-01-314-3 ja

B Type

Level	Monitor Graph	Buzzer Sound	
		Rear Obstacle Alarm Setting ON	Rear Obstacle Alarm Setting OFF
1	A	No buzzer	No buzzer
2	B	Slow short beep	No buzzer
3	C	Quick short beep	Quick short beep
4	D	Long beep	Long beep

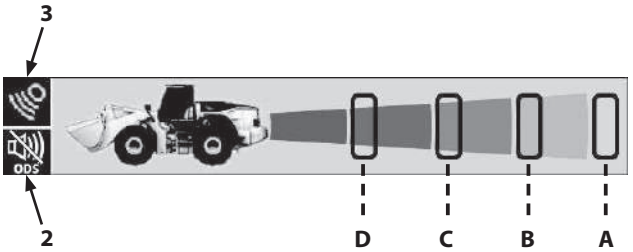

MNTL-01-242-3 ja

Maintenance Under Special Environmental Conditions

WARNING

- **Before operating the machine in a river, survey the riverbed conditions beforehand.**
- **Do not driving the machine into a river where the riverbed is steep and deep or the current is strong.**

Operating Conditions	Caution	
Muddy Soil, Rainy or Snowy Weather	Before Operation	: Check the tightness of all plugs and drain shutoff-valves.
	After Operation	: Clean the machine and check for cracks and damage. Check for loose or missing bolts and nuts. Lubricate all necessary parts promptly. Should the machine be submerged in water deeper than approximately 450 mm, water will get into the brake device (parking brake), etc. resulting in poor braking performance. Exercise extreme caution when departing in the machine.
Near the Ocean (or near chemical treatment facility)	Before Operation	: Check the tightness of all plugs and drain shutoff-valves.
	After Operation	: Clean the machine thoroughly to wash off salt. Service electrical equipment often to prevent corrosion.
Dusty Atmosphere	Air Cleaner	: Replace the element at shorter service intervals.
	Radiator	: Clean the dust from fins to prevent clogging of the radiator core.
	Fuel, DEF systems	: Clean the strainer and filter at shorter service intervals.
	Electrical Equipment	: Clean them regularly, especially, the commutator surfaces of the alternator and starter.
	Engine, Aftertreatment Device	: Clean often to prevent dust from building up and sticking. Inhibit the aftertreatment device regeneration according to the machine operating condition.
Rocky Ground	Undercarriage	: Check for damage on tires, wheels, and axles. Check for loose, cracked, worn, and damaged bolts and nuts.
	Loader front attachment	: Heavy-duty work may damage the standard attachment. Consult Authorized Dealer about reinforcing the attachment before using it, or using a heavy duty attachment.
Freezing Weather	Fuel	: Use high quality fuel designed for low temperature. Check for fuel tank breather pipe freezing.
	Lubricant	: Use high quality low viscosity hydraulic oil and engine oil.
	Engine Coolant:	: Be sure to use antifreeze.
	Battery	: Fully charge more often than normal. If not charged fully, electrolyte may freeze.
	Tires and Frame	: Keep the tires and frame clean. Park the machine on a hard and level surface to prevent the tires from freezing to the ground.
	DEF	: DEF will more than likely freeze, but the machine can be operated normally.
When handling old paper and/or industrial waste	Engine Compartment	: Remove old paper and/or waste accumulated around the radiator and in the engine compartment. Failure to do so may cause the machine to overheat or fires.
	Air Cleaner	: Replace the element at shorter service intervals.
	Fuel System	: Clean the filter and element at shorter service intervals.
	Base Machine	: Remove paper and debris that accumulates around the frame and attachment. Failure to so may damage the machine.
	Radiator	: Clean as often as possible to prevent corrosion due to chemicals.

IMPORTANT

If the target material is a corrosive substance (i.e. salt, chemicals), consult Authorized Dealer. The machine may need to be specially modified or customized. If the machine continues to be used as-is, corrosion could lead to a malfunction.
Consult Authorized Dealer if the machine will be operated in other types of special conditions.

Operation in Freezing Weather

There are many things to consider when working in freezing weather, particularly before the temperature drops below 0°C.

- Water and oil in the machine will freeze.
- Road surfaces will freeze and the tires may slip.

Prepare the following with the above points in mind.

1. Refill water and lubricants prior to work, not after. (Except for fuel)
2. Mix LLC in the radiator (coolant). This wheel loader is shipped from the factory with LLC (long life coolant) in it. Which means, this machine can operate normally in an area without any problem.
3. Replace the engine oil with freeze-resistant oil.
4. Use a fuel (diesel fuel) with low-temperature characteristics. To prevent water condensation from forming on the inner wall of the fuel tank, complete the wheel loader task, but make sure the fuel tank is less than half full. Then, top off the tank with winter diesel fuel.
5. If the electrolyte in the battery freezes, the battery case will be damaged. Keep the battery fully charged. After completing work, turn all lights OFF and let the cooler run for 5 minutes.
   Another option is to remove the battery and store it in a warm area indoors. If it is possible to measure and adjust the specific gravity of the electrolyte, increase its specific gravity to 1.280. Do not increase specific gravity beyond 1.280.
6. Use a freeze-resistant washer fluid.

After finishing the above measures, start running and doing tasks with the machine.

DANGER

Provide sufficient ventilation when warming up the machine indoors. Warming up the machine in a closed environment may lead to exhaust gas poisoning and death.

7. Preheat the engine first, then start it. Warm up the engine properly.
8. After warming up the engine, warm up the front attachment. Slowly operate the front attachment control levers to move the cylinders full stroke several times.
9. Road surfaces covered with snow, especially when snow has been compacted, will become frozen. Attach tire chains on the 4 wheels.
10. Take steps to protect against freezing after finishing work.
    - Cover the keyhole with tape.
    - Rubber parts such as windshield wipers may freeze. Keep other parts away from rubber parts.
    - Use a bar or brush to remove packed snow from around the undercarriage and inside the machine.
    - If the machine cannot be stored indoors, park it on a level dry surface and cover the entire machine with a large plastic tarp.
    - When storing DEF in an environment colder than -10°C, fill the tank to about 80% of its capacity with DEF. Do not fill it all the way. When DEF freezes it can damage the tank.

Storing the Machine

WARNING

- **If lubricating the machine indoors cannot be avoided, ventilate the building properly by opening windows and doors to prevent poisoning by exhaust fumes.**
- **Lubricant properties will deteriorate even if the machine is kept stored. Check all lubricants before operating the machine after it has been stored.**
- **Before lubricating the machine, apply the parking brake. A serious accident may occur due to unexpected movement of the machine.**

If the machine will be stored for more than 1 month, observe the following precautions so that its functionality will not be impaired during storage.

Storing the Machine

Item	Remedy
Machine Washing	Thoroughly wash and dry the machine, inspect the undercarriage for any abnormalities, and lubricate all grease points.
Lubrication/Greasing	Check level of lubricant and contamination, and refill or replace if necessary. Lubricate all grease points. After washing and drying the machine, apply a thin coat of anti-rust oil to parts susceptible to rust. (i.e. cylinder rods etc.) Top off the fuel in the fuel tank to prevent rust from forming in it.
Battery	Remove and fully recharge the battery, then store it. Turn the battery disconnect switch to the OFF-OFF position. For information about the battery disconnect switch, refer to section (1-237) “Battery Disconnect Switch”.
Coolant	Add anti-rust agent. If the coolant is likely to freeze, mix in an antifreeze solution, or completely drain the coolant. If the latter is chosen, be sure to place a "No Water in Radiator" sign in the operator's station. If long-life coolant is used, the above measures are not necessary. Also, thoroughly wash the radiator body with water and dry it.
Tires	Inflate to the recommended tire pressure.
Protection Against Dust and Moisture	Store the machine in a relatively dry storage area and cover it.
Tool Box	Inspect and repair, then store.
Lubrication Operation	If the oil film on the metal parts is lost, rust may form. This may cause them to wear abnormally, and cause oil leaks and seizing the next time the machine is operated. To prevent this, operate the air conditioner and lubricate the parts once a month. Be sure to check the coolant level and lubricant conditions before operating. Charge the battery at the same time.
DEF	Store DEF at 40°C or less. DEF may become ammonia when storing it under 40°C for one month or longer. Change DEF if an ammonia odor is detected when opening the tank cap.

IMPORTANT

If the machine is operated without being lubricated and used suddenly as it normally would, the hydraulic components may get damaged due to insufficient engine lubrication.

NOTE

Lubricating operation means a series of warm-up, travel, swing and loading operations carried out repeatedly 2 to 3 times.
Before operating the front attachment and steering wheel, wipe off the anti-rust oil coated on the hydraulic cylinder rods.

Precautions for Simple Inspection of Air Conditioner

If a simple inspection comes due during long-term storage, contact Authorized Dealer.

Use after Long-term Storage

WARNING

- **If lubricating the machine indoors cannot be avoided, ventilate the building properly by opening windows and doors to prevent poisoning by exhaust fumes.**
- **Lubricant properties will deteriorate even if the machine is kept stored. Check all lubricants before operating the machine after it has been stored.**
- **Before lubricating the machine, apply the parking brake. A serious accident may occur due to unexpected movement of the machine.**

IMPORTANT

- **Lubricants deteriorate during long term storage of the machine.**
- **Thoroughly check lubricants and properly lubricate the machine before restarting it. Do not operate the machine suddenly. Sudden operation may damage the engine, hydraulic components, transmission, axle, etc., due to insufficient lubrication.**
- **If the machine has not been lubricated for more than 3 months, start the engine and run it at slow idle speed for 3 minutes. Then, carry out cylinder lubrication.**
  If the engine was suddenly started or the cylinders operated without following the procedure above, it may cause engine seizure and other damage to the machine.
- **When turning the battery disconnect switch from OFF to ON, the preset settings for the radio and clock may reset. Set them again.**

1. Remove covers.
2. Wipe off the anti-rust oil coated on the hydraulic cylinder rods.
3. Fill the fuel tank. Bleed air from the fuel system. Check all fluid levels.
4. Adjust the drive belt tension of the alternator and the AC compressor.
5. Check oil levels and add oil as needed.
6. Install the battery.
   If the machine is equipped with a battery disconnect switch, turn it ON.
7. Start the engine and run it at half speed for several minutes.
8. Repeat this operation a few times.
9. Stop the engine, and check each component for oil leaks, etc.
10. Replace the fuel filter and engine oil filter with a new one if necessary, and do a full engine oil change.
11. Check clamps of the suction hoses, air cleaner hoses and radiator hoses. Retighten them as needed.

Before operating the machine, carefully read through "Checks Before Starting the Engine" (refer to 3-3) to do the lubrication procedure properly.

Troubleshooting

If any problems with the machine have occurred, repair immediately. Be sure to understand the cause of the problem and take necessary measures to prevent reoccurrence.
If it is difficult to determine the cause, or if measures marked with*must be taken, consult Authorized Dealer.
Never attempt to disassemble, adjust or repair hydraulic or electrical/electronic components.

Engine

Consult Authorized Dealer regarding engine troubleshooting.

Engine Auxiliaries

Problem	Cause	Solution
Batteries fail to charge	Damaged battery separator	Replace
	Faulty regulator	Adjust*1, Replace*1
	Faulty ground line	Repair*1
	Faulty alternator	Repair*1, Replace*1
Batteries discharge quickly after being charged	Shorted cable	Repair*1, Replace*1
	Plates inside the battery are shorting	Repair*1, Replace*1
	Increased sediment in battery	Replace*1
Coolant temperature is too high	Low coolant level	Refill
	Abnormal fan rotation	Repair*1, Adjust*1
	Damaged rubber hose	Replace*1
	Faulty thermostat	Replace*1
	Faulty coolant temperature gauge	Replace*1
	Abnormal radiator cap seal	Replace
	Radiator fin is clogged	Clean

*1: Consult Authorized Dealer.

Impossible to Start the Engine

Problem	Cause	Solution
Starter motor does not spin	Battery voltage is low	Charge the battery, Replace
	High resistance in the starter circuit	Battery terminal*1, Wash the starter motor terminal *1, Retighten*1
	Damaged key switch	Replace*1
	Damaged wire harness	Repair*1, Replace*1
	Damaged battery relay	Replace*1
	Severed slow blow fuse link	Replace*1
	Forward/reverse lever is in either the forward or reverse position	Place the lever in neutral
	Faulty starter motor	Repair*1, Replace*1
	Battery Disconnect Switch is in the OFF position	Turn the disconnect switch to the ON position
The starter motor spins, but the engine does not start	Poor quality fuel used, low amount of fuel, no fuel	Replace fuel, Refuel
	Damaged intake air heater	Replace the intake air heater
	Air bubbles in the fuel supply lines	Air bleeding
	Faulty injection pump or nozzle	Repair*1, Replace*1
	Decreased compression pressure	Adjust*1
Engine speed does not increase	When F, R or parking is canceled or the fan reverse rotation switch is turned OFF during fan reversal	Return fan speed to normal rotation Refer to “Fan reverse rotation switch” (1-128)
	DEF tank is empty	Refill with DEF
	The accelerator pedal functions abnormally	Replace the accelerator pedal
The engine starts, but its running speed is low and it quickly stalls	Deteriorated engine oil	Change the engine oil
	Injection nozzle is dirty	Replace*1
	Clogged fuel filter	Replace
	Clogged feed pump strainer	Wash
	Air bubbles in the fuel supply lines	Perform air bleed

*1: Consult Authorized Dealer.

Control Lever

Problem	Cause	Solution
Hard to move	Faulty electrical loading control lever	Individual components for the electrical loading control lever cannot be repaired or replaced. Replace the lever assembly.*1
Does not move smoothly		
Does not return to neutral		
The lever is tilted in the neutral position due to increase in play		

*1: Consult Authorized Dealer.

Hydraulic System

When the machine is stored without running for a long period, air mixed in hydraulic oil will separate and accumulate in the upper part of cylinders, causing a delay in the response time of machine movements and/or weak power.

If these symptoms appear, operate all actuators repeatedly several times.

Problem	Cause	Solution
Loader front attachment does not work (Noise from pumps)	Faulty hydraulic pump	Repair*1, Replace*1
	Lack of hydraulic oil	Refill
	Broken suction pipe and/or hose	Repair*1, Replace*1
No actuators have any power	Malfunction due to worn hydraulic pump	Replace*1
	Decreased main relief valve set pressure in the control valve	Adjust*1
	Lack of hydraulic oil	Refill
	Clogged suction filter in the hydraulic oil tank	Clean
	Absorption of air from the oil suction side	Retightening
Only one actuator is inoperable	Broken control valve spool	Replace*1
	Embedded foreign matter in valve spool	Repair*1, Replace*1
	Broken pipe and/or hose	Repair*1, Replace*1
	Loose pipe line joint	Retightening
	Broken O-ring at pipe line joint	Replace*1
	Broken actuator	Repair*1, Replace*1
Only one cylinder is inoperable. or has no power	Broken oil seal in cylinder	Repair*1, Replace*1
	Oil leak due to damage to cylinder rod	Repair*1, Replace*1
Hydraulic oil overheats	Stained oil cooler	Clean
	Faulty fan motor, pump	Repair*1, Replace*1
	Abnormal fan rotation	Repair*1, Adjust*1
Oil leak from low pressure hose	Loose clamps	Retightening
	Faulty suction pipe	Repair*1, Replace*1

*1: Consult Authorized Dealer.

Drive Function

Steering

Problem	Cause	Solution
Steering is stiff	Faulty hydraulic pump	Repair*1, Replace*1
	Faulty all-hydraulic steering	Repair*1, Replace*1
	Decreased relief valve pressure	Adjust*1
	Faulty steering column	Repair*1, Replace*1
Steering wheel jabs in opposite direction when turning	Faulty all-hydraulic steering	Repair*1, Replace*1

*1: Consult Authorized Dealer.

Accelerator Pedal

Problem	Cause	Solution
Hard to move	Rusted joint	Lubricate*1, Repair*1
Excessive play	Worn joint	Replace*1, Repair*1

*1: Consult Authorized Dealer.

Parking Brake

Problem	Cause	Solution
Brake does not disengage (stuck, drags)	Oil leakage due to defective seal for the parking brake piston	Repair*1, Replace*1
	Faulty disc brake	Repair*1, Replace*1
	Malfunction of parking brake solenoid valve	Repair*1, Replace*1
Parking brake does not work properly	Worn or damaged brake spring for the disc brake	Replace*1
	Faulty brake of the disc brake	Replace*1
	Seized or sticking piston, worn disc	Repair*1, Replace*1
	Malfunction of parking brake solenoid valve	Repair*1, Replace*1

*1: Consult Authorized Dealer.

Service Brake

Problem	Cause	Solution
Brake does not work properly	Brake valve malfunction	Repair*1, Replace*1
	Brake line oil leakage, aeration	Repair*1, Air bleeding*1
Parking brake drags	Brake valve malfunction	Repair*1, Replace*1
	Brake pedal malfunction	Repair*1, Replace*1
Brake fluid (hydraulic oil) is low	Oil leakage from the brake lines and hose fittings	Retighten*1, Repair*1
	Oil leakage due to damaged brake piston seal (inside axle)	Repair*1, Replace*1

*1: Consult Authorized Dealer.

Transmission

Problem	Cause	Solution
Noisy transmission	Lack of transmission oil or poor oil quality	Refill, Replace with new oil
	Worn components inside the transmission	Repair*1, Replace*1
	Broken gear and/or bearing	Repair*1, Replace*1
Hydraulic oil overheats	Abnormal fan rotation	Repair*1, Adjust*1

*1: Consult Authorized Dealer.

Propeller Shaft

Problem	Cause	Solution
Propeller shaft wobbles	Bent propeller shaft	Repair*1, Replace faulty part*1
	Loose part, imbalanced part	Retighten*1, Adjust*1
Propeller shaft is noisy	Excessively worn spline	Replace*1
	Worn or seized spider bearing	Replace*1
	Loosened parts	Retighten*1
	Poorly greased lubrication points	Greasing

*1: Consult Authorized Dealer.

Front Axle, Rear Axle

Problem	Cause	Solution
Noisy	Worn or broken gear	Replace*1
	Lack or deterioration of gear oil	Refill, Replace
	Worn bearings, excessive play	Replace*1
	Excessive shaft spline play	Repair*1, Replace*1
Does not transmit motive power	Damaged shaft	Replace*1
	Broken gear	Replace*1

*1: Consult Authorized Dealer.

Others

The machine may have an abnormal noise, excessive vibration, and abnormal smell when any trouble occurs. Always beware of the machine conditions during operation.

Standard Specifications ZW140-7, 160-7

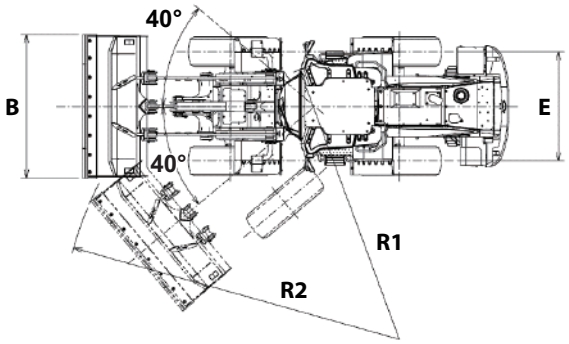

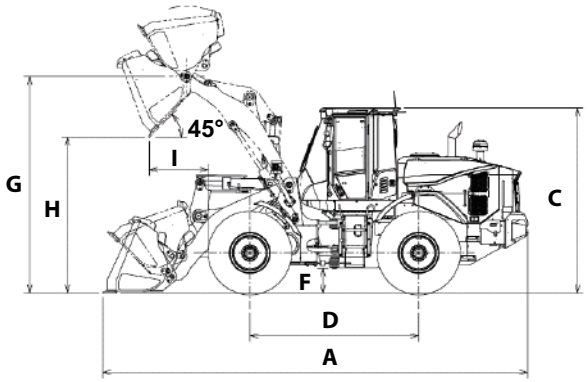

MNTL-12-001-1 ja

Model	-	ZW140-7	ZW160-7
Bucket Capacity: heaped	m^3	2.0*1	2.5*1
Operating Weight	kg	11840	12930
Tipping Load (Fullturn)	kg	8240	9320
Engine		CUMMINS B4.5	CUMMINS B4.5
A : Overall Length	mm	7220	7475
B : Overall Width (Bucket)	mm	2480	2690
C : Overall Height	mm	3275	3275
D : Wheel Base	mm	3000	3000
E : Tread	mm	1930	1930
F : Ground Clearance	mm	425	425
G : Bucket Hinge Height	mm	3800	3835
H : Dumping Clearance (45 °)	mm	2865	2825
I : Dumping Reach (45 °)	mm	890	995
R1 : Minimum Rotation Radius	mm	5085	5085
R2 : Minimum Rotation Radius	mm	5860	6025
Travel Speed Forward/Reverse	km/h	39/39	39/39
Transmission Speeds (F/R)	-	4/4	4/4
Articulation Angle (Left/Right) deg	(°)	40	40
Tire Size	-	20.5 R25 (L3)	20.5 R25 (L3)

NOTE

- **1 BOC (Bolt-On Cutting Edge)*
- *These specifications are subject to change without notice.*

Standard Specifications ZW160PL-7

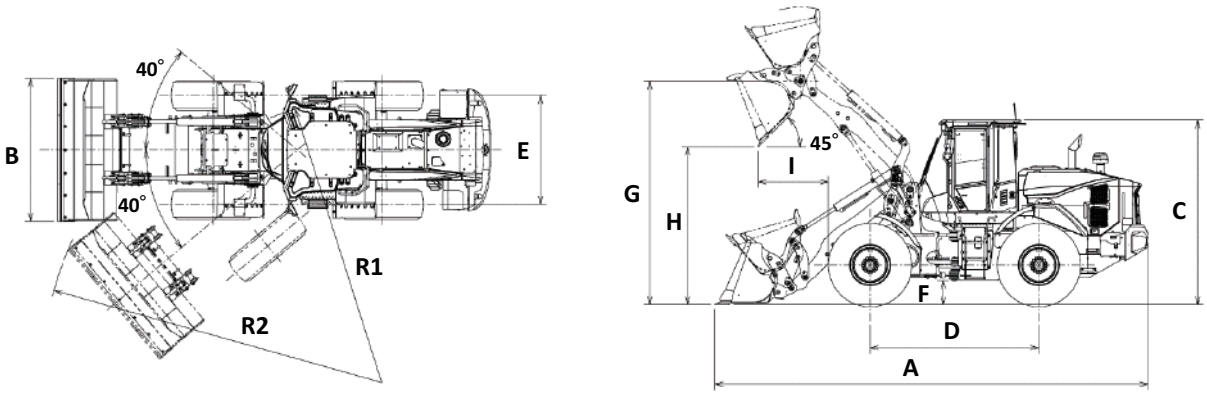

MNTL-12-002-1 ja

Model	-	ZW160PL-7
Bucket Capacity: heaped	m^3	2.1*1
Operating Weight	kg	13560
Tipping Load (Fullturn)	kg	7930
Engine		CUMMINS B4.5
A : Overall Length	mm	7700
B : Overall Width (Bucket)	mm	2535
C : Overall Height	mm	3275
D : Wheel Base	mm	3000
E : Tread	mm	1930
F : Ground Clearance	mm	425
G : Bucket Hinge Height	mm	3970
H : Dumping Clearance (45 °)	mm	2800
I : Dumping Reach (45 °)	mm	1250
R1 : Minimum Rotation Radius	mm	5085
R2 : Minimum Rotation Radius	mm	5990
Travel Speed Forward/Reverse	km/h	39/39
Transmission Speeds (F/R)	-	4/4
Articulation Angle (Left/Right) deg	(°)	40
Tire Size	-	20.5 R25 (L3)

NOTE

- **1 BOC (Bolt-On Cutting Edge)*
- *These specifications are subject to change without notice.*

Noise Level Inside of Cab

LpA: Noise level inside of cab (ISO 6396: 2008)

	LpA [dB(A)]
ZW140-7	66
ZW160-7, ZW160PL-7	67

Operation of Quick Coupler (Hydraulic Type)

WARNING

Keep personnel away from the machine when replacing the attachment. Pin removal and installation can be accomplished from the operator's station.

The quick coupler system simplifies the task of switching between the loader bucket attachment and other attachments.

Removal

WARNING

Apply the parking brake before exiting the machine.

Before removing the attachment, disconnect the hydraulic hoses connected to the attachment cylinders, except those for the bucket and lift arm cylinders.
If at all possible, place the bucket (attachment) that will be removed on a platform such as a pallet.

1. Place the bucket level onto the platform and hoist it up to a height of about 200 mm.

IMPORTANT

When the engine is started, pin (4) may move due to accumulated pressure. Make sure to fully remove pin (4).

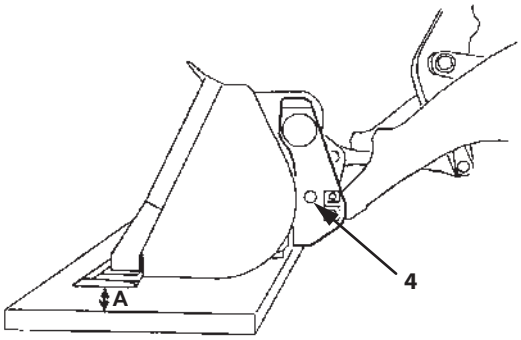

ZW140-7, 160-7

M4GB-13-001-3 ja

A: 200 mm

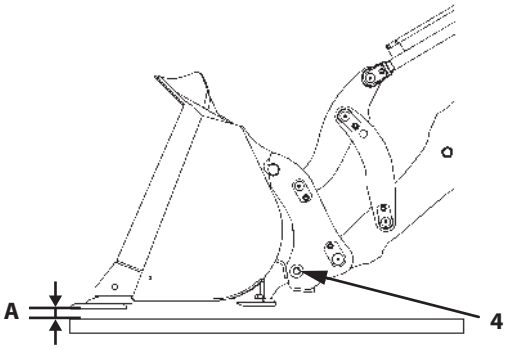

ZW160PL-7

M4GB-13-029-1 ja

A: 200 mm

2. Operate the coupler cylinder with hydraulic coupler switch (1) to remove pin (4).
   While sliding pilot shut-off switch (2) to the removal position side, continue to press removal position (3) to remove pin (4).

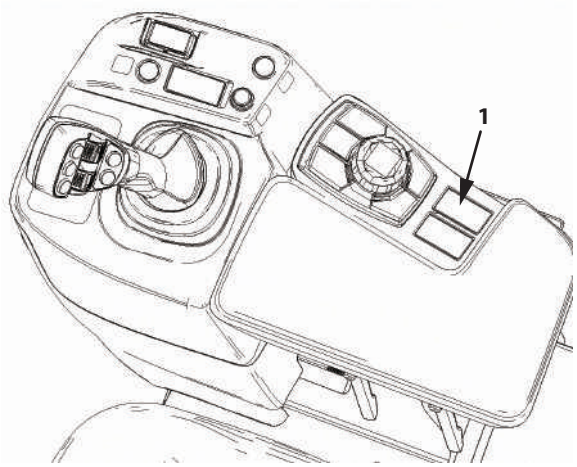

MNTL-01-054-2 ja

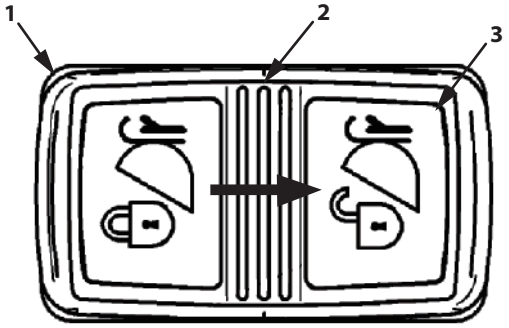

MNUD-13-001-2 ja

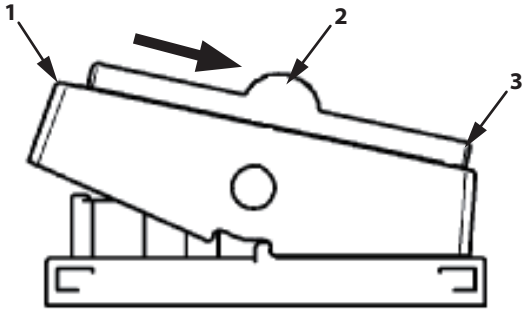

MNTL-13-001-1 ja

3. (only ZW160PL-7)
   Confirm that the pin is in the UNLOCK position using indicator bar (5).

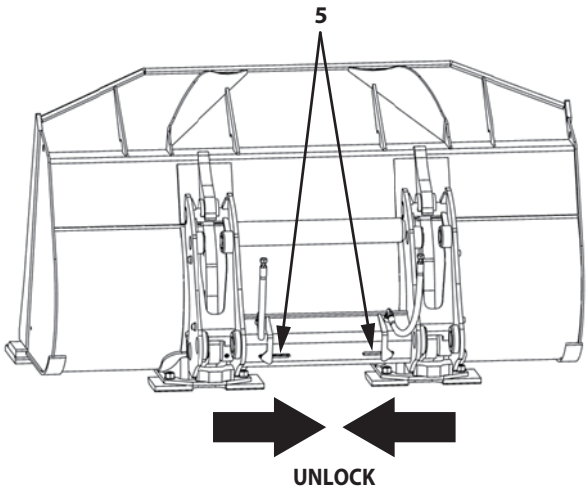

ZW160PL-7

MNTK-13-001-1 en_GB

4. To allow pin (4) to be removed, position the bucket (attachment) as close to the rear of the pallet as possible.
5. While slowly lowering the arm, tilt the bucket forward by operating the bucket cylinder to allow the bucket to come off the quick coupler.

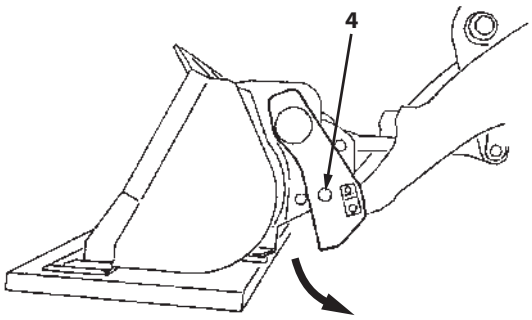

M4GB-13-002-1 ja

Installation

WARNING

- **Installation is complete only after checking that pins (1) (left, right) have been installed.**
- **Apply the parking brake before exiting the machine.**

IMPORTANT

- **To prevent scoring when fitting the attachment, apply grease to the surface of pin (1). Also, apply grease to prevent rusting.**
- **Before installing the attachment, remove pins (1) by operating the hydraulic coupler switch. If pins (1) were removed before stopping the engine, pins (1) will move when restarting the engine.**

NOTE

In case the newly installed attachment utilizes an additional hydraulic cylinder other than the bucket cylinder and/or lift arm cylinder that are already installed, connect the hydraulic hoses to the additional cylinder(s) beforehand.

1. After checking that pins (1) are removed, slowly bring the machine close to bucket (attachment) hook (3) and install the quick coupler to the hook.

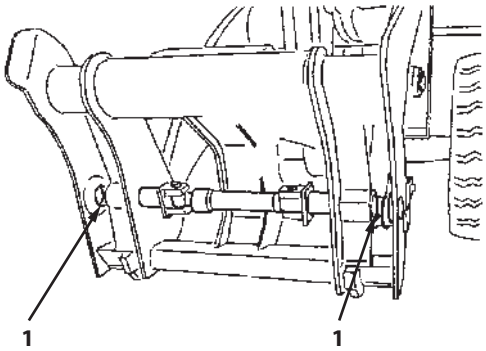

M4GB-13-003-2 ja

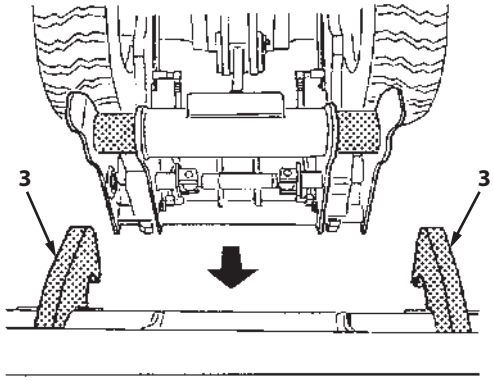

M4GB-13-004-1 ja

2. Slightly raise lift arm (4). Slowly tilt the bucket (attachment) backward until stopper (5) touches the coupler.

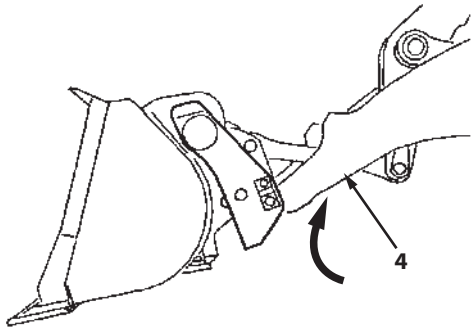

ZW140-7, 160-7

M4GB-13-005-1 ja

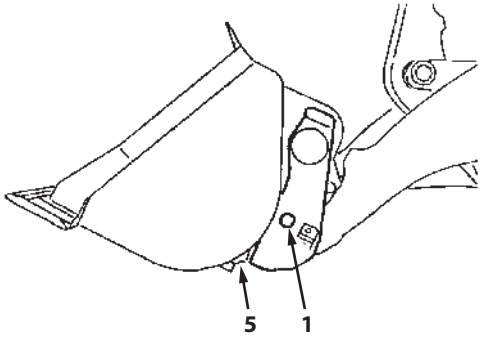

ZW140-7, 160-7

M4GB-13-006-1 ja

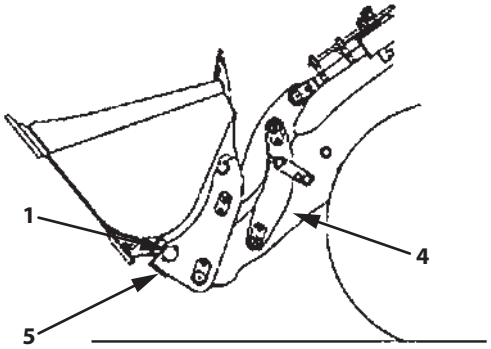

ZW160PL-7

MPD8-13-001-1 ja

3. While sliding lock plate (6) toward you, continue to press installation position (7) to install pin (1).

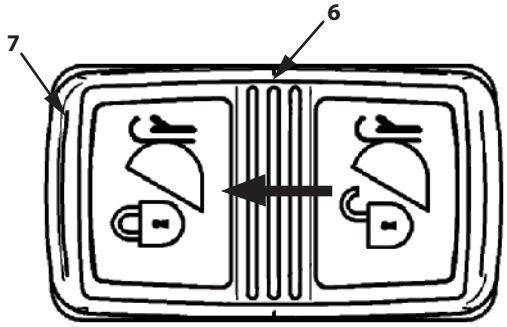

MNUD-13-001-1 ja

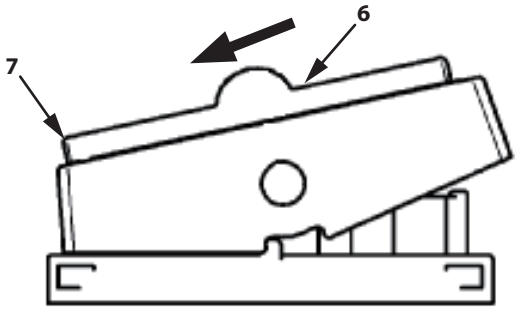

MNUD-13-003-1 ja

4. (only ZW160PL-7)
   Confirm that the pin is in the LOCK position using indicator bar (8).

IMPORTANT

When a new bucket is installed, do the following tutorials.

- Cylinder Length at Bucket Dump Stopper Contact Tutorial(1-102)
- Cylinder Length at Bucket Crowd Stopper Contact Tutorial(1-103)
- Payload Checker Empty Tutorial (only ZW140-7, 160-7) (1-104)

NOTE

If pin (1) does not move normally when operating the hydraulic coupler switch, contact Authorized Dealer.

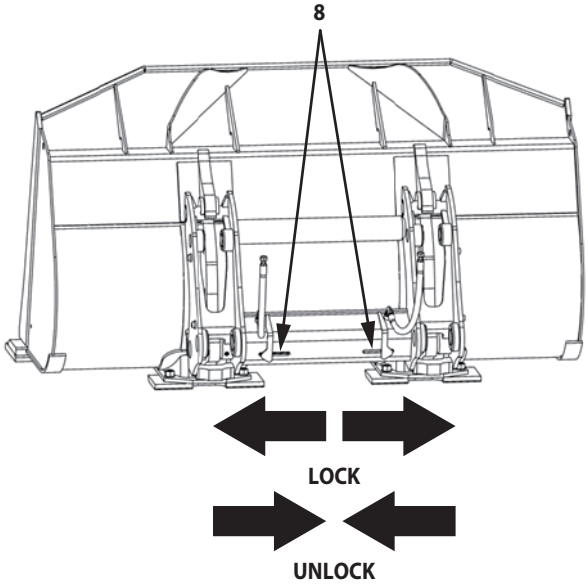

ZW160PL-7

MNTK-13-001-2 en_GB

INDEX

Symbols

1st speed limit switch..... 1-150
24 V power supply socket..... 1-162
3rd/4th lever characteristic mode (optional).....1-98
3rd/4th lever detent setting (optional)..... 1-100
3rd/4th spool control switch (optional)..... 1-158

A

About Aftertreatment Device.....1-3
Accelerator Pedal Operation, Color and Sound of Exhaust Gas.....7-135
Add Mode.....5-79
Add Mode Icon (15).....5-29
Add-truck Mode Select.....5-60
Adjust the Operator's Seat.....S-6
Adjusting the Dual Lift Arm Auto Leveler.....5-4
Adjusting the Operator's Seat.....1-166
Aerial Angle Function (Optional).....1-214
Aftertreatment Device.....7-123
Aftertreatment Device Manual Regeneration..... 5-7
Aftertreatment Device Regeneration Inhibit Switch.....1-134
Aftertreatment Device Regeneration Inhibition... 1-50
Aftertreatment Device Regeneration Switch.....1-135
Air Conditioner.....7-114
Alarm List.....1-77
Amount of Fuel in the Tank.....7-73
Amount to Go/Overload Weight (8).....5-27
Approach Speed Control Switch..... 1-132,5-3
Armrest Adjustment.....1-159
Articulation Lock Bar.....1-239
Auto Air Conditioner.....1-172
Auto Leveler Settings..... 1-86
Auto Shut-Down (Optional)..... 5-5
Auto Shut-Down ON/OFF (Optional)..... 1-125
Auto Shut-Down Time Setting.....1-93
Auto-Add Mode.....5-79
Avoid Accidents from Backing Up and Turning.....S-17
Avoid Applying Heat to Lines Containing Flammable Fluids.....S-36
Avoid Frequent Bucket Shaking..... 5-11
Avoid Heating Near Pressurized Fluid Lines.....S-36
Avoid High-Pressure Fluids..... S-32
Avoid Injury from Attachment Falling Accident.... S-30
Avoid Injury from Roll Away Accidents.....S-16
Avoid Operating with Unbalanced Loads.....5-11
Avoid Positioning Bucket or Attachment Over Anyone..... S-17
Avoid Power Lines..... S-20
Avoid Reckless Digging Practices..... 5-11
Avoid Sudden Steering Changes and/or Sudden Braking.....5-11
Avoid Tipping.....S-18
Axle Oil.....7-24
Axle Support Pin..... 7-38

B

Basic Operations..... 1-184
Battery.....7-95
Battery Disconnect Switch.....1-237
Before Operation.....5-10
Before Starting the Engine.....3-3
Bell Crank Pin.....7-33
Beware of Asbestos and Silica Dust and Other Contamination.....S-38
Beware of Exhaust Fumes.....S-35
Bluetooth® connections.....1-196
Brake Pedal.....7-40
Brake Pedal Linkage.....7-40
Brake System.....7-104
Brightness Adjustment..... 1-49
Brightness Adjustment Procedure..... 1-112
Bucket Cylinder Pin..... 7-32
Bucket Dump Stopper Contact Cylinder Length Learning..... 1-102
Bucket Icon (12).....5-28
Bucket Kick Out ON/OFF, Stop Angle Settings..... 1-91
Bucket Level Gauge (10).....5-28
Bucket Lever Characteristic Mode..... 1-97
Bucket Link Pin.....7-31
Bucket Overload Warning.....5-81
Bucket Payload (1)..... 5-24
Bucket Pin.....7-30
Bucket Tilt Stopper Contact Cylinder Length Learning.....1-103

C

Cab Top Rails..... 1-233
Canceling After Truck Clear.....5-83
Canceling Bucket Payloads..... 5-82
Canceling Payloads..... 5-82
Canceling Truck Load..... 5-82
Caution with an Overhead Obstacle.....S-12
Center Propeller Shaft Spline..... 7-39
Center Propeller Shaft Universal..... 7-39
Change DEF/AdBlue®.....7-127
Change Engine Oil.....7-42
Changing Operator Settings.....1-83

Check Aerial Angle Camera Image (Optional) 7-157
Check Air Conditioner Unit.....7-118
Check Air Intake System.....7-86
Check and Adjust Tire Pressure.....7-108
Check and Clean Aftertreatment Device.....7-123
Check and Clean Muffler Filter Element.....7-123
Check and Clean Rear Obstacle Detection Sensor Face (Optional) 7-157
Check and Replace the Seat and Seat Belt.....7-132
Check Brake Discs (Service and Parking)..... 7-107
Check Braking (Left/Right Interlocked)..... 7-104
Check Bucket Teeth and Cutting Edge..... 7-131
Check Crankcase Breather Tube.....7-44
Check DEF/AdBlue®.....7-125
Check Electrical Wiring and Fuses.....7-103
Check for Damage to Tires.....7-109
Check for Oil Leaks Around the Axle and Cover.... 7-52
Check for Oil Leaks:..... S-33
Check for Short circuits:.....S-33
Check Fuel Hoses..... 7-84
Check Gas Pressure in Accumulator.....7-67
Check Gas Pressure in Ride Control Accumulator.7-67
Check Gas Pressure of the Accumulator..... 7-107
Check Heat Shields:.....S-34
Check Horn and Reverse Buzzer..... 7-102
Check Hoses and Lines..... 7-68
Check Instruments After Starting..... 3-10
Check Key Switch:.....S-34
Check Level of Washer Fluid.....7-133
Check Lines.....7-118
Check Oil Level of Hydraulic Oil Tank..... 7-54
Check Oil Level of Transmission Oil.....7-45
Check Rear Obstacle Detection Sensor System Operation (Optional) 7-158
Check Refrigerant.....7-120
Check ROPS Cab and Resin Cab Roof Damage, Loose Bolts.....7-132
Check the Accumulator for Function, Gas Leakage, Looseness and Damage.....7-106
Check the Amount of Play in Steering Wheel.....7-134
Check the Drive Belt Tension.....7-90
Check the Compressor and Pulley..... 7-122
Check the condenser..... 7-119
Check the Drive Belt.....7-89,7-119
Check the Hour Meter Regularly.....7-5
Check the Parking Brake.....7-105
Check the Pilot Accumulator for Function, Check Gas Leakage, Looseness and Damage...7-65
Check the Ride Control Accumulator for Function, Gas Leakage, Looseness and Damage.....7-66
Checking Panel Switch Settings..... 1-61
Clean and Replace Air Conditioner Filters.....7-114
Clean Engine Compartment and Engine Cover.. 7-138
Clean Rear View Camera and Side Camera (Optional).....7-138
Clean Solenoid Fuel Pump Strainer.....7-82
Clean the Radiator and Oil Cooler..... 7-92
Clean the Transmission Air Breather.....7-52
Clean the Transmission Strainer..... 7-46
Clean up Flammable Materials:..... S-34
Coat Hook..... 1-221
Control Lever Lock..... 5-2
Control Lever Lock Switch.....1-153
Control Panel.....1-180
Cool Head/Warm Feet Mode.....1-177
Coolant Level.....7-88
Cooling System.....7-87
Correct Maintenance and Inspection Procedures...7-1
Cumulative Dump Truck Load (2)..... 5-25
Cylinder End Soft Stop..... 1-99

D

Daily Check of Camera Images for Aerial Angle (Optional).....7-156
Damage or Looseness of Rear View Mirrors..... 7-136
Damage or Looseness of Steps, Handrails and Cab Top Rails.....7-137
Date Settings..... 1-43
Deceleration Mode Switch.....1-124
DEF level low..... 1-34
Defogging the Windows.....1-178
Defroster Operation..... 1-177
Dig with Caution..... S-19
Digging and Loading Accumulated Soil..... 5-12
Digging and Loading Level Ground.....5-13
Digital Audio Broadcasting (DAB)..... 1-187
Digital radio.....1-180
discrepancies between images and actual road surface..... 1-218
display format settings..... 1-45
display items.....1-62
Display Ranges and Default Values.....5-32
displaying control lever setting menus..... 1-95
displaying information menu..... 1-115
displaying sub monitor main menu.....1-75
displaying the display menu.....1-111
displaying the sub monitor basic screen..... 1-65
Dispose of Waste Properly.....S-40
Dozing.....5-18
Drain Fuel Filter of Water.....7-77
Drain Fuel Tank of Water and Sediment..... 7-76

Drive Machine Safely (Work Site)..... S-14
Drive Safely.....S-13
Driving Guidance Info.....4-1
Dump Truck Overload Warning.....5-81

E

Electrical System..... 7-94
emergency evacuation hammer..... 1-221
Emergency Situations..... 4-22
Emergency Steering (Machine Equipped with Emergency Steering).....4-17
Emergency Steering Operation Check Switch (Machine Equipped with Emergency Steering)..... 1-151
Engine..... 7-41
Engine Oil Level..... 7-41
Ensure Safety Before Leaving or Standing up from Operator's Seat.....S-6
Ensure Safety when Operating on Road Shoulders.....5-10
Evacuating in Case of Fire..... S-35
Excavation..... 5-12
external power supply (12 V)..... 1-163

F

fan reverse rotation switch (optional).....1-128
Fasten Your Seat Belt.....S-7
Fastening the Machine for Transport.....6-4
Follow Safety Instructions.....S-2
For Rapid Cooling.....1-178
Forward/Reverse selector switch.....1-130
Frame Center Hinge Pin.....7-37
front attachment control lever..... 1-160
Front Attachment Control Lever.....5-1
Front Console Switches (Illustration Contents)... 1-140
Front Propeller Shaft Universal..... 7-38
Fuel System..... 7-73
fully opening the left door..... 1-227
Function Button Switch.....5-22
fuse box.....1-234

G

General Precautions for the Cab..... S-5
getting ON and OFF the machine..... 1-2
glove compartment (air conditioner cooled/ heated box)..... 1-164
Grading.....5-14
Greasing..... 7-29
Guide Pin (ZW160PL-7)..... 7-31

H

Handle Chemical Products Safely..... S-40
Handle Fluids Safely–Avoid Fires..... S-23
Handle Starting Aids Safely..... S-8
hazard switch..... 1-144
high-low beam switch..... 1-148
horn switch..... 1-146
Hydraulic Circuit Bypass.....6-8
Hydraulic System..... 7-53

I

I-Shape Loading..... 5-17
inside rear view mirror.....1-229
Inspect and Adjust Valve Clearance..... 7-139
Inspect Machine..... S-4
Inspect Machine Daily Before Starting.....1-119,3-1
inspection/maintenance access side cover..... 1-240
Installation.....13-4
Installation and Adjustment of Mirrors..... 1-231
Intended Use.....5
Introduction.....5-21
Investigate Job Site Beforehand.....S-10

J

Jump Starting..... S-9

K

Keep Riders off Machine.....S-12
key switch.....1-149
Kinds of Oils..... 7-23

L

Lamps Light or Flash..... 7-102
language settings..... 1-47
layout (right console) (illustration contents)..... 1-12
layout of equipment in operator's station (illustration contents).....1-10
LCD screen..... 1-182
left cab door..... 1-225
left door open/close lever..... 1-226
Length and Load of Wire Rope/Support bar.....6-13
Lift Arm Cylinder Pin.....7-34
Lift Arm Cylinder Rod Pin.....7-35
lift arm height kick out on/off, stop height settings.....1-87
lift arm lever characteristic mode..... 1-96
lift arm lower kick out on/off, stop height settings.....1-89
Lift Arm Pivot Pin..... 7-36

Lifting Machine....6-12
Lifting Wheel Loader.... 5-19
light switch.... 1-147
Link Pin (ZW160PL-7)....7-33
List of Consumable Parts....7-26
Load and Carrying Method.... 5-16
Load Measurement Procedure....5-37
Loader and Dump Truck Combination Method.... 5-17
Loading....5-15
Loading / Unloading on Trailer.... 6-2
Lock the Frame.... 7-11
Long-Life Coolant.... 7-25

M

Machine Numbers....1
Main Monitor Indicator Lights (Illustration Contents).... 1-14
Maintenance and Inspection Side Covers.... 7-12
Maintenance Guide....7-13
Maintenance Guide Table.... 7-5
maintenance notices.... 1-56
Maintenance Under Special Environmental Conditions.... 9-1
Manual-Add Mode.... 5-80
Material Name Setting....5-41
Material Select.... 5-40
Monitor Functions, Instrument Operation....7-101
monitor panel (main monitor).... 1-14
Move and Operate Machine Safely....S-7
multi-function joystick lever.... 1-160

N

name of components.... 1-173
Name of Components....1-1,1-166
Names of Components.... 7-3
Never Ride Attachment.... S-41
Never Undercut a High Bank.... S-19
Notes on Aftertreatment Device....S-41
Numeric Values and Text Strings (Home Screen).. 5-32
Numeric Values and Text Strings (Settings).... 5-33

O

Object Handling....S-21
off-season air conditioner maintenance....1-179
Operation in Freezing Weather....9-3
operation information....1-116
Operation of Quick Coupler (Hydraulic Type).... 13-1
Operator No. (6)....5-26
operator setting selection (at startup)....1-66
operator settings screen.... 1-81
operator's station equipment....1-162
outside rear view mirror....1-229
overhead switch panel (optional).... 1-224

P

Park Machine Safely.... S-23
Parking....4-21
parking brake switch....1-141
Parking Brake Switch....4-10
Payload Checker....5-51
Payload Checker (ZW140-7, 160-7 only)....1-84,5-21
Payload Checker Function Mode.... 5-74
Payload Checker Function Setting.... 5-52
Payload Checker Menu Operation....5-40
Payload Checker Monitor Display....5-23
Payload Checker Non-Load Learning (ZW140-7,160-7 only).... 1-104
Payload Checker-related Menu Screen Layout.... 5-39
Perform Truck Loading Safely....S-20
Periodic Replacement of Parts.... 7-21
power mode ON/OFF switch....1-133
Powertrain.... 7-45
Practice Maintenance Safely.... S-25
Precautions about Operator's Seat Protections for Falling Objects and when Overturned....S-11
Precautions for Aerial Angle (If Equipped)....S-43
Precautions for After Operations.... 5-20
Precautions for Communication Terminal....S-41
Precautions for Communication Terminal Equipment....S-42
Precautions for Diesel Exhaust Fluid (DEF).... S-37
Precautions for Handling Accumulator and Gas Damper....S-37
Precautions for Lightning.... S-21
Precautions for Operations.... S-9
Precautions for Rear Obstacle Detection System (If Equipped).... S-43
Precautions for Self-Traveling.... 6-6
Precautions for Towing....6-7
Precautions for Traveling.... 4-23
Precautions for Traveling on Slopes....4-25
Precautions for Welding and Grinding....S-36
Precautions to be Taken if Machine Failure Occurs....4-26
Preparations for Inspection and Maintenance.... 7-8
Prepare for Emergencies....S-3
Prevent Battery Explosions....S-39
Prevent Burns.... S-31
Prevent Fires.... S-33
Prevent Parts from Flying....S-30
Progress....5-84

Progress (20)/Progress Level Gauge (21).....5-31
Propeller Shaft Center Support..... 7-38
Protect Against Flying Debris and Falling Object. S-22
Provide Signals for Jobs Involving Multiple Machines.....S-12

Q

Quick Coupler Switch (ZW140-7, 160-7) (Optional).....1-157
Quick Power Switch.....1-156
Quick Wiper.....1-154

R

Rated Payload (4).....5-26
Rear Obstacle Alarm Settings ON/OFF (Optional).....1-108
rear obstacle detection sensor.....1-242
Rear Propeller Shaft Universal.....7-40
Rear Tray.....1-163
Rear View Camera Display Modes..... 1-64
rear view camera monitor reverse interlocking setting (optional).....1-113
Rear View Mirror..... 1-229
Rear View Mirrors Angle Adjustment Switch (Optional).....1-230
Recognize Safety Information..... S-1
Registered Trademarks.....1-187
Releasing the Parking Brake.....6-9
Removal.....13-1
Remove Paint Before Welding or Heating..... S-38
Removing Snow..... 5-19
Replace Air Breather Element.....7-64
Replace Axle Oil.....7-49
Replace Coolant..... 7-91
Replace DEF Supply Module Main Filter.....7-128
Replace DEF Tank Water Supply Inlet Filter..... 7-130
Replace Engine Oil Filter.....7-42
Replace Fuel Pre-Filter Element.....7-81
Replace HST Charge Filter Element.....7-63
Replace Hydraulic Oil Tank Return Filter..... 7-61
Replace Hydraulic Oil/Clean Hydraulic Oil Tank.... 7-55
Replace Main Fuel Filter Element.....7-80
Replace Parking Brake Accumulator..... 7-107
Replace Pilot Accumulator..... 7-66
Replace Pilot Filter.....7-59
Replace Rubber Hoses Periodically..... S-31
Replace the Air Conditioner Receiver Drier..... 7-121
Replace the Transmission Oil Filter.....7-48
Replace Transmission Oil..... 7-46
Retighten the Front Axle Mounting Bolts and Rear Axle Support Mounting Bolts.....7-139
Retighten Wheel Bolts.....7-110
Ride Control Drive Speed Settings..... 1-85
Ride Control Switch..... 1-136
Right Cab Door.....1-228
Right Console and Control Lever Switches (Illustration Contents).....1-152
Right Door Lock..... 1-228
Right Door Open/Close Lever.....1-228
ROPS cab..... 1-219

S

Safety Signs.....S-50
Scooping.....5-18
Seat Pocket..... 1-171
Select Function (Jump).....5-65,5-73
Select Material (ZW140-7, 160-7 only)..... 1-84
Select Target Load (ZW140-7, 160-7 only)..... 1-84
Selecting Forward/Reverse..... 4-16
Service Air Conditioning System Safely.....S-39
Setting Mode.....5-32
Setting Screens..... 1-203
Setting the Clock.....1-41
Settings Menu.....1-93
Shift Switch.....1-145
Shifting.....4-2
Standard Specifications ZW140-7, 160-7..... 12-1
Standard Specifications ZW160PL-7..... 12-2
Start the Engine Only from Operator's Seat..... S-8
Starting in Cold Weather..... 3-9
Starting Off.....4-13
Statistical Data..... 5-62
Statistical Data by Loading Order..... 5-72
Statistical Data by Material.....5-66
Statistical Data by Operator.....5-68
Statistical Data by Target.....5-70
Statistical Data by Truck..... 5-63
Stay Clear of Moving Parts.....S-28
Steering.....4-3
Steering Cylinder Pin..... 7-36
Steering Cylinder Rod Pin..... 7-37
Steps.....1-233
Stopping the Engine.....3-18
Stopping the Machine..... 4-18
Storing the Machine..... 10-1
Sub Monitor..... 1-60
Sub Monitor Basic Screen Configuration..... 1-67
Sub Monitor Basic Screen Displayed Items..... 1-68
Sub Monitor Controller..... 1-60,1-155
Sub Monitor Menu Configuration..... 1-76

Suction Filter Cleaning....7-58
Summary....1-13
Sun Visor....1-222
Support Machine Properly.... S-27
Support Maintenance Properly.... S-29
Switch Panel (Illustration Content).... 1-122
Switching the Monitor Display....1-216

T

Target Load Select.... 5-44
Target Load Setting....5-45
Target Load/Target Load Name (7)....5-27
Target Material (5)....5-26
Target Name Setting....5-48
Target Total Load....5-54
Target Total Load (18)....5-31
Temporary Stopping and Restart of Driving....4-20
Tip-off (Pile) Procedure.... 5-75
Tip-off (Truck) Procedure.... 5-77
Tip-off Mode....5-74
Tip-off Mode Icon (14)....5-29
Tip-off Mode Select....5-58
Tips for Optimal Air Conditioner Usage.... 1-178
Tire Removal and Mounting....7-113
Tires.... 7-108
Tool Box....1-241
Total Load (19)....5-31
Total Loads Count (16).... 5-30
Towing Method.... 6-11
Towing Pin.... 1-241
Traction Control Switch....1-127
Transmission Oil.... 7-24
Transport Safely....S-24
Transporting by Road.... 6-1
Transporting by Trailer.... 6-1
Transporting Wheel Loader (Urgent Situation)....6-6
Travel on Public Roads Safely.... S-16
Traveling in Water or on Muddy Terrain.... 4-24
Tray and Drink Holder....1-164
Troubleshooting.... 1-52,1-117,11-1
Truck Level Gauge (11)....5-28
Trucks Count (17).... 5-30

U

Understand Signal Words....S-1
Urea SCR System....7-124
USB device connections.... 1-200
USB power supply....1-165
Use Handrail and Steps.... S-5
Using Booster Cables....3-12
Using the AM/FM Radio.... 1-192

V

V-Shape Loading....5-17
Vandal-Proofing Equipment....1-244

W

Warm-Up Operation.... 3-15
Warm-Up Procedure in Cold Weather....3-16
Warming Up Settings ON/OFF....1-110
Warn Others of Service Work....S-27
Wear Appropriate Clothing.... S-3
Weighing Flowchart....5-35
Weight of Last Bucket Loaded (9).... 5-27
When the Engine Stalls while Traveling....4-22
Window Lock Levers....1-226
Work Light Switch.... 1-143

Z

Zero Calibration....5-56